Capital Projects
& Construction

TECHNICAL DESIGN STANDARDS

Revision 6, July 2025

Portland State
UNIVERSITY

INTRODUCTION

Revision 6, July 2025

Dear User,

Portland State University strives to create a quality environment for all students and users of its facilities. The Capital Projects and Construction Department (CPC), as part of PSU's Office of Planning, Construction & Real Estate, manages all renovation and construction projects on the PSU Campus. We approach this responsibility with enthusiasm, which is reflected in our department's mission: "To design and build a modern, sustainable campus that enhances our student learning experience and reinforces the academic mission".

With the goal of clearly and concisely communicating our standards, including preferences and recommendations, to the teams of Consultants and Contractors who work on our projects, we present these Technical Design Standards. The Standards are divided into sections that follow the Construction Specifications Institute (CSI) standards. This format facilitates the use and familiarity by the design and construction professionals.

The focus of the Design Standards reinforces PSU's vision to create facilities which have the following characteristics:

- **Adaptability**
  Over the course of their lifetime, PSU buildings, may be re-purposed for uses that were likely not considered at the time of their design. As such, all buildings must be designed in such a way as to allow for changes in purpose and occupancy.
- **Durability**
  PSU buildings need to be resilient. As some of the most heavily and intensely used public buildings in the state, they must be designed to meet dense use. This means all materials and systems must be durable, repairable, and easily maintainable. In addition, State funding for deferred maintenance is scarce, making durability especially important.
- **Maintainability**
  PSU has limited resources to allocate to the on-going maintenance of its facilities. Therefore, its buildings and components must be designed to be maintainable using the lowest reasonable amount of resources. For example, inaccessible fixtures and equipment requiring constant servicing should not be included in designs.
- **Timeless Design**
  PSU buildings must be designed with the highest sense of aesthetics. The University's status as a premier educational institution in the heart of Portland requires that its facilities reflect this philosophy.
- **Sustainability**
  PSU intends that its buildings not only meet the highest level of current sustainable design, but also reflect innovation in this regard. Therefore, targeting the highest degrees of efficiency in resources and simplicity of processes is required for all campus design and construction activities.

  The " " icon represents standards, products and any other design or construction related items that show PSU's commitment to building, living, and learning in a sustainable environment.

- **Energy Efficiency**
  PSU sustainability goals and efforts to become carbon neutral require that all buildings and major remodels be designed and engineered to be as energy efficient as possible. This should be done while providing the necessary level of comfort for the Campus community.
- **Innovation**
  PSU, as a leading community institution, must strive for innovation in all construction projects. It must be at the forefront of advocating for the use of innovative design, construction techniques, and building systems.
- **Environmental Health & Safety**
  If possible, toxic and hazardous materials should be eliminated from construction materials and components. Preventing the exposure of building occupants to unhealthy materials is very important to the University.

At CPC we learn from every new project. We believe that the collaboration and input of the in-house team of professionals from various Departments is extremely valuable, and we constantly encourage their participation and input. Hence, our Technical Design Standards mission is not a finished and timeless document; it is intended to be reviewed and re-issued every 6 months by our Department as a result of lessons learned from our projects and industry practices, as well as new technologies in construction. In striving for constant improvement, we welcome your feedback. Text printed in blue represents content that has been added in the most recent issue of the Technical Design Standards.

We are excited about our Department's role in shaping the PSU-of-the-future, while preserving the good things we have today. We are pleased to share this document with our partners and hope it can be used to fulfill our Department's mission.

Sincerely,

The Staff of the Capital Projects & Construction Department

Table of Contents

Cover
Introduction
Table of Contents
Appendices
01 10 00 - General Requirements
01 10 02 - Accessibility and Universal Design
01 10 03 - Percent for Art
01 35 23 - Safety Requirements
01 58 00 - Temporary Signage
01 74 00 - Cleaning and Waste Management
01 81 13 - Sustainable Design Requirements
01 83 00 - Facility Shell Performance Requirements
02 00 00 - Existing Conditions, Remediations and Demolition
03 00 00 - Concrete
04 00 00 - Masonry
05 00 00 - Metals Structural, and Architectural
05 70 30 - Decorative Metal Deterrents
06 00 00 - Rough Carpentry
07 00 00 - Thermal and Moisture Protection
08 10 00 - Doors and Frames
08 50 00 - Windows
08 71 00 - Door Hardware
09 60 00 - Flooring
09 70 00 - Wall Finishes, Acoustic Treatment, and Partitions
09 90 00 - Paints and Coatings
10 14 00 - Signage
10 20 01 - Lactation Rooms
10 28 13 - Toilet Accessories
11 12 00 - Parking Control Equipment
11 90 00 - Miscellaneous Equipment
12 30 00 - Casework
12 46 19 - Clocks
13 12 13 - Exterior Fountains
14 00 00 - Conveying Equipment
21 00 00 - Fire Suppression
22 00 00 - Common Work Results for Plumbing
22 10 00 - Plumbing Piping

22 30 00 - Plumbing Equipment
22 40 00 - Plumbing Fixtures
23 00 00 - HVAC Common Work, and Miscellaneous
23 09 00 - Instrumentation and Control for HVAC
23 20 00 - Piping and Pumps
23 30 00 - HVAC Air Distribution
23 70 00 - Central HVAC Equipment
26 05 00 - Common Work Results for Electrical
26 05 53 - Identification for Electrical Systems
26 50 00 - Lighting
27 05 00 - Common Work Results for Communications
27 05 26 - Grounding and Bonding for Communication Systems
27 05 28 - Pathways for Communications Systems
27 05 36 - Cable Trays for Communication Systems
27 11 00 - Communications Equipment Room Fittings
27 13 00 - Communications Backbone Cabling
27 15 00 - Communications Horizontal Cabling
28 10 00 - Access Control
28 46 00 - Fire Detection and Alarm
32 10 00 - Tree Care Plan
32 14 43 - Porous Unit Paving
32 17 00 - Paving Specialties
32 33 10 - Site Bicycle Storage
32 84 00 - Planting Irrigation
32 90 00 - Planting
Appendices

Appendices

01.1 Environmental Health & Safety Laboratory Standards (In Progress)
01.2 Climate Action Plan
01.3 Office Standards
01.4 Classroom Standards
01.5 Furniture Standards
01.6 All-User Restroom Plan
01.7 Solid Waste Management Plan
10.1 Signage and Wayfinding Standard
10.2 Identity Standard
26.1 Energy Conservation Guidelines
27.1 Instructional Technology Guidelines

SECTION 01 10 00 - GENERAL REQUIREMENTS

PART 1 - GENERAL

1.1 SUMMARY

A. Standards of Performance
   1. Capital Projects & Construction (CPC) strives to provide and improve access to all for a quality education, including students, faculty, staff and the general campus community. As such these standards are to be used as follows:
      a. These standards are intended for use as guidelines for construction, materials, and installations on campus. Product installations and other related work shall match existing materials, unless approved otherwise by Portland State University (PSU) CPC Project Manager (PM).
      b. While these standards are approved as department standard, exceptions may be made by PSU CPC PM as necessary

B. General Conditions for Public Improvement Contracts
   1. Contractor shall conform to the applicable PSU General Conditions for Public Improvement.

1.2 CODES

A. All Design and Construction shall conform to the most recent adopted laws, codes, rules, ordinances, amendments, requirements, as well as Environmental and Waste Management regulations for all pertaining Government jurisdictions, University authorities, and documents including but not restricted to the following:
   1. ADA Standards for Accessible Design – latest edition
   2. City of Portland Codes and Ordinances
   3. City of Portland Parks and Recreation Urban Forestry Divisions
   4. Environmental Protection Agency (EPA)
   5. Oregon Department of Environmental Quality
   6. Oregon Occupational Safety and Health Administration
   7. Oregon OSHA Hazard Communication Standard
   8. Oregon Structural Specialty Code - latest edition
   9. Portland State University Contract Documents
   10. Portland State University Environmental Health and Safety (EHS) Standards
   11. Portland State University Physical Facilities Space Planning and Inventory Manual - PSU Office of Campus Planning and Design
   12. State Historical Preservation Office (SHPO)
   13. State of Oregon Codes and Ordinances
   14. Technical Design Standards, Portland State University
   15. The Portland State University General Conditions for Public Improvement Contracts
   16. Local and State requirements for Tree Protection

1.3 RELATED SECTIONS

A. Sections, appendices, and PSU documents referenced in this section include:
   1. PSU General Conditions
   2. Section 013300 Submittal Procedures
   3. Section 016000 Product Requirements
   4. Section 017400 Cleaning and Waste Management
   5. Section 018113 Sustainable Design Requirements
   6. Appendix - Environmental Health & Safety

1.4 PARKING

A. All parking is to be arranged and paid for by the Contractor. Please note that PSU Transportation and Parking Services will no longer issue parking permits for design firms and contractors (company vehicles or personal vehicles) for any PSU parking lots. In all cases use of public transportation and/or carpooling is strongly encouraged

1.5 NOISE/QUIET HOURS

A. Contractor to conform to all quiet hours required for tenants by CPC PM and noise requirements for the City of Portland.

B. Interior work involving loud impact noises shall be coordinated and scheduled around users.

C. Coordinate noisy work in and around housing buildings with the Housing office and staff to not disturb residents during restricted hours.

1.6 KEYS-LOCK

A. Contractor to order keys for spaces that he or she needs to access via PSU Key Request Form. Contractor to provide payment, deposit, and processing of PSU key request forms to receive PSU keys.

1.7 COORDINATION OF WORK

A. Integrated Design Process
   1. Design Lead (e.g. Architect) shall engage interested parties for programming, coordination, and review processes; Implement Integrated Design Process from early pre-design stage through the entire design process; Identify opportunities for innovative design through synergies across disciplines and building systems to improve building performance, occupant well-being, and environmental benefits.

B. Structural Engineer Approvals
   1. Penetrations of Structure by Contractor: Any Penetration of Structure, including anchoring, coring, scraping, cutting, or removal is not permitted unless approved by a Structural Engineer that is licensed in the State of Oregon. Upon the Structural Engineer's determination, work shall be subject to special inspection and/or certified location services and reports to determine location of steel reinforcing. Any existing irregularities, flaws, or wear of structure that is uncovered or discovered by Contractor during the process of the work shall be immediately reported to Structural Engineer and subject to the Structural Engineer's review and recommendations.

C. Security Design Strategies
   1. Security: Design of new buildings and major renovations shall consider safety and visibility in order to limit the need for security cameras. Consider principles from Crime Prevention Through Environmental Design - Refer to Appendix 01.2 - Exhibit A: City of Portland CPTED Definition and Policy Strategies.

D. Document Control
   1. For medium to large projects, it is PSU's preference to use Procore, Autodesk, or similar for document control. On small projects, confirm preferred method of document control with PSU project manager.

1.8 LEED CERTIFICATION

A. Larger Capital projects are required by PSU to be certified by the LEED rating system. Confirm with PSU PM if project qualifies.

B. For smaller projects, LEED may be used as a guide for aspects such as materials selection or recycling.

1.9 INFORMATION TRANSMITTAL

A. Building Information Modeling (BIM)
   1. BIM will be required for all full building renovations or new buildings with a value greater than $5 Million.
   2. Provide final BIM mode, in Revit format, to PSU PM and BIM Coordinator for in-house use. Include PSU BIM Coordinator in discussions during development of final model, coordinate with outside Design Consultants & Contractors and include as many disciplines and systems available.

B. CAD Electronic Drawings (2-D)
   1. Provide clean copy of final as-built CAD drawings from all disciplines involved at end of design or construction. Include asbuilt conditions at end of Construction.

2. If PDF record drawings were developed during Construction, provide record set of PDFs including all links to RFI's etc.

C. Dimensions
1. All drawing dimensions shall have preference over scaled dimensions.

1.10 FINAL ACCEPTANCE

A. Project Completion Quality
1. All work shall be completed to provide a new, clean, patched, repaired, painted or finished, working and watertight installation per industry standard for Institutional Facilities. Include finishing /cleaning of carpet, walls, ceilings, equipment, exposed mechanical/electrical items, fixtures and furnishing, and final treatment of floors.

B. Final Working Installation
1. Contractor to reconfigure and reconnect existing and new items including utilities, controls, detectors, alarms, exit lighting, strobes, electrical lights, power, switches, mechanical diffusers, ducting, sprinklers, data, plumbing, water, sewer, and venting for a complete working installation.

C. Clean-up
1. Contractor to provide for complete cleanup of work site at regular intervals. For additional requirements, please refer to Cleaning and Waste Management section.
2. Include requirement for Contractor to provide final clean up before turn over of project to Owner.

D. User Guide
1. A User Guide shall be developed in conjunction with the Design Team & PSU PM to aid in the use of unique features of a building. This Guide shall be in addition to a typical O&M manual for use by facilities and maintenance staff in their operation of the mechanical and electrical systems throughout the building.

PART 2 - PRODUCTS - Not Used

PART 3 - EXECUTION

3.1 INSTALLATION AND APPLICATION

A. Coordination
1. Contractor to review all documents and coordinate all work with subcontractors including other PSU contractors and consultants and PSU crews involved in the project.

B. Existing Conditions
1. Contractor to field-verify all existing conditions including, but not limited to, dimensions prior to fabrication and installation.
2. For all existing structures for which concrete test data is not available, testing of existing concrete strength is required.

C. Verify/Protect Existing
1. Prior to starting field work, contractor to verify and document all existing conditions including compiling digital photographs. Contractor to protect existing building, property, structure, and utilities from damage, and replace to existing condition if damaged during construction.

D. Installation
1. All equipment, appliances, furnishings, cabinets, and product items to be installed according to manufacturer's specifications and recommendations for installation, and to meet all codes for a finished workable product assembly which includes ADA, structural, fire, and safety regulations.



E. Recycling Plan
1. Contractor to complete and submit the Pre-construction recycling plan/applications as required by the City of Portland and provide a copy to CPC PM. For additional requirements refer to Cleaning and

Waste Management section. Coordinate with LEED requirements for Recycling when project is seeking certification.

F. Safety During Construction
1. Contractor to provide building safety for tenants and pedestrians to include complete fire, fume, dust, noise control, protection, and temporary signage as required during construction.

G. Product Odors
1. Specify products that can be installed with limited odors at both exterior & interior locations. i.e. Low VOC content products.
2. Specify materials and systems that can be ventilated to the exterior during installation.
3. Specify exterior materials that have minimal odor / vapor that could be an irritant when pulled into a building.
   a. Minimize specification and use of products such as hot tar for water proofing on exterior walls or roofs. Seek to specify single membrane roofing or fully adhered water proofing sheets instead.
   b. Minimize specification and use of high VOC waterproofing sealants on brick and masonry.

END OF SECTION 011000

SECTION 01 10 02 - ACCESSIBILITY AND UNIVERSAL DESIGN

PART 1 - GENERAL

1.1 SUMMARY

A. Purpose
1. In the pursuit of becoming a fully accessible campus, Portland State University expects all consultants and service providers to design to 2010 ADA Standards for Accessible Design and the latest adopted edition of the Oregon Structural Specialty Code (OSSC) and to exhibit a commitment to employing Universal Design principles in their service and product delivery.
2. All consultants and designers shall design to Portland State University's Accessibility and Universal Design Standards.
3. Consultants shall engage with project representatives on how Universal Design principles shall enhance accessibility and create a campus that is accessible to everyone.

B. Related Sections
1. Div. 05 - Metals
2. Div. 08 - Openings
3. Div. 10 - Specialties
4. Div. 12 - Furnishings
5. Div. 14 - Conveying Equipment
6. Div. 22 - Plumbing
7. Div. 26 - Electrical
8. Div. 28 - Electronic Safety & Security
9. Div. 32 - Exterior Improvements
10. Appendix - Instructional Technology Guidelines
11. Appendix - Classroom

1.2 APPLICABLE CODE, GUIDELINES AND STANDARDS

A. All Design and Construction shall conform to the most recent adopted laws, codes, rules, ordinances, amendments, requirements, as well as Environmental and Waste Management regulations for all pertaining Government jurisdictions, University authorities, and documents including but not restricted to the following:
1. ADA Standards for Accessible Design – latest version
2. Oregon Elevator Specialty Code – latest version
3. Oregon Structural Specialty Code (OSSC) – latest version
4. ANSI/BHMA A156.10-2017 Power Operated Pedestrian Doors
5. ANSI/BHMA A156.19-2019 Power Assist and Low Energy Power Operated Doors
6. ASME A17.1/CSA B44-2016 Safety Code for Elevators and Escalators
7. ICC/ANSI A117.1-2017 Accessible and Usable Buildings and Facilities
8. NFPA 72: National Fire Alarm and Signaling Code - 2019
9. ORS 447.200-280 - Oregon Standards and Specifications of Access by Persons with Disabilities
10. PSU Electronic and Information Technology (EIT) Accessibility Policy

1.3 DESIGN PROCESS AND REVIEW REQUIREMENTS

A. Considerations and Review in Project Design
1. The PSU CPC PM is charged with overseeing the implementation of PSU's Accessibility and Universal Design Standards.
2. On smaller projects that impact accessibility, the ADA/504 Coordinator and DRC Director (no outside consultant need be hired) shall be contacted by the CPC PM via email if any of the following conditions exist:
   a. Accessibility and Universal Design Standards cannot be strictly adhered to because of conditions beyond the control of the designer.
   b. An element of the project requires further interpretation of the Accessibility and Universal Design Standards or further discussion to determine the most appropriate solution.
   c. The designer believes an alternative solution may meet or exceed the functionality of the Accessibility and Universal Design Standards.
   d. An element of the project impacts accessibility and the Accessibility and Universal Design Standards do not address the issue.
   e. The Accessibility and Universal Design Standards cannot be met for another reason.

3. On larger projects, major renovations, new buildings, an outside consultant could be hired to review and comment on the design as it is developed by the design & consultant team per the section below.
4. The CPC PM and the design team shall work collaboratively with the ADA/504 Coordinator and DRC Director to determine an approach that incorporates universal design principles and ensures that the project is as accessible as possible.

B. Accessible Design Workshop
1. For all new construction and major renovation projects, design teams (including architect/engineer, consultants, and CPC's PM, assigned to the project, and project "owner") shall engage in an "Accessibility Design Session". This session shall be facilitated by the design team during the initial planning and design phase. The session shall seek to identify issues related to the specific project and to explore innovative approaches to accessibility. The following shall be discussed:
   a. Specific accessibility issues related to the projects.
   b. Opportunities for innovative solutions to provide a fully accessible facility.
   c. How accessibility issues could be addressed and how the innovative solutions discussed above can be integrated into the design.

C. Design review and recommendations by CPC PM, ADA/504 Coordinator and DRC Director
1. All new construction and renovation projects shall be presented to CPC PM, DRC Director, and ADA/504 Coordinator in the form of a "facilitated review or page turn" during:
   a. The final stages of Schematic Design
   b. Design Development
   c. Construction Document stage
2. The review shall be facilitated by the CPC PM (and design professional, at the discretion of the PSU PM) and shall include the following:
   a. Incorporation of the requirements of the Accessibility and Universal Design Standards.
   b. Compliance with the Oregon Structural Specialty Code, 2010 ADA Standards for Accessible Design, and other applicable codes related to accessibility.
   c. Incorporation of Universal Design principles.
   d. Incorporation of concepts and design solutions resulting from Design Workshop or page turn.

D. Review by Accessibility Consultant
1. A review by an Accessibility Consultant (hired by either the design team or PSU) shall be conducted on large new building construction and major renovation (over $10 million) projects. A consultant shall be contracted to provide the following services:
   a. Review drawings and specifications for accessibility and universal design at the design development phase.
   b. Review drawings and specifications at the 50% construction document phase for accessibility.
   c. After each of the two phases of review, the consultant shall provide PSU and the design team with a report related to elements depicted on the documents that appear to not be in line with the Accessibility and Universal Design Standards. The consultant shall provide suggestions on how to improve accessibility and meet to discuss their suggestions with the ADA/504 Coordinator and DRC Director.

PART 2 - PRODUCTS

2.1 BUILDING ELEMENTS

A. General Elements
1. When possible, provide a minimum clear circular turning space of 66" diameter or allow for approved T-shaped turning space. Overlap of knee and toe clearance is 10" max.
2. When a rectangular clear floor space is required, provide a minimum of 30"x52" if possible to accommodate large or motorized chairs.

B. Entrances
1. No building entrances shall have stairs (unless this is unavoidable).
2. The main entrance shall always be the accessible entrance and be located closest to other structures.
3. An accessible path of travel shall be provided from the main accessible entrance to adjacent buildings, parking and other uses located on the same site.
4. Where site conditions allow, controls at the entry doors shall include a powered door operator located on the right as you enter, located outside of the door swing. If badge readers or other security card readers are required, one reader shall be located adjacent to the powered door operator. A second

reader shall be located adjacent to the door handle on the latch side, with a building identifier sign in both raised high contrast text and braille.

C. Interior Routes
1. When possible, design accessible paths on a single level to avoid having to incorporate ramps and ensure they are 60” wide.
2. Stair climbers and vertical platform lifts shall not be used in new construction. In existing buildings, stair climbers or vertical platform lifts may be an option for making an area accessible, but shall always be a last resort.

D. Reach Ranges
1. Controls for items such as automatic door openers, infrared sensors, card readers, emergency call boxes, switches, or controls shall be installed between 18” and 46” AFF to the centerline of the outlet or object. [ADA note: 15”-48” AFF over counters up to 25” deep]
2. Controls and objects shall be installed at least 18” away from inside corners of walls or cabinets to allow for wheelchair access and shall not be blocked by furniture.
3. Items attached to walls (such as fire extinguishers, first aid kits, and defibrillators) shall be mounted so that the top reach is at 46” AFF [ADA note: 48” AFF]

E. Protruding Objects and Cane Detection
1. All circulation paths shall remain clear of barriers and hazards.
2. When possible in public spaces, no wall-hung items shall project more than 4” from a wall when between 27” AFF and 80” AFF. Projections over 4” in that height range require cane detection.
3. Curbs may be mistaken for a step or change in level, instead of cane detection for headroom obstruction. For this reason, barriers significantly higher than a curb or riser are recommended, such as a guardrail, fixed planter box, fixed bench, wall, or similar element.

F. Openings
1. When possible, design interior passageways without doors.
2. Avoid doors that swing out into corridors or accessible routes of travel except where required for emergency egress. In new construction, doors that are required to open out into corridors shall be designed within alcoves regardless of corridor width.
3. At door control devices, a clear floor space that is level and located outside of the swing of the door shall be provided.
4. The path of travel and traffic flow shall be considered when placing door control devices

G. Doors and Hardware
1. When possible, recess classroom and suite entry doors to allow for easier entry in and out of rooms.
2. All accessible exterior entry doors shall have an automatic sliding door or an automatic door opener, including gated entrances.
3. All classrooms and labs with accessible exterior entry doors shall have an automatic door opener.
4. All lactation stations shall have an automatic door opener.
5. Restrooms on the most highly trafficked floor of buildings shall have automatic door openers at a minimum of one women’s, men’s and “all-user” (all gender) multi stall restroom.
6. All main entry way vestibule entrances shall have automatic door openers on outer & inner sets of doors.
7. Auto door operators shall open a single door in a pair or both doors if needed. Doors may open separately if an opener is provided at both sides of the pair of doors. Card access shall be co-located with openers.
8. Auto openers: Consider tall / full height opener buttons on pedestals for added access options – including toe touch zone. This would be as an alternative to the standard square or rectangular buttons.
9. Door operator buttons shall have simple ADA wheel chair symbol. Confirm with PSU PM if additional text is desired as an option.
10. Where fire rated doors are required, doors shall have magnetic locks hold opens installed on interior doors.
11. In housing buildings, all doors with closers that access common rooms (e.g. laundry room, kitchen, trash room) shall have automatic door openers.

H. Hallways
1. Where large expanses of glass exist in the path of travel, decals or frosting shall be used to help distinguish the glass panes.

I. Steps, Stairs and Stairwells
1. Carpet shall not be used on stairs and in stairwells.
2. When possible, space shall not be designed with a single stair riser.

3. The leading edge of stair treads shall contrast with the rest of the treads. Provide a contrasting strip on the leading edge of the tread that extends a total of 2” back from the leading edge of each tread with a minimum 80% contrast. Integral, colored, cast-in-place stair nosing’s are preferred.
4. Slope treads of exterior stairs shall be 1.5% (1:66.7) maximum slope goal toward the leading edge of the treads. [Note: This is to ensure that, with construction tolerances, the resulting slope shall be less than 2% (1:48).]
5. At stairs that are not part of an egress route and are wider than 8’, intermediate handrail(s) that are evenly spaced shall be installed.
6. In consultation with PSU architects, consider providing tactile guide material on the floor at the top of stairs to give warning to users using the stairs headed down. It is recommended that the tactile material shall be the width of the stair in a depth of 18” in the direction of travel and located a stair tread depth from the stair nosing.

J. Ramps
1. Avoid creating curved ramps.
2. When a ramp is necessary, ramps shall have a slope goal between 5% (1:20) and 6.25% (1:16). Strive for the least amount of slope that is feasible. [ADA note: 8.33% 1:12 maximum].
3. The cross-slope goal of ramps and landings shall be 1.5% (1:67) maximum. [ADA note: up to 2% (1:48). This recommendation is to ensure that, with construction tolerances, the resulting slope shall be less than 2% (1:48).]

K. Handrails
1. Where possible, handrails shall be included on both sides of stairs.
2. Continuous handrails around the perimeter of intermediate landings shall be provided.
3. Handrails with centerline of handrail at 36” above stair nosings or above ramp surface shall be installed. Include handrail at 26” in locations used primarily or frequently by children. [ADA note: 34”-38” AFF]
4. Handrails shall be round in cross section.

L. Drinking Fountains and Hydration Stations
1. Where possible, drinking fountains with bottle fillers shall be installed in locations with alcoves. If fountains are not recessed in alcoves, cane detection shall be installed.
2. If drinking fountains in alcoves cannot be accommodated due to existing building conditions, hydration stations shall be installed and shall be the combination fountain and bottle filler type.

M. Service Counters and Reception Desks
1. All service counters and reception desks shall be installed at a height to accommodate wheelchair users at both sides of the counter/desks.

N. Life Safety
1. Code compliant areas of refuge shall be designed on every floor and shall include signage and a telephone. Requirements for Areas of Refuge are specifically called out in the building code, as well as when they are required. Confirm with PSU PM for inclusion into design when not specifically required by the building code.
2. Detectable warnings, for example fire alarm flashing lights, shall be installed per requirement of building code.
3. Portable Evacuation Chairs: Locate chairs in buildings at 2nd floor level or higher for use in assisted rescue of persons via stairs when elevators may not be available during an emergency. Product: Stryker Evacuation Chair. Include chair accessories such as headrest, wall bracket and cover for mounting in public corridor, readily available, non-locked space.
4. If Fire Code requires alarm strobes to be located such that two or more are visible from the same location, strobes shall be perfectly synchronized.

O. Lighting and Electrical
1. Unless space usage requirements dictate otherwise, 3500K LED lights shall be used in all interior building spaces. 5000K shall be used for all exterior lighting.
2. Lighting levels on ramps and stairs shall be at least equivalent to the lighting levels in adjacent areas.
3. Outlets shall be located at a consistent height of 18” AFF measured to the centerline of the outlet or object. [ADA note: outlets 15” AFF]

P. Elevators
1. Hall call buttons shall be brightly illuminated. The down button shall be centered at a height of 35" AFF and the up button not more than 43" AFF. Labels shall be installed adjacent to the up & down buttons and have raised, contrasting letters UP and DN as well as Braille below the text. Group buttons together (i.e. within 4”-6”)
2. Buttons shall be installed in the cab, with the highest buttons at 46” AFF. [ADA note: up to 48”]

3. A handrail at 32" AFF shall be provided on all walls of the elevator cabs that do not have controls or doors.
4. Auditory signals shall be installed in all elevator cabs to announce the floor numbers as the elevator arrives on each floor.
5. A floor number label with Braille should be included at each floor on the hall side jamb. Confirm availability with elevator manufacturer.

2.2 ACADEMIC SPACES

A. Classroom and Auditorium Features
1. Reference Appendix 1.4 - Classroom Standards

B. Furniture
1. Ergonomic, accessible furniture shall be placed in classrooms, instructional laboratories and computer laboratories as follows:
   a. Rooms with up to 25 seats: 1 for students and 1 for a faculty member
   b. Rooms with 26-75 seats: 2 for students and 1 for a faculty member
   c. Rooms with 76-150 seats: 3 for students and 1 for a faculty member
   d. Rooms with more than 151 seats: 4 for students and 1 for a faculty member
2. Specific furniture for the room types are as follows:
   a. Classrooms: Ergonomic chairs and pneumatic adjustable height desks that adjust from at least 27” Above Finished Floor (AFF) to at least 38”.
   b. Teaching laboratories: Accessible workstations
   c. Computer laboratories: Electric height adjustable table and one fully adjustable ergonomic chair without arms
3. A variety of desks, tables, and chairs (both with and without arms) shall be included in common spaces.
   a. Tables shall have four legs rather than pedestal bases. Wheelchair users require a depth of 19” and a width of 30” for accessible knee and toe space.
4. All ergonomic, accessible furniture placed by the Disability Resource Center shall have signage indicating that it is reserved for people with disabilities.

C. Technology
1. All technology shall be approved as accessible according to Electronic Information Technology Accessibility Policy

2.3 RESIDENTIAL SPACES

A. Housing Buildings
1. All doors with closers that access common rooms (e.g. laundry room, kitchen, trash room) shall have automatic door openers.
2. Accessible units shall be located on the first floor and dispersed throughout the floor so residents shall have a choice of location. If the building has an elevator, accessible rooms shall be dispersed throughout multiple floors.
3. A high and low peephole shall be provided on corridor doors to accessible units.
4. Window sills in accessible units shall be no higher than 42”.
5. Window covering controls in accessible units shall be extra-long and accessible (e.g. long blind wands or extra-long control strings)
6. Outlets in accessible units shall be located at a consistent height of 18” AFF measured to the centerline of the outlet or object. [ADA note: outlets 15” AFF]
7. Private bathrooms in accessible units shall have water durable surfaces on walls and floors.

2.4 RECREATION SPACES

A. Fitness and Weight Rooms
1. Accessible fitness equipment shall be provided that allows for the same range of exercises and strength training provided by the rest of the equipment.
2. Where feasible, equipment that can be used by all individuals shall be provided:
   a. Obtain at least one of each piece of equipment that has clearly distinguishable buttons for independent operation.
   b. Obtain at least one universal gym machine that accommodates wheelchair users.
   c. Obtain equipment that displays selections with light text on a dark background.
   d. Obtain equipment that displays selections with a large font option.

e. Obtain machines that contain braille and high contrast raised print labels for operation.
f. Flat panel displays with no distinguishable buttons or accessible means of operation shall be avoided.
g. Where possible, include equipment with menu selection systems with speech output and headphone jacks (for private operation)

3. Adequate path of travel to each type of accessible exercise equipment shall be provided.
4. Tether anchors shall be installed where service animals can rest securely while their person is using equipment. Tethers shall be stationed at multiple locations throughout the room.
5. Provide an accessible route (minimum of 36” clear width) along aisles and between machines
6. Provide an accessible clear floor space (30” by 48”) adjacent to at least one of each type of equipment. This may be positioned for either a side or forward approach and transfer. This clear floor space is best positioned outside of and adjacent to the accessible route.
7. High color and tactual contrasting material shall separate the primary walking paths from the work-out and equipment areas.

B. Pools
1. At least two accessible means of access shall be provided in to pools. At least one of these shall be either a pool lift or a sloped entry.

2.5 NON-COMMERCIAL KITCHENS AND KITCHENETTES

A. Where kitchen ranges or stove tops are installed, provide accessible height units with controls located near the front of the units. The exception is in childcare areas.

B. Where a microwave is provided, locate the unit such that the face is always flush to the front edge of the counter and the top of all controls are located at a height not exceeding 43” or below 18” AFF. Provide nearby, roll under surface area for food preparation.

C. 40” wide minimum clear aisles shall be provided.

2.6 EVENT/SPORTS ARENAS

A. Accessible and companion seating shall be available on multiple levels of the arena and shall be clearly marked.

B. Sensory bags shall be available for checkout during arena events.

C. Railings and partitions that may impact the line of sight of a guest in a wheelchair shall be either:
1. Installed a variety of heights around the arena, or
2. at a height tall enough not to impede any wheelchair users view.

2.7 COPY/SUPPLY WORK ROOMS

A. Provide vertically oriented storage/display with some of each item on at least two shelves (rather than putting all the pens on one shelf horizontally, put some of each kind on one shelf within the reach range (18” to 48” AFF) and one above or below.

B. Provide high color contrast raised tactile lettering and braille signs for commonly stored materials, such as office supplies.

2.8 CAMPUS GROUNDS

A. Construction Zones
1. Secure fencing or appropriate barriers shall be required around all construction zones. Warning tape is not accessible as the visually impaired may be unable to see the tape and is not sufficient as a safety barrier.
2. Ramps to sidewalks or buildings shall not be blocked by vehicles or equipment.
3. When building access or egress is being relocated or substantially modified, connections from the project site to accessible parking and accessible paths of travel shall be maintained.
4. When an accessible path of travel needs to be closed for construction purposes, an alternate accessible path and signage shall be created.

5. Construction impact notices include information on accessibility impacts and are posted on the Facilities & Property Management Impact Notices webpage.

B. Hardscapes
1. Exterior smooth or rough aggregate travel surfaces are prohibited. Finishes shall be medium broom finish or approved equal.
2. Whenever possible, locate items such as cleanouts, vault covers, grates, and similar items outside of the path of travel. When these items are located within the path of travel, they shall be flush with the surrounding walkway.

C. Path of Travel
1. Construct alternatives to ramps (such as sidewalks and proper grading) to achieve gentler slopes.
2. Where design slopes on walks approach 5% (1:20) due to existing conditions, consider the incorporation of a ramp or ramps to provide reduced slopes along the majority of the path. Ramps may be preferred over long stretches of walks at maximum allowable grade.
3. For landscaping swales adjacent to paths of travel, provide a raised edge that can be detected by white canes.
4. Bicycle parking shall not encroach upon paths of travel.
5. Pavers or stamped concrete shall not be used on accessible paths of travel. Pavers may be used in other areas, but shall have flush joints. Stamped concrete shall not have joints larger than 1/8" wide. Exceptions to be reviewed by the Project Manager.
6. Maximum cross slope goal shall be 1.5% (1:66.7). [ADA note: 1:48 or just over 2%. This recommendation is to ensure that, with construction tolerances, the resulting slope shall be less than 2% (1:48).]
7. All exterior routes to and from parking areas to building entries and between buildings shall be designed and graded in such a way that persons with mobility disabilities shall be able to negotiate such areas without special assistance. Grades shall meet the same standard as ramps with landing and resting areas strategically located along regular intervals along the route

2.9 RESTROOMS

A. Multi-Stall Restrooms
1. When possible, restroom entrances shall be designed without doors or vestibules (recommended) or have entry wall arrangements that adequately obscure sight lines into the restroom. Doors may be included with hold up features in order to remain open and out of the way during normal hours of operations of the facility.
2. Bariatric fixtures (including wall carriers) may be considered in ambulatory and accessible stalls – or in single user restrooms
   a. If Bariatric fixtures are supplied, all accessible grab bars/stall partitions/and supports shall be rated for the same use as the fixture.
   b. If Bariatric fixtures are not required, a high capacity hanger & toilet fixture may be used.
   c. Also consider floor mount, high capacity fixtures to handle heavier weights if needed.
3. A minimum of one in four stalls shall be ambulatory stalls.
4. A minimum of one sink and counter shall be installed at a lower height for wheelchair users and children.
5. This sink shall have an automatic faucet and/or ADA compliant metering faucet that can be activated by touch, mounted so that the water and trigger shall occur within 11" of the leading edge of the sink/counter.

B. Single User Restrooms
1. In locations where there are no accessible restrooms nearby, bariatric fixtures (including wall carriers) may be considered as the fixture within a single user restroom.
2. If bariatric fixtures or other high-capacity fixtures are supplied, all accessible grab bars, stall partitions and supports shall be rated for the same use as the fixture.
3. For high-capacity fixtures in single user restrooms, consider floor mounted, high weight capacity fixtures rather than wall mounted.
4. Single user restrooms should be designed as fully accessible restrooms and have all the features and signage indicating them as such.
5. Single user restrooms should consider using the "All-User" (ie all gender) restroom and be fully accessible as well.

C. Accessible Toilet Stalls
1. A sliding or rotating latch shall be installed at accessible stalls that can be easily operated with only a fist.
2. Pull handles shall be installed on both sides of accessible stall doors.

3. Occupied Indictors should be installed on all restroom doors that do not rest in an open position, especially at ADA stalls where doors typically rest in a close position and open outward.
4. As multistall restrooms utilize partitions that are more sight-line obscuring, with lower clearance above the floor and taller partitions, ensure that adequate ADA turning radii are maintained. (ie a 5'-6" radius may be required at ADA stalls when the partitions do not allow for the front of the wheelchair to swing under the partition.)

D. Toilet Accessories
1. In addition to ADA recommended 36" & 42" horizontal grab bars, a vertical 18" grab bars shall be included in ambulatory and accessible stalls (required by the City of Portland).
2. Toilet paper dispensers shall be installed on the nearest side wall, to current ADA standards. Install toilet paper dispensers below the grab bar so as not to interfere with access to vertical 18" grab bar. ADA stalls with grab bars shall provide high-capacity side-by-side, front feeding tissue dispensers rather than the jumbo dispenser – jumbo dispensers are difficult to mount and use in ADA stalls. Reference Toilet Accessories section for more information.
3. Toilet seat cover dispensers shall be mounted on the opposite wall or partition from side grab bar. The opening shall be a maximum height of 43".
4. Fixtures (including hand dryers, paper towel holders, sharps containers, and soap dispensers) shall be mounted with controls at a range of 43"-46" AFF. [ADA note: up to 48"]
5. Paper towel dispensers and hand dryers shall be mounted in locations that are not within an accessible path of travel and preferably within reach of one lavatory.
6. Where provided, baby changing tables shall be installed so that the front is at 34" above the floor. The horizontally-oriented tables are preferred to vertically-oriented units.
7. Coat hooks in accessible stalls shall be installed at a height of 36" AFF.

2.10 LACTATION ROOMS

A. Lactation Rooms
1. All lactation rooms shall have an accessible height sink and faucet combination deep enough to wash bottles and pump parts. Gooseneck or kitchen type faucets are recommended. Counter space adjacent to the sink should have a clear horizontal space at least the width of the sink to accommodate placement of items above.
2. All lactation rooms shall have a paper towel dispenser, a trash can, coat hooks at an accessible height, and a full-length mirror.
3. Outlets shall be located at a consistent height of 18" AFF measured to the centerline of the outlet or object. [ADA note: outlets 15" AFF] and close to the table and chair so that a pump can be plugged in on the table.
4. A minimum footprint of 7 feet x 7 feet (2100 X 2100) is recommended as it allows for a 5-foot (1500) radius circle with an accessible height surface that shall be at least 24" deep.
5. Walls shall ideally reach up to the structure or install sound attenuation in walls to minimize echoes and sound transmission (i.e. minimum STC 45) over them into adjacent spaces. Carpeting or other sound-dampening materials to minimize echoes is recommended.

2.11 LOCKER ROOMS AND SHOWERS

A. Locker Rooms
1. Accessible lockers shall be provided on accessible routes.
2. Lockers shall be located near accessible showers.
3. Accessible lockers shall be located within 18"- 43" reach range and be furnished with handles operable with one hand and shall not require tight grasping, pinching, or twisting of the wrist.
4. Full length mirrors shall be provided at least 74" AFF at their topmost edge and lower edge at 6" AFF maximum to allow for wall base if needed. Provide 48" clear floor space in front of full-length mirrors. Doors shall not swing into this clear floor space.
5. A separate area for individuals needing the assistance of a personal care attendant of the opposite gender shall be provided.
6. At least 1 bench shall be 24" wide and shall have a padded surface to facilitate laying down to change clothes.

B. Showers
1. Roll-in showers that are 36"x60" minimum shall be installed. [ADA note: 30"x60"]
2. Provide a clear floor space of 36"x60" minimum outside of transfer shower stalls and 36"x60 minimum at roll-in shower stalls. [ADA note" 36"x48" and 30"x60"]
3. A lift-track system from the mobility device into the shower shall be provided.

4. Shower controls shall be installed at 43” AFF and be operable with one hand and shall not require tight grasping, pinching, or twisting of the wrist, or made operable with a fist. [ADA note: 38”-48”]
5. Shower seats shall be installed at 18" AFF.
6. Grab bars shall be mounted at 34” AFF. [ADA note: 33”-36”].

2.12 SIGNAGE AND WAYFINDING

A. Signage
1. Service animal signage shall be installed at all exterior building doors.
2. ‘Elevator yield’ signage shall be installed at all elevator doors.
3. Priority stall signage shall be installed at accessible stalls in multi-stall restrooms.
4. Temporary braille signage shall be posted if it is to be in place for more than 7 days.
5. Display monitors shall be accessible both visually and audibly whenever possible.

B. Wayfinding
1. Touch monitors shall be installed at an accessible height with audible feature to serve as an accessible map on at least the first floor of the building (recommended).
2. Color coding shall be used to distinguish floors when possible. Color coding shall not be used as the sole method of wayfinding.

2.13 PARKING STANDARDS

A. Parking
1. Accessible parking shall be located in strategic locations in PSU parking facilities with accessible routes to enter/exit and parking pay-stations where needed.
2. Accessible parking spaces and associated parking meters shall be in close proximity to each other and on an accessible route.
3. PSU may exceed the minimum number of parking spaces required by law and shall monitor usage to determine the appropriate quantity of spaces to provide in excess of parking standards.
4. Pay-stations, coin slots and credit card swipe parking meters shall be located at an accessible height between 24”-43”.
5. Accessible electric vehicle charging stations shall have all controls at a height between 24”-43”. At least 1 vehicle charging station in a grouping shall be accessible.
6. Design of parking areas shall avoid using parallel or angled accessible parking.

B. Driveways
1. Driveways that cross sidewalks shall be designed such that the sidewalk at the top of the sloped driveway has a maximum cross slope designed to 1.5% (1:66.7) providing a continuous clear pedestrian access path.
2. An option for narrow curbside sidewalks, although less desirable, would be to provide sloped 7.14% (1:14) ramps along the sidewalk on either side of the driveway (so the sidewalk is closer to the street grade) and slope the driveway up beyond the sidewalk. The sidewalk portion shall have a maximum 1.5% (1:66.7) cross slope.

PART 3 - EXECUTION - Not included

END OF SECTION 011002

SECTION 01 10 03 – PERCENT FOR ART

PART 1 - GENERAL

1.1 SUMMARY REQUIREMENTS

A. Purpose

1. Oregon's Percent for Art legislation guides the acquisition of the state's public art collection. The program began in 1975 and requires that all state agencies, upon legislative approval of construction budgets, subject to certain specific exemptions, must devote no less than 1% of funds for the acquisition of public-facing artwork. The Percent for Art program is administered by the Oregon Arts Commission (OAC). The PSU CPC PM assigned to manage a large PSU capital project coordinates with the Arts Commission's Visual Arts/Public Art Coordinator and the PSU liaison to the Arts Commission on the process of forming a committee, selecting, acquiring, and installing artworks.

B. Art Selection Process

1. Artwork is selected and commissioned by a committee that typically includes the project architect, PSU CPC PM, art professionals, community members, and stakeholders from PSU including students, faculty, staff, and administrators. Artwork for the public art collection is acquired in different ways. Existing work can be purchased or a request for proposals can be generated through an open call or by invitation. The committee reviews proposals and selects artwork or artists after a thorough discussion and evaluation process.

1.2 REGULATORY REQUIREMENTS

A. All Design and Construction shall conform to the most recent adopted laws, codes, rules, ordinances, amendments, requirements, University authorities, and documents including but not restricted to the following:

1. OAR 123-475 1% for Art in Public Buildings, https://secure.sos.state.or.us/oard/viewSingleRule.action?ruleVrsnRsn=6900
2. Percent for Art at PSU, http://www.pdx.edu/pcre/percent-for-art-projects
3. Percent for Art program, http://www.oregonartscommission.org/programs/public-art/percent-for-art

PART 2 - PRODUCTS - Not Used

PART 3 - EXECUTION - Not Used

END OF SECTION 011003

SECTION 01 35 23 - SAFETY REQUIREMENTS

PART 1 - GENERAL

1.1 SUMMARY

A. Section includes safety administrative and procedural requirements for the Work.

PART 2 - PRODUCTS - Not Used

PART 3 - EXECUTION

3.1 SAFETY DURING CONSTRUCTION

A. Contractor to provide building safety for tenants and pedestrians to include complete fire, fume, dust, noise control, protection, overhead protection, traffic control and temporary signage as required during construction. For additional information, please refer to Environmental Health & Safety appendix.

3.2 STORM SYSTEM ACCIDENT DISCHARGE

A. If under any circumstances an accidental discharge to the storm system occurs EHS (503-969-8677) and the CPC PM shall be called.

3.3 EQUIPMENT ACCESS

A. Provide safe access to all equipment associated with operations and maintenance. Whenever feasible, access should not require maintenance personnel to use ladders, lifts, or fall protection equipment.

B. Provide sufficient working space around all equipment to allow safe operation and maintenance of the equipment.

C. Vertical clearance in mechanical/electrical rooms shall be 6'5". Minimum width of exit ways and access path shall not be less than 28 inches.

3.4 ROOFTOP SAFETY

A. Provide fixed stairs or a ships ladder where access to different roof elevations is required for maintenance and when carrying tools or equipment by hand is normally required.
   1. Where ships ladders provide access to a roof hatch, provide a top landing with enough space for a worker to set down tools and supplies while opening the hatch to the roof.

B. Fixed Access Ladder: Provide steel or aluminum access ladders fixed to wall with all required clearances to meet OSHA requirements. Ladder grip surfaces shall be 2-1/2” or less. (3” is too large for rung or side bar diameter.)
   1. Provide 24” wide cross over platform at parapets with side rails. Length as needed to fully pass over parapet, min. 30” run length of platform. Parapet or cap flashing should not be used as a step surface for access to the roof.
   2. Clearances: 7” offset for toe clearance from face of building to rung.

C. Steps need to be installed for access and egress onto / from rooftops at stairwells and from penthouses.

D. Where fall protection systems are needed, the design team shall employ an independent consultant to design the fall protection system to meet Oregon OSHA and ANSI standards.

E. Roof Guardrails: When possible or feasible, install roof edge guardrails up to 42” above surface of roof. 42” height should be maintained along tapered edges. Guards may be designed and installed with ballasted weights

on top of roof. Guards may be attached to face of parapet wall when possible but should be mounted at a height where 42” is the min height above highest point of sloping / tapered roofing installations.

1. Guardrails are preferred over horizontal life lines since lifelines rely on the use and training for use of the proper equipment in order to work on the roof. Perimeter guardrails allow for use, cleaning and maintaining of the roof by maintenance staff without the requirement of additional training and specialized equipment or harnesses.

F. Roofing Walking Pads:

1. Provide and install compatible roof walking pads over roofing and as a dedicated pathway to any building elements or equipment needing regular service. Pads shall be installed in a direction that does not create a tripping hazard when roofing flexes or pads bow up with temperature changes. See also: Roofing section.
2. Walking pads shall be installed as a part of the roofing contract or by an approved roofing installer / manufacturer in order to maintain the warranty of the roof.

G. Exit Routes:

1. Exit routes must have adequate lighting per local and federal codes. Provide exterior lights at all roof access/egress points.
2. Each exit must be clearly visible and must have a distinctive sign reading “Exit.” Install additional directional signs to exits where necessary. The line-of-sight to an exit sign must be clear. There must be enough reliable light on or from exit signs to allow them to be effective during emergencies.

END OF SECTION 013523

SECTION 01 58 00 - TEMPORARY SIGNAGE

PART 1 - GENERAL

1.1 SUMMARY

A. Description
1. Temporary signs, if posted for less than seven days (<7 days), related to construction may be exempt from PSU Signage and Wayfinding Standards, as approved by PSU Project Manager.
2. Temporary signs that will be in place fewer than seven days (<7 days) should meet ADA visual requirements whenever possible.
3. Temporary signs that will be in place longer than seven days (>7 days) shall conform to all applicable ADA guidelines and City of Portland codes, including tactile requirements.
4. Temporary signs shall be promptly removed when no longer required.
5. Repurposed, recycled, recyclable, and other sustainable materials are highly encouraged for temporary signage.
6. Follow standard PSU signage products and installation requirements as specified in Division 10.

B. Location
1. All campus property.

C. Related Sections
1. Division 10 - Signage
2. Appendix 10.1 - PSU Signage & Wayfinding Standards

PART 2 - PRODUCTS - Not Used

PART 3 - EXECUTION - Not Used

END OF SECTION 015800

SECTION 01 74 00 - CLEANING AND WASTE MANAGEMENT

PART 1 - GENERAL

1.1 SUMMARY

A. Portland State University aims to provide its facilities users with a clean, safe, and healthy environment.

B. All decisions regarding waste, recycling, and compost containers, placement, and/or design of storage areas for indoor or outdoor waste receptacles require approval by and input from the Waste Management Coordinator in the Campus Sustainability Office.

C. Recycle construction materials per City of Portland standards and in accordance with a LEED certified waste management plan for major remodel and construction projects.
1. Complete and submit the Pre-construction recycling plan/applications as required by the City of Portland.
2. All landfill and recycling weight tickets and/or hauler invoices should be copied and routed to PSU CPC PM and Waste Management Coordinator to verify waste management methods and include totals in PSU's diversion rate.

D. Minimize waste as much as possible by using the four preferred strategies to waste reduction, in this order: source reduction, reuse, recycling, and waste-to-energy.

E. Ensure inclusion of approved indoor infrastructure, waste storage dock, or containment bay for all waste management activities.
1. Spaces shall prioritize proper ventilation and odor control strategies.
2. Selection, placement, and sizing of compactors and waste containers will be determined by the Waste Management Coordinator. Additionally, input from operational and service provider stakeholder groups (e.g. custodial services and waste haulers) will be sought during the design process. Coordinate with PSU CPC PM and Waste Management Coordinator.

F. For Projects that generate light ballasts and lamps containing polychlorinated biphenyl and mercury; or other hazardous waste contact EHS.

1.2 RELATED SECTION

A. Sections, appendices, and other PSU documents referenced in this section include:
1. PSU General Conditions
2. Div 10 - Restroom fixtures, stalls, specialties and special preferences
3. Appendix - All Gender Restroom Plan

1.3 DESIGN STRATEGIES

A. Consider design strategies that minimize building cleaning and maintenance.
1. When possible and on a case-by-case basis, consider segregating office areas from classroom areas.
   a. Ideally, from a cleaning and security standpoint, offices should be designated to upper floors and classroom to lower floors. This allows custodial services to securely clean offices during off hours and restrict general public access.
2. Avoid open grid ceilings where mechanical ducts, pipes and structural members can collect dust.
3. If designing multi-story curtain walls
   a. Design a means for periodic structure and window maintenance and cleaning.
   b. Avoid high curtain walls where dust can collect on top of horizontal mullions and access for cleaning is restricted, or else coordinate and assure that the facility has budgeted for specialized cleaning services.
   c. Provide means for safe access for maintenance, such as installation of permanent fall protection system and/or ability to access from a lift.
4. Doorless entries to restrooms are standard if possible. This type of access is less prone to vandalism and other criminal activity. If restroom is located near quiet areas, discuss this strategy with PSU CPC PM and building committee.
5. In restrooms, design hand wash area to avoid accumulation of water on floor and sink counter.
6. See all gender restrooms appendix requirements.

7. Avoid locating bulletin boards behind trash and recycling containers. Residues from trash and recycling materials may stain bulletin boards.
8. Provide custodial closets according to design guidelines in Custodial and Storage Closets drawings. Also reference Section 22 10 00 for plumbing requirements.
    a. Provide electrical outlets.
    b. Provide constant mechanical negative pressure ventilation,
    c. Chemical dispensers shall have backflow prevention.
    d. Custodial areas where chemicals are mixed shall have an eyewash unit installed at the sink.

PART 2 - PRODUCTS

2.1 MATERIALS, PRODUCTS AND SURFACES SELECTION SUMMARY

A. Minimize cleaning by selecting materials, products, and surface finishes that are easy to maintain. In addition, vandalism is a concern at PSU. Select materials, products, and surface finishes that are resistant to damage

B. Minimize finishes (e.g. ceramic tile) that require joints in areas where sanitation is a high concern (e.g. restrooms). Joints (e.g. grout) can stain and grow bacteria. Continuous surfaces are preferred.

C. Select surfaces that do not stain, especially in wet areas. Avoid dark colors on surface finishes. Prefer neutral colors, see Section 09 Finishes.

D. Prefer flooring products that are seamless and stain resistant. Prefer dark colors.

E. PSU uses Green Seal certified or comparably certified surface cleaners with no solvents. When selecting materials, products and surface finishes, consider ones that are easily cleanable with these types of cleaners.

PART 3 - EXECUTION

CUSTODIAL AND STORAGE CLOSET SHOP DRAWINGS

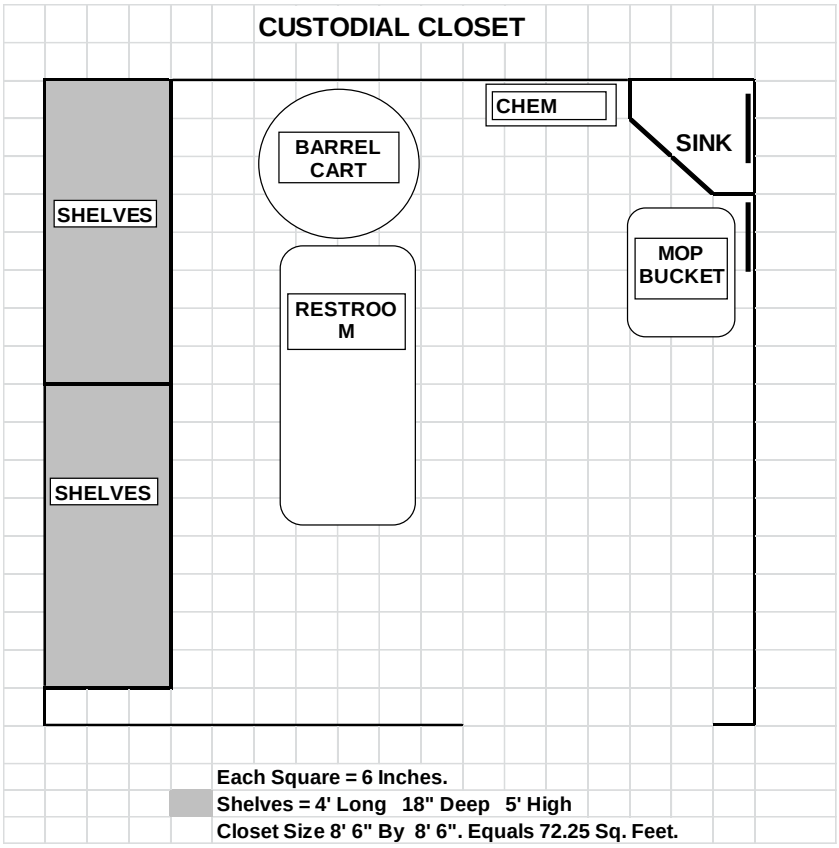
CUSTODIAL CLOSET
CHEM
SINK
BARREL CART
SHELVES
MOP BUCKET
RESTROOM
SHELVES
Each Square = 6 Inches.
Shelves = 4' Long 18" Deep 5' High
Closet Size 8' 6" By 8' 6". Equals 72.25 Sq. Feet.

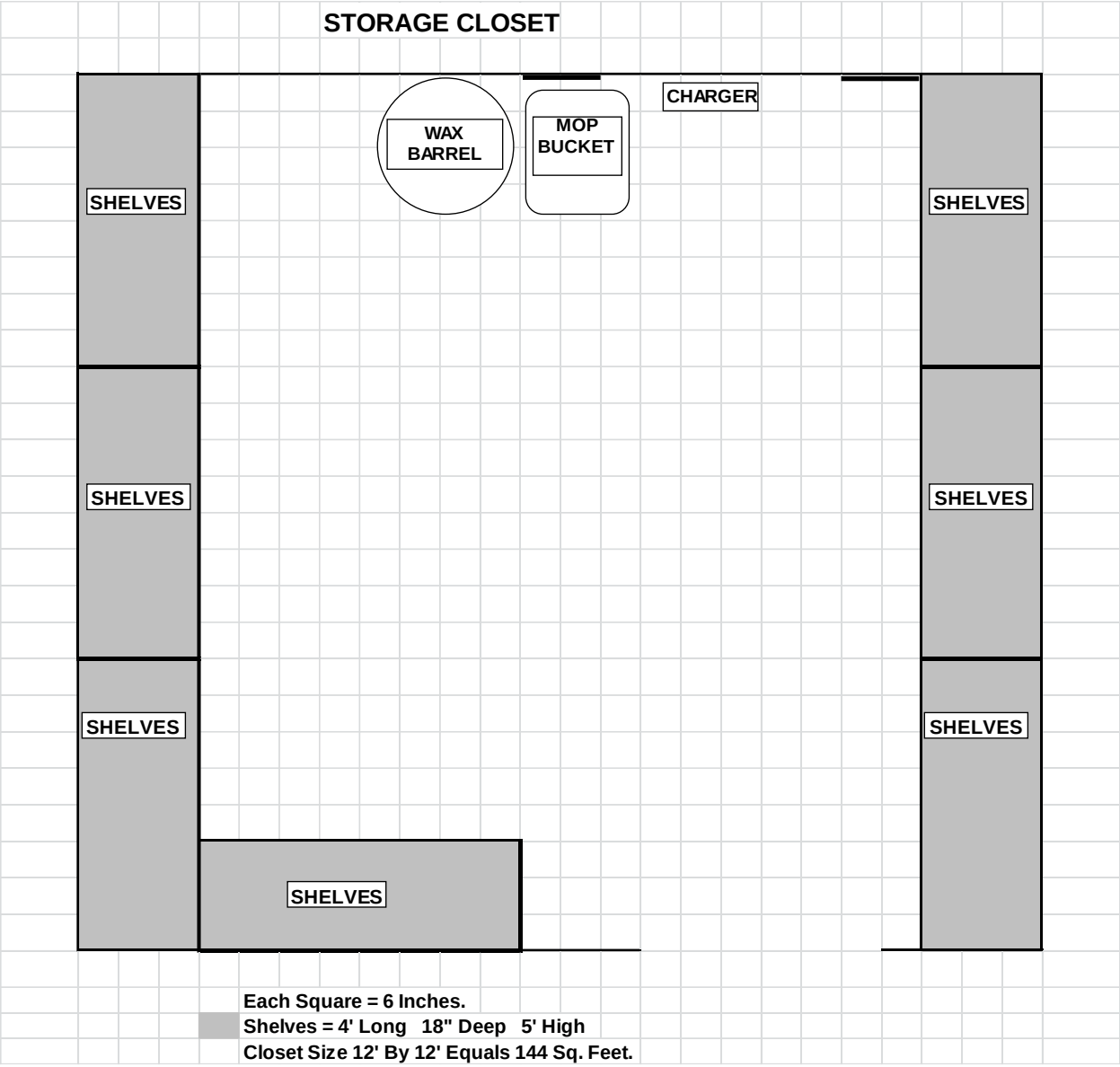

END OF SECTION 017400

SECTION 01 81 13 - SUSTAINABLE DESIGN REQUIREMENTS

PART 1 - GENERAL

1.1 SUMMARY

A. Portland State University (PSU) aims to provide all of its facilities users with a clean, safe, and healthy environment.

1.2 RELATED SECTIONS & APPENDICES

A. Sections, appendices, and other PSU documentation referenced in this section include:
1. Div 22 - Plumbing for bottle refill stations and drinking fountain fixtures
2. Div 23 - HVAC for metering and sub-metering
3. Div 26 - Electrical metering, sub-metering, and energy efficient lighting fixtures & lamps
4. Div 32 - Exterior Improvement for information related to green spaces
5. Div 32 - Tree Care Plan
6. Appendix 01.4 - PSU's Climate Action Plan

1.3 REFERENCES

A. External references, codes, and standards in this section include:
1. Carpet and Rug Institute, Green Label program, https://carpet-rug.org/testing/green-label-plus/
2. City of Portland Parks and Recreations Urban Forestry, "Tree Species and Planting Lists," https://www.portlandoregon.gov/trees/60043
3. Energy Star, https://www.energystar.gov/
4. Forest Stewardship Council, https://fsc.org/en
5. Living Building Institute, "Red List of Chemical and Materials," https://living-future.org/declare/declare-about/red-list/
6. Oregon Department of Energy, Energy Code, https://www.oregon.gov/bcd/codes-stand/Pages/energy-efficiency.aspx
7. UL, Greenguard Certification Program, https://www.ul.com/resources/ul-greenguard-certification-program
8. United States Environmental Protection Agency, WaterSense program, https://www.epa.gov/watersense
9. United State Green Building Council, LEED rating system, https://www.usgbc.org/leed

1.4 STANDARDS OF PERFORMANCE

A. PSU is committed to economic, social, and environmental sustainability. That commitment is acknowledged through our preference for sustainable products including those that are made from rapidly renewable resources, durable, non-toxic, manufactured and sourced locally, harvested sustainably, contain a high percentage of post-consumer recycled content, are comprised of recyclable components, and verified as a sustainable option through industry guidelines or third party organizations such as: Carpet and Rug Institute's Green Label program, Forest Stewardship Council (FSC), Energy Star, or Green Guard.

B. PSU requires all major new construction and renovation projects to achieve LEED Gold minimum certification through U.S. Green Building Council under the most current version of LEED. All other new construction and renovation work shall incorporate LEED and other sustainable design philosophies to the greatest extent possible.

C. In accordance with PSU's *Climate Action Plan*, materials with low "embodied emissions", the emissions associated with the extraction, production, transport and use of a given product, are strongly encouraged. Where possible, PSU seeks Environmental Product Declarations and Health Product Declarations for materials which outline life cycle and Health related impacts as well as sustainable attributes.

D. For new construction or major remodels PSU strives to meet the following Site Energy Use Index (EUI) goals:

Building Type	Recommended Standard EUI For New Buildings
Office and Services	25kBtu/ ft2
Office and Laboratories	75kBtu/ ft2
Office and Classrooms	30kBtu/ ft2
Office and Recreation	35kBtu/ ft2
Residence Hall	35kBtu/ ft2

PSU buildings were Categorized into 5 categories as follows:

Office/ Service	Residence Hall	Office and Class-rooms	Office and Labora-tory	Office and Recrea-tion
CPS	OND	SEC	SRTC	ASRC
HSB	BLU	UCB	FAB	PSC
USB	STHL	PKM	EB	
UH	MONT	AB	RGH	
EH	BDWY	HOFF	SB1/VSC	
RMNC	SEH	LH	RLSB	
SBH	BLKS	URBN	COR	
SMSU	UP	KMC		
HGCDC		FMH		
NASCC		CH		
		SH		
		ML		
		VB		

PART 2 - PRODUCTS

2.1 SUSTAINABLE DESIGN / MATERIAL HANDLING

A. No urea-formaldehyde resins or adhesives permitted.

B. To every extent possible, materials and adhesives to avoid the “Red List of Chemicals and Materials” as designated by the International Living Building Institute.

C. Locally and regionally sourced finishes and materials within 500 miles are encouraged.

D. Use materials from salvaged sources, where feasible and appropriate.

E. In cases of renovation, consider salvage and reuse of existing hardware and structures wherever possible. Work with community partners to salvage architectural materials that are usable but not able to be reused on site.

F. Consider maintaining-in-place existing products in lieu of replacing with new if in good condition.

G. To every extent possible, products with EPD’S should be selected. All new projects pursuing LEED certification should pursue MR credits Option 1 –Material Ingredient Reporting and Option 2 – Material Ingredient Optimization points.

2.2 SUSTAINABLE PRODUCTS

A. Lighting
1. Daylighting shall be the primary lighting strategy with electric lighting supplementing, as needed. Design for daylighting harvesting in as much of the building footprint as possible.
2. All new light fixtures/ lamps to be energy efficient, LED fixtures, and contain low levels of mercury.
3. Lighting installations must meet or exceed Oregon Energy Code.

B. Equipment, Fixtures & Appliances
1. All fixtures and appliances should be as water efficient as possible, be WaterSense certified where applicable, and should assist in achieving Water Efficiency credits in the LEED rating system
2. Include at least one bottle refill station on each floor in new construction and major renovations and in conjunction with other remodels where feasible. Bottle refill stations may include combo bottle refill

station and drinking fountain, retrofitted kits for water fountains, or other solutions that allow users to easily refill water bottles.

3. All electronics and appliances shall be Energy Star rated and EPEAT certified as applicable.

C. Equipment, Fixtures & Appliances - Hand dryers

1. Choose high-speed energy efficient hand dryers over paper towel dispensers in all restroom facilities.
2. Choose paper towel dispenser over hand dryer in a single stall restroom.
3. Hand dryers shall not be recessed and shall be installed with splash plate.

D. Flooring & Finishes

1. All materials and finishes should contain the highest percentage of recycled content wherever possible, including concrete, carpet, tiles, flooring, paint, etc.
2. Carpet tiles are to be used wherever carpet is necessary or requested.
3. Use finishes such as flooring or millwork materials from rapidly renewable sources whenever possible.
4. Use certified wood, wood finishes, or wood products that are considered to have environmental qualities that meet or exceed those of FSC certification whenever possible.
5. Select paints, coatings, sealant, adhesives, composite wood, carpet, and agrifiber products that have low or zero VOC content.
6. Use a natural linoleum over vinyl composite tile or other sustainable flooring options (recycled rubber flooring, etc.) whenever possible.

E. Landscaping

1. Preserve and/or integrate green space and tree canopy wherever possible.
    a. Refer to:
        1) City of Portland Parks and Recreations Urban Forestry Division’s list of recommended species
        2) Campus Tree Care Plan
2. Choose drought tolerant and regionally appropriate landscaping that is suited for existing climate and future climate changes. Choose landscaping that is biologically diverse and provides habitat for natural pollinators.
3. Where applicable, the use of permeable pavers is encouraged.
4. In new construction, the incorporation of visible, usable, accessible to occupants, and maintainable green roofs must be pursued and implemented when operationally and financially feasible.
    a. In major renovations, this design strategy should also be considered.
    b. Green roofs shall meet ecosystem services such as habitat promotion, filtration capabilities, and run off mitigation.
    c. Green roofs shall be designed to have limited irrigation requirements.
    d. It is preferred that all green roofs are provided with a handrail.
    e. Green roofs should have walkways that are elevated 3-4” and should be maintainable and cleanable below the walkways.

F. Metering

1. Incorporate metering and sub-metering standards set by PSU.
2. All retail space utilities shall be metered.
    a. In retail spaces a cost analysis shall be performed to compare the provision of standalone systems (Electrical, Mechanical, Plumbing) which are directly metered by the utility versus tying into existing building systems that are sub-metered by the building automation system
    b. Approval from CPC and FPM is required before tying into existing building systems.
    c. Natural gas and electrical utilities shall be metered by the utility company.
    d. Water, chilled water, and heating water utilities shall have flow meters installed for each retail space and cumulative flow rates shall digitally report to the University's DDC control system.
    e. All Retail tenant space to have their own utility services or sub meters tied to PSU’s Building Automation System for monitoring.

G. Windows

1. When renovating existing buildings and replacing windows, explore opportunities to add bird friendly glazing with a frit or film. Where windows are not being replaced, the addition of a film should be considered. In all cases, if the pattern is visible to the human eye it should support the architectural expression of the building.

H. Electrical Receptacles

1. Per LEED requirements, a certain percentage of electrical receptacles need to be controlled via occupancy sensor to shut off a specified amount of time after a space becomes unoccupied. Reference current LEED requirements for percentages and specified times by room type.
    a. Ensure that occupancy sensor controlled electrical receptacles are not used for A/V equipment.

PART 3 - EXECUTION

3.1 SUSTAINABLE EXECUTION REQUIREMENTS

A. Coordinate all work including discovery, demolition, removal, or storage of hazardous or environmentally sensitive materials with PSU EHS and CPC PM.

B. Develop and implement a tree protection plan during construction phase.

C. Implement storm water controls during the construction phase and include storm water management infrastructure in design of campus spaces.

END OF SECTION 018113

SECTION 01 83 00 - FACILITY SHELL PERFORMANCE REQUIREMENTS

PART 1 - GENERAL

1.1 SUMMARY

A. Portland State University has a wide variety of buildings of differing architectural styles, age, and material construction. Because of this PSU does not have a single material specified for exterior treatment.

B. RELATED SECTIONS
1. Sections, appendices, and other PSU documents related to this section include:
   a. Div 22 - Plumbing - Showers
   b. Div 32 - Bicycle site storage

PART 2 - PRODUCTS

2.1 MATERIAL SELECTION

A. When selecting materials for the exterior of all new projects the design team must consider the following when selecting these materials:
1. Materials must be durable and must be able to withstand weather and pollution with minimal maintenance. Cleaning of the surfaces once every decade with power washing is the norm. Acceptable materials include brick, concrete, and some metals.
2. Materials must be aesthetically compatible with adjacent buildings.
3. Metal elements such as trim, exposed structural elements, door, and window frames must be designed so as not to need refinishing for at least 50 years. Such metals may include aluminum, copper, and galvanized metals.
4. Materials requiring significant and constant upkeep must be avoided and are to be approved by the PSU CPC PM prior to specifying. These include items such as wood, painted metals, EIFS, and plastics.

5. Locally sourced materials will be given preference over materials manufactured at locations distant from the PSU campus.

6. Materials with low embodied emissions are preferred. Where possible, PSU seeks Environmental Product Declarations for materials.
7. PSU encourages the use of the following materials when within 10 vertical feet of a sidewalk: glazing, stainless steel, concrete and brick or other forms of masonry.

PART 3 - EXECUTION

3.1 DESIGN CRITERIA

A. When designing the exterior of all new projects the design team must consider the following:

B. All designs must make use of good architectural practices for shedding water and protecting against weather. Flashings and other design features must be the primary source of weather protection. Sealants, while important elements in good design, must not be used as the primary source of weather and water protection.

C. Roofing and Fall Protection
1. All roofs shall be designed to provide parapet or guardrail for safety.
2. If a parapet is provided, then the top of the parapet shall be a minimum of 42” (45” is preferred) above finish surface of roof at all points.
3. If a guardrail is provided then it should be sufficiently in-board from the edge of the roof so as not to be visible from the ground. The guardrail shall be designed as required by code.
4. Where feasible, the roof guardrail or parapet height shall meet Oregon OSHA requirements so maintenance workers can perform their work without fall protection.
5. Provide fall protection systems where roof guardrails or parapets are below required heights.
6. Fall protection should be considered when re-roofing will decrease parapet height to <42".

D. For all new buildings and major renovations, secured interior bike storage areas shall be required. Providing secure storage within one block of project may be considered - verify and coordinate with PSU campus' shared bike shelters plan.

E. In new buildings that include secured interior storage area, shower facilities shall also be considered.

END OF SECTION 018300

SECTION 02 00 00 - EXISTING CONDITIONS, REMEDIATIONS, AND DEMOLITION

PART 1 - GENERAL

1.1 SUMMARY

A. For further information on Assessments and Remediations contact PSU Environmental Health & Safety (EHS) at 503.725.3738

1.2 RELATED SECTIONS

1. None

1.3 REFERENCES

A. "Notice of Intent to Construct" from Oregon Department of Environmental Quality

PART 2 - PRODUCTS – Not Used

PART 3 - EXECUTION

3.1 SURVEYS

A. Site Surveys

1. Engage a professional Land Surveyor licensed in the State of Oregon to provide a current or updated Land Survey of building site for projects involving new building construction outside of the footprint of existing buildings. Existing / historic PSU survey records are not always available or may have discrepancies.
2. Match all new work to existing survey maps to provide topographic continuity.
3. Provide established property line locations and label length & coordinates. Show recorded easements, setbacks. Show existing building locations. Show utilities, site features, sidewalks, drive ways, curb cuts, planting areas.
4. Represent all ground surface by means of 1-foot contours and spot elevations. Show spot elevations at all tie-in locations, building corners, monuments, survey markers on or near site and adjacent sidewalks.
5. Note all ground floor elevations of existing buildings and slab structures on the drawings to the nearest hundredth of a foot.
6. Verify and show all storm sewer and sanitary sewer inlet and outlet invert elevations at manholes by field measurement as well as grated elevations. Show underground storm, water, and sanitary pipes.
7. Identify all buildings shown wholly or partially on the finished drawings by name and accented by shading or crosshatching. In tabular form show all major building corner coordinates.
8. Field-locate, record the location, and identify on map, all surface improvements, and natural conditions.
9. Field-locate all trees 1” in diameter or greater at an elevation of 4.5’ above grade and major vegetation and record location on the map. Identify tree size and type on the map. (Protect existing shrubs, trees, and lawn areas during the progress of fieldwork; under no circumstances will their removal be permitted.)
10. Locate all tunnels and manholes, and show floor elevation of tunnels and tunnel coordinates.
11. Include a general vicinity map, small scale, on the finished drawings. The University will furnish appropriate background.
12. Provide to the University an electronic copy of each file in AutoCAD, PDF, and one physical copy of the drawing. Provide typed labels completely identifying the contents of each disc submitted.
13. Prior to construction all sanitary and storm laterals surrounding the project area shall be inspected via camera. Coordinate who will be conducting inspection with PSU CPC PM.

3.2 ASSESSMENTS

A. Air Assessment

1. Installation of equipment that produces air emissions, such as paint spray booths and bag filters, may require a "Notice of Intent to Construct" from Oregon Department of Environmental Quality.
2. Take precautions to prevent visible dust emissions; water trucks and street sweepers, for example, may be required.
3. Prevent odor emissions that could result in complaints and compromise indoor air quality. When odor is unavoidable, communicate in advance the cause and timeline to those potentially affected and coordinate with PSU's EHS and CPC's PM.

B. Asbestos and Lead Assessments
1. All state and federal requirements to be followed as well as any PSU specific requirements. Refer to provisions in the Environmental Health and Safety Specifications and Documents appendix.
2. Signage to be placed on building material that is known to have asbestos-containing material but was not abated as a part of the project.

C. Contaminated Soils Discovery
1. Many locations on University property have the potential for soil and/or ground water contamination. Sources of contamination include industrial activities such as fuel storage or dispensing or hazardous material spills prior to University acquisition of the property. It is not uncommon to find soil and groundwater contamination where fuel stations, fuel storage tanks, heating oil tanks, emergency generator tanks, industrial activities and landfills are located. EHS will assist with the compliance of Federal and State requirements.
2. Contact EHS immediately if environmental contamination is discovered or disturbed.
3. Develop a Work Plan during the design phase to address site contamination issues, environmental assessments, and historical information about the site.
4. Hire an environmental consultant familiar with site assessment and cleanup issues. Pre-characterize soils and water for cost estimates; collect enough samples to adequately define the extent of the contamination. Address costs to sample, analyze, manage, and dispose of contaminated soil, groundwater, and storm water in the contract documents. Additional costs may include worker protection and environmental consulting.

D. Mold Assessment
1. Upon discovery or question of possible mold material, notify the PSU CPC PM and EHS immediately. Areas of the suspect material shall be posted, isolated, and avoided. Safety and containment procedures shall be initiated.
2. EHS will initiate preliminary observation and testing as required to determine nature of the material.
3. In coordination with the PSU CPC PM, EHS will contact an approved and certified testing lab to observe, test, and provide a prompt analysis report of sample materials from site, if applicable.
4. Results of Lab report with analysis and recommendations will be reviewed by PSU. EHS will provide recommendations to the PSU CPC PM, including safety precautions for all project personnel, visitors, and surrounding public.
5. A separate consultant and report may be required to determine the cause of the mold for purposes of incorporating into final restoration

3.3 REMEDIATION

A. Removal and Disposal of Contaminated Soils
1. Disposal of Contaminated Soil
   a. All excavated materials must be contained or stockpiled on plastic sheeting and covered with plastic sheeting. Representative samples must be taken for waste designation and disposal at PSU authorized disposal sites. Analytical test results must be transmitted to EHS for waste determinations prior to disposal. If any of the wastes designate as hazardous waste, EHS will manage the containment, transport, and disposal of that waste through PSU's hazardous waste contract. Petroleum-contaminated soils are not Hazardous Waste but must be disposed at solid waste handling facilities. Solid Waste Handling Facilities classify and manage petroleum-contaminated soils by the concentration of gas, diesel, or heavy oil-hydrocarbons present in the waste. Petroleum contaminated soils above certain hydrocarbon concentrations must be thermally-treated.
   b. Contain water that has been in contact with contaminated soils in Baker tanks. Contact EHS for assistance with the proper treatment and disposal of potentially contaminated water. EHS will assist with obtaining sanitary sewer discharge permits if appropriate.
2. Cleanup Requirements
   a. EHS will assist PSU CPC PM in determining the extent of cleanup requirements, based on pre- and post-assessment data. Cleanup requirements vary from site to site and depend on the extent and location of the contamination. In some cases, removal and offsite disposal of contaminated soils is necessary, while in other cases, the installation of groundwater treatment

systems may be required. In some instances, there is no choice but to leave environmental contamination behind. When environmental contamination remains at a site, the University implements institutional controls to protect human health and the environment.

3. Institutional Controls
   a. Contact EHS for guidance on protecting institutional controls that may already be in place at a known contaminated site. Institutional controls limit or prohibit activities that may result in human exposure to contamination. They may include protective asphalt or a concrete cap over a contaminated site, a restrictive deed or covenant on the property, a vapor barrier, a vapor collection system, groundwater monitoring wells, or a groundwater treatment system.
4. List Contaminated Sites
   a. Provide a list that addresses type of contamination and location

B. Mold Remediation & Restoration
1. Upon instructions to provide remediation by EHS, the PSU CPC PM shall notify the Contractor appropriately with regards to possible changes to the Contract due to mold remediation requirements.
2. The PSU CPC PM may elect to retain a remediation contractor outside the project Contract or retain the project Contractor to provide services including remediation specifications, demolition work, remediation work, build-back restoration work, and coordination with existing and on-going project contract work and timeline.
3. Required safety and containment precautions shall be initiated, including personal protective equipment.
4. Contractor shall isolate remediation area from remainder of project and remove mold material.
5. Air handling, drying, and monitoring shall be scheduled and contained.
6. Areas of remediation shall be cleaned and treated with EHS approved materials and methods.
7. The Testing Lab shall review the remediation areas in a timely manner and provide analysis to determine schedule of build-back restoration. Recommendations shall be given to PSU and EHS and issued to the PSU CPC PM to safely start the Contractor's build back restoration of the remediated areas.
8. Build- back restoration of remediation area shall include correction of cause of mold.

C. Water Remediation
1. Construction projects sometimes generate wastewater, which must be disposed of properly and in consultation with EHS, BES Disposal Permit may be required. Two common activities that generate wastewater are Masonry Cleaning and Potable Water Flushing.
2. Concrete & Masonry Cleaning
   a. Only wastewater from water-only washing of surfaces that do not contaminate the wash water may be discharged to storm drains. Concrete slurry shall not be discharged to the storm drain. Contact EHS for more information before planning to discharge to a storm drain.
   b. Do not allow wastewater, concrete slurry, or rinse water to soak into the landscaping unless prior arrangements have been made with PSU's Facilities and Property Management (FPM) staff. Some landscaped areas are under a strict watering schedule to minimize plant diseases.
   c. When using cleaning products or washing contaminated surfaces, waste water must be collected for discharge to sanitary sewer. At the job site, berms must be set up to prevent wash water from reaching storm drains. Sweep the area to minimize the rinsing of dirt and other solids into the storm sewer.
   d. Wastewater may have to be collected and treated to meet the pH limit of 5.5-12. Agricultural lime has limited effectiveness as a neutralizer. Test the pH of the waste water after treatment and adjust treatment or disposal methods accordingly.
   e. Lead, asbestos, and other hazardous materials cause the wash water to violate sewer discharge limits. If hazardous materials could be in the wash water, samples must be collected and analyzed for the concentrations of those materials. If the water violates local sewer discharge limits, it must be disposed of as hazardous waste.
   f. Avoid the use of strong cleaners and solvents, which can cause the waste water to be hazardous waste even after use and dilution with rinse water.
3. Potable Water Flushing
   a. Potable water may be discharged to the storm drainage system. However, because potable water contains residual chlorine, select a storm drain at least 100 feet away from the point of use to allow chlorine to dissipate into the air before the water enters the storm drain.

3.4 DEMOLITION

A. Where feasible, coordinate and practice "deconstruction" instead of demolition. Deconstruction refers to the dismantling a building where reuse, recycling, and salvage are maximized instead of clearing a site by the most expedient means.

B. Remove existing walls, doors, frames, finishes, electrical, mechanical, and other building items as required to accommodate new construction.

C. Remove all abandoned mechanical, electrical, and plumbing lines.

D. Verify and protect all existing structure. Protect existing lobby areas, restrooms, and elevators. Protect gardens and soils

E. Generally, the abandonment of existing equipment and material in place is not acceptable. Abandoned systems become a liability since it becomes difficult to determine what is active and what is not. The correction of existing underground utility problems and removal of abandoned underground utility features, while maintaining the operation of the building, should all be addressed in the contract documents. Immediate disposal of removed materials shall be required.


F. Salvaged materials – well in advance of project launch, work with CPC PM and Waste Management Coordinator to walk premises and identify items which may be reusable by PSU or community partners. Management Coordinator. Arrange to have them moved to a location to be identified by PSU CPC PM.


G. At the beginning of any remodeling work, cover all return air grilles with filtering material to prevent accumulation of dust in existing duct system.

H. PSU Post-Demolition Certification shall be completed at conclusion of all demolition work.

I. Coordinate all work including discovery, demolition, or removal of hazardous materials (including asbestos lead and silica) with PSU EHS and CPC PM.

END OF SECTION 200000

SECTION 03 00 00 - CONCRETE

PART 1 - GENERAL

1.1 SUMMARY

A. Overview

1. The use of Supplementary Cementing Materials (SCMs) should be specified whenever possible because of their potential to reduce global warming. SCMs should be discussed early in design to address structural performance and schedule considerations.
    a. Supplementary cementing materials (SCMs) contribute to the properties of hardened concrete through hydraulic or pozzolanic activity. Typical examples are fly ashes, slag cement (ground, granulated blast-furnace slag), and silica fume. These can be used individually with Portland or blended cement or in different combinations. Supplementary cementing materials are often added to concrete to make concrete mixtures more economical, reduce permeability, increase strength, or influence other concrete properties.
2. Specify concrete products that utilize the following whenever possible:
    a. Low VOC materials
    b. Fly ash materials
    c. Recycled aggregate materials

B. Related Sections

1. Division 01 Section “General Requirements”
2. Division 01 Section “Sustainable Design Requirements”
3. Division 05 Section “Metals”

1.2 REFERENCES

A. Standards Referenced in this Section Include

1. ASTM C150 Standard Specification for Portland Cement
2. ACI CODE-318 Building Code Requirements for Structural Concrete
3. International Environmental Product Description System

1.3 SUBMITTALS

A. Documentation

1. When concrete elements are designed by a structural engineer, a copy of the structural calculations shall be submitted to PSU for archiving.
2. Asbuilt drawings, submittals and photographs shall be submitted for review & archiving showing locations of embedded post-tension cables, hidden utilities, mechanical, electrical, and plumbing conduit, and other components concealed from view in finished construction.
3. As-built documents will accurately reflect the location of footings and all subsurface concrete.
4. Environmental Product Declarations (EPD’s) shall be submitted for concrete mix designs when quantity placed on one project exceeds 5 cubic yards.

1.4 QUALITY ASSURANCE

A. Structural engineering

1. All installations of structural concrete shall be designed and reviewed by a structural engineer registered in the State of Oregon.

PART 2 - PRODUCTS

2.1 MATERIALS

A. Exterior Concrete
1. Unless otherwise specified, minimum 28-day compressive strength of exterior concrete shall be min. 4000.psi for sidewalks and other exterior flatwork, curbs, planter walls. (Note: City of Portland standard for sidewalks is 3300.psi with a 4" slump.)

B. Sealers
1. All sealers and coatings for exposed exterior & interior concrete slabs or low walls shall be low-VOC, LEED / Green Building appropriate products, and be compatible with anticipated future coatings. See below for Coatings.
2. Exposed structural concrete shall be coated & protected with a clear sealer to protect rebar from water infiltration and subsequent rusting, expanding, and eventual spaulling of concrete.
3. Rebar should have adequate concrete coverage to reduce the reliance on sealers along to protect concrete columns and walls exposed to weather.

C. Concrete Paint
1. Paint on concrete surfaces, especially exterior, should be applied with high durability coatings that allow concrete to breath while protecting it from water intrusion.
   a. Products: Tnemec Protective Coatings. Or approved equal.
   b. Paint coatings that require Anti-Graffiti properties, ie below 10' height, may require Tex Cote (described below) that is a tint-able material, within the Tnemec company.

D. Sealers & Anti-Graffiti Coatings
1. Provide anti-graffiti coating on all exterior concrete in vulnerable areas up to 8'-10'.
   1. Anti Graffiti coating recommended as follows:
      1. Product: "World's Best Graffiti Coating" graffiti protection for coating over masonry, timber and natural building surfaces. Mfr: Urban Restoration Group, US Inc. Graffiti is removed with hot water and high pressure, then recoated with product.
         1. Provide cleaning product data information when product is installed – cleaning with hot water, power washing, etc.
      2. Product: Paint coating, clear or tintable using "Tex-Cote" "Graffiti Gard IV" low luster clear or pigmented, water based coating. Graffiti paint will 'crawl back' on itself and can be cleaned with Biodegradable Cleaner followed by pressure washing. Recoating possible with abrasion of existing surface and reapplying new Graffiti Gard IV coat.
      3. Product: For Concrete & Masonry bricks, the Prosoco Blok-Guard & Graffiti Control WB 15 or similar products may be used to seal the surface when a clear, penetrating sealer is required.
      4. Product: Protectosil, "Chem-Trete BSM 400" provides a low-VOC Silane product for water repellency on concrete & masonry. Clear coating product with no residue. For use on vertical concrete & masonry buildings.

E. Colored Concrete
1. Color pigmented concrete slabs & walkways should be limited and must be approved by PM in design prior to specifying due to difficulty in color matching and repair in the future.
2. Accurate submittals and as-built information are required to record manufacturer and color mix formulas for future repair and color match.

F. Skate Deterrents
1. At low edges of exposed concrete along buildings, planters, and other landscaping features, provide integral skate deterrents.

PART 3 - EXECUTION

A. Concrete housekeeping pads at mechanical & electrical equipment shall be reinforced & anchored to underlying slab.

B. Concrete Sidewalks
1. Provide compacted base of ¾" minus gravel materials.
2. Reinforce with weather durable reinforcing bar or galvanized welded wire fabric mesh.

3. Form with regular control joints, expansion joints, or saw cuts.

C. Install concrete sealers at exposed concrete slabs in public or dust-sensitive areas and where staining from spills would be undesirable. Polished and sealed concrete is a preferred finish on campus where possible and appropriate.

D. All efforts should be made to avoid cutting concealed rebar, post-tension tendons, and utilities in existing slabs. Utilize ground penetrating radar (GPR) prior to drilling, fastening, or cutting into existing slabs.

E. When drilling at a concrete, consider adding an additional hole or conduit of a similar size as a spare. Install fire-stopping or a temporary seal as required for wall rating.

END OF SECTION 030000

SECTION 04 00 00 - MASONRY

PART 1 - GENERAL

1.1 DESIGN AND PERFORMANCE REQUIREMENTS

A. Non-bearing masonry walls shall be detailed & installed for vertical deflection of materials. Provide positive connection back to structural walls at regular spacing.

B. Masonry installations shall allow for seismic inter-story drift.

C. Extend vertical reinforcing up to top of parapet walls. Provide horizontal reinforcing at the top of the wall.

D. Provide vertical and horizontal reinforcing in CMU walls.

E. Provide control joints in CMU walls and expansion and contraction joints in brick walls where masonry abuts other surface materials. Joints shall be sealed to prevent penetration of water or moisture into the interior of the wall cavity.

F. Provide weep holes at all exterior walls or masonry cladding near the wall base and at horizontal lintels, structural supports. Space every 3'-0" o.c. Vents shall be UV stable and insect resistant corrugated plastic or stainless steel.

G. All masonry shall be above grade.

H. Masonry bricks & CMU shall be obtained from a single source and/or manufacturer in order to ensure a uniform texture and color, or uniform blend of materials.

I. Use of stack bond is discouraged. If used for architectural reasons, provide vertical reinforcing bar in each stack of block, and horizontal reinforcement throughout.

J. Provide stainless steel thru-flashing at wall caps, window heads, ledger angles, base bearing, etc.

K. Use of brick as structural material is discouraged. Use only as cladding or other non-structural applications.

L. Lintels and horizontal support: Use heavy gauge structural steel, hot dipped galvanized and coated for long life and resistance to rust and deterioration from salts, etc.

1.2 QUALITY ASSURANCE

A. Structural Engineering
   1. All installation of concrete masonry units (CMU) and brick masonry walls shall be designed and reviewed by a structural engineer.
   2. Sub-base slabs for brick pavers and exterior hardscape shall be designed and reviewed by a structural engineer. Engineer & design layout of expansion joints for sub-base slabs to allow for thermal expansion.
   3. Fabricators & installers providing shop drawings for vertical walls of brick or CMU shall provide drawings designed and stamped by a structural engineer.
   4. A structural engineer is required to design all the structural anchors used in masonry attachments.

1.3 SUBMITTALS

A. Masonry / Bricks
   1. Require submittals for all bricks, mortars, sealants, coatings, expansion joint sealants / materials.
   2. Provide efflorescence tests with brick submittals for approval.

1.4 WARRANTIES

A. Masonry / Bricks
   1. Contractor shall be responsible for removal of all efflorescence that appears on surfaces within 3 years of project completion.

PART 2 - PRODUCTS

A. Masonry / Bricks
   1. Submit samples of surface finish textures and color for approval.
   2. In remodel and addition projects, field verify masonry and mortar colors to match existing materials as closely as possible

B. Masonry / CMU
   1. Submit samples for color & finish face texture verification when applicable and where designed to be exposed to exterior view.

C. Grout and mortar
   1. Submit color samples for approval.
   2. In remodels and additions, field verify colors to match existing.
   3. The use of calcium chloride as a cure accelerator is not recommended in grout or mortar.

D. Reinforcing Steel
   1. Consider specifying reinforcing steel with a high recycled content where available. Structural Engineer to review and approve prior to use.

E. Sealers
   1. Provide sealers for bricks & grout to be installed after finished materials are in place.

F. Weather Repellent Admixtures
   1. Provide appropriate admixtures for CMU or Brick mortar installations on all finished exterior masonry. Submit product data sheets for review by Architect or Engineer of record prior to use on site.

G. Anti-graffiti coating
   1. Provide anti-graffiti coating on all exterior masonry in vulnerable areas up to 8’-10'.
      a. Anti Graffiti coating recommended as follows:
         1) Product: “World’s Best Graffiti Coating” graffiti protection for coating over masonry, timber and natural building surfaces. Mfr: Urban Restoration Group, US Inc. Graffiti is removed with hot water and high pressure, then recoated with product.
         2) Product: Paint coating, clear or tintable using “Tex-Cote” “Graffiti Gard IV” low luster clear or pigmented, water based coating. Graffiti paint will ‘crawl back’ on itself and can be cleaned with Biodegradable Cleaner followed by pressure washing. Recoating possible with abrasion of existing surface and reapplying new Graffiti Gard IV coat.

PART 3 - EXECUTION

3.1 INSTALLATION

A. Prior to installation on major construction projects, Contractor to provide a 48” x 48” vertical mock-up with selected bricks to demonstrate design, layout, and color mix patterns.

B. Select and arrange units for exposed unit masonry to produce a uniform blend of colors and textures. Mix units from several pallets or cubes as they are placed.

END OF SECTION 040000

SECTION 05 00 00 - METALS - STRUCTURAL AND ARCHITECTURAL

PART 1 - GENERAL

1.1 SUMMARY

A. Engage a structural engineer for the design of all structural steel members, handrails, guardrails, and related fasteners, anchor bolts used for attachment and installation.

B. All structural steel and ornamental metal exposed to exterior weathering shall be weather durable materials. I.e. hot dipped galvanized steel, factory coated steel, anodized aluminum, or stainless steel.

C. Consider specifying structural steel and other metals with high recycled content.

1.2 SUBMITTALS

A. The engineer's calculations should be submitted for PSU records along with all stamped drawings and sketches for each project.

B. Contractors & fabricators should provide stamped shop drawings by a licensed structural engineer for all structural steel items not included in a design set. Record copies of all drawings and calculations should be submitted for PSU records.

PART 2 - PRODUCTS

2.1 ARCHITECTURAL METALS

A. Exterior metal plates and gratings
   1. Metals installed along walking paths shall be coated with non-slip texture or configured or manufactured to resist slipping.

B. Stairs
   1. Metal stairs shall have fully closed risers for safety even when not explicitly required by code.
   2. Nosings: Stairs of all materials in public areas shall have a visually evident nosing or other non-slip metal or traction type insert.
   3. Railings: Provide Schedule 40 min. pipe hand & guard rails unless otherwise required for additional structural loads. (1-1/4" dia. with 0.14" wall thickness; 1-1/2" dia. with 0.145" wall thickness).

C. Metal edges
   1. All metal edges of siding, corner guard, wainscot, or other exposed metals shall be hemmed or have smooth rounded, non-sharp, non-burred edges

PART 3 - EXECUTION

3.1 INSTALLATION

A. All metals delivered to site shall have a minimum of a factory primer and be wrapped to protect the materials from weather and site damage until installation. Paint, finish or otherwise protect materials as soon as installed to prevent excessive weathering during construction.

B. Welding specified to be done onsite shall be done with a proper welding screening.

END OF SECTION 050000

SECTION 05 70 30 - DECORATIVE METAL DETERRENTS

PART 1 - GENERAL

1.1 SUMMARY

1. Signage alone has not proven to be an adequate deterrent to skate & skateboarding activities therefore metal deterrents are to be installed in areas vulnerable to damage.
2. Related Sections
   a. Div. 33 Paving Specialties

1.2 DESIGN AND PERFORMANCE REQUIREMENTS

A. Provide stainless steel or aluminum deterrents for reduce wear & damage to outdoor benches, metal rails, and concrete or brick edges in the landscape, public walkways or plaza areas around campus.

B. Products to consider: Architectural styled units are preferred or products integral to brick grout joints that protrude above the top surface and beyond the front face or edges.

PART 2 - PRODUCTS

2.1 SKATE, SKATEBOARDING, & BMX DETERRENTS

A. Example Manufacturers:
1. Barrett Robinson (www.barrettrobinson.com) or Intellicept "Skate Stoppers" (www.skatestoppers.com). Cut or grout joint inserts, or surface mount including architectural or artistic series.
2. Grind to a Halt (www.grindtoahalt.com) Threaded "Grind Minders". Also, round or flat edge "Handrail Minders" to attach to metal rails.

PART 3 - EXECUTION

3.1 DETERRENT INSTALLATION

A. At handrails in areas subject to skate activities, provide top of rail mounted deterrents at 1/3 or mid-points of the rails. Handrails that stand alone away from a wall and set at the required 36" height are vulnerable to skate activities.

B. At concrete or brick edges within 36" of grade plane, with a long lead-in area, provide deterrents along the edges ~3'-0" O.C.

C. Material to be non-staining bronze, stainless steel, or cast / shaped aluminum that can be placed to overlap or interrupt the wall edge.

D. Utilize edge mounting for use in minimizing edge scraping. Utilize top mounted units for use in minimizing skating along the top surface if it provides a wider, smooth surface. Top surface alone is not adequate if edges are appealing and within 36" of grade.

E. Utilize bench edge bumps to minimize edge damage at wood or masonry benches.

END OF SECTION 057030

SECTION 06 00 00 - ROUGH CARPENTRY

PART 1 - GENERAL

1.1 SUMMARY

1. Prefer Institutional quality to meet American Woodworkers Institute specifications and standards for AWI custom grade or better, all plywood construction. Encourage use of certified wood, wood finishes, or wood products that are considered to have environmental qualities that meet or exceed those of FSC certification whenever possible.
2. Interior wood: Wood used on interiors - such as plywood or solid wood blocking - shall be **fire retardant treated** as required by code.

PART 2 - PRODUCTS

2.1 MATERIALS

1. Fire Retardant Treated Wood: Where required by code for building Type, interior framing lumber, plywood and other wood products shall be pressure-impregnated with fire retardant chemicals. Wood shall bear UL FR-S label and meet IBC Class I flame spread index.

2.2 ROUGH CARPENTRY

1. Specify fire-retardant treated lumber and plywood where used as a part of framing or blocking in non-combustible construction. Or specify metal blocking, sheet stud blocking, or sheet metal panel blocking.
2. Utilize 20-gauge min. steel stud framing on non-engineered, non-structural partitions.
3. Increase gauge when framing around doors, at door jambs, or when specified by Structural Engineer to have 18-gauge or thicker materials.

2.3 FINISH CARPENTRY

1. Specify low-VOC finishes on exposed wood materials such as trim, wall panels, wall base trim, and shelving.
2. Utilize FSC-certified finish wood materials when available.

PART 3 - EXECUTION

3.1 ARCHITECTURAL WOOD CASEWORK

1. Specific institutional quality casework to meet AWI specifications & standards for custom grade or better.
2. Cabinet boxes and frames should be constructed of all plywood construction.
3. Specify FSC certified wood and wood products when possible.
4. Specify low-VOC adhesives in any plywood or other wood composite materials in casework and countertop base materials, and for adhesives.
5. Specify low-VOC finishes when possible for casework, wood door paints and clear coatings.
6. Countertops: Specify solid surface countertops for added durability over standard laminate countertops, especially at wet areas, sink and kitchen countertops. Quartz countertop materials may also be considered if cost is feasible. Confirm with PSU-PM. Solid surface and quartz materials allow for greater durability, and the use of both top mount and undermount sink installations.
7. Plastic laminate countertops & horizontal surfaces are discouraged due to commercial wear and durability issues. Laminate subsurface materials such as high-density particle board are more susceptible to water damage and deterioration of countertop surfaces. Laminate edging is less durable and susceptible to damage and breakage. Wood edging on laminate counters are prone to water damage in wet areas and are less desirable as well.

3.2 ROUGH CARPENTRY

1. Specify fire-retardant treated lumber and plywood where used as a part of framing or blocking in non-combustible construction.

3.3 FINISH CARPENTRY

1. Specify low-VOC finishes on exposed wood materials such as trim, wall panels, wall base trim, shelving.
2. Utilize FSC-certified finish wood materials when available.
3. Vertical plastic laminate installations may be used at casework and wall panel installations.

END OF SECTION 060000

SECTION 07 00 00 - THERMAL AND MOISTURE PROTECTION

PART 1 - GENERAL

1.1 SUMMARY

1. Adhere to standards and details of latest editions of National Roofing Contractors Association (NRCA) handbook for roofing, the Sheet Metal & Air Conditioning Contractors Association (SMACNA) manual for metal flashing, and Oregon OSHA standards for worker safety.

1.2 SYSTEM DESCRIPTION

A. Roofing Design & Performance Requirements

1. Provide a minimum ¼" per foot slope to drain.
2. Integrate overflow scuppers or overflow drains in new or renovated roof projects per code where not previously provided.
3. When designing a roof consider that PSU staff, faculty and students may be allowed access to the roof for the performance of maintenance and/or experiments. Work closely with PSU staff to design the roof to accommodate anticipated traffic areas and anticipate the installation of molded walkway pads that work with the roofing materials.
4. The preferred roofing color is white. Black and grey are secondary color preferences and shall be explored when a white roof is not feasible.
5. LEED requirements and corresponding SRI values shall apply to new roofing systems or major roof replacements.
6. For roofs with flat substructure, provide tapered insulation to slope to drains. Minimum ¼" per 1'-0" slope.
7. Roof hatches shall be lockable and not accessible from public areas. Ship ladders that lead to roof hatches shall have a landing where possible.
8. Roof top architectural and structural screen walls shall be built and sealed to not allow water to get into the structure and ultimately into the roofing system.
9. Solar study shall be performed to see if its energy impacts make it economically feasible to install. In consultation with CPC, PSO, and FPM in some cases solar panels may be installed regardless of its energy impacts.
10. For projects that require Green roofs they shall be manageable in size and maintenance requirements. For projects that do not require green roof's consult with CPC, PSO and FPM on their feasibility.
11. Roof top architectural and structural screen walls shall be built and sealed to not allow water to get into the structure and ultimately into the roofing system.

B. Fall Protection Requirements

1. All Skylights, light wells and roof access hatches shall meet the OSHA requirements for fall protection, including guardrails, gates, and related materials
2. Roof anchors or other means of fall protection shall be installed to allow full coverage of roof for maintenance, including vegetated roof installations.
3. Include fall protection systems for maintenance on roofs & rooftop systems when guardrails or high parapets are not present or are below required heights. All fall protection devices to be engineered by Oregon licensed structural engineer and must meet all code and OSHA requirements. Fall restrain or arrest capacity on systems shall meet a minimum 5000.lb resistive force.
4. PSU requires that the roof perimeter of all new construction projects have railings or parapets that are 42-45" high at their lowest point. Additional height on guards will allow for future roof material overlays. Roof guardrail or parapet height shall meet OSHA requirements so maintenance workers can perform their work without fall protection.
5. Fixed fall protection systems (beyond guardrails at perimeter) shall be engineered to meet structural requirements. Pre-engineered products shall be attached as required by the structural engineer. Anchor height: Min. 24" high units, to allow for termination of roofing materials to surface of anchor shaft. Height is above roof deck, and deck attachment point. Height allows for roof taper to rise and fall around fixed height of roof anchors.
6. For metal safety swing gates that are installed around roof hatches they must have a robust locking mechanism that locks into an adjacent guardrail system.
    a. Safety swing gate shall have durable spring closer.
    b. Preference for a locking mechanism that does not latch at roof entry points. All product submittals shall be reviewed by PSU's EH&S department.

C. Traffic Coatings

1. Traffic coatings shall be installed as a weather coating and concrete protection system against chemical and water infiltration.
2. Proposed floor coating systems for parking garages should be selected to meet the highest demands as outdoor, multi-story and underground garage areas that are subjected to many different stresses, including atmospheric conditions, de-icing salt effects, automotive fluids as well as vehicular and pedestrian traffic load

1.3 SUBMITTALS

A. Prior to construction, the contractor is to provide shop drawings, submittal data and complete Material Safety Data Sheets (MSDS) for all roofing components.

B. Contractor is required to provide submittal information for all roofing products and components.

1.4 WARRANTY

A. For roofing, the Contractor shall provide an Installer's Warranty of at least 5 years (PSU PM to confirm time frames available for installer's warranty during construction. Seek to have longest installer warranty that is available within project budget confines) and a Manufacturer's Warranty of 20 years. On a project-by-project basis, CPC Director, FPM Director and Assistant Director of Operations and Maintenance, and Associate Vice President for Planning, Construction, and Real Estate will meet to determine any additional extended warranty requirements for roofing duration.

PART 2 - PRODUCTS

2.1 MATERIALS

A. Roofing
1. Low Slope Roofs: PSU has limited resources to maintain its roofs. Select roofing materials that are durable, has built-in redundancy, and requires minimal maintenance. Roofing membrane types will be considered on a project-by-project basis. Materials in use on campus that can be considered for use on new or re-roofs include:
   a. 5-ply built-up SBS modified bituminous roofing is in use, but new applications should be minimized.
      1) SBS may be used, but hot mop tar products or petroleum products with heavy odors for roof or waterproofing are strongly discouraged. These products should only be used when no other product can be used or when liquid coatings need to be used that are only compatible with SBS materials & systems.
   b. Single-ply EPDM roofing: 65-90 mil thicknesses
   c. Single-ply PVC welded membrane roofing
   d. Single-ply TPO Roofing: Consult with Project Manager for specific thickness requirements.
2. Sloping Roofs: Where occurring on a few residential style buildings, provide built up tab shingles, architectural grade.
3. Walk Pads: Walk pads shall be installed with products matching base roof materials and be fully adhered (per Mfr. recommendations) to minimize movement or debris from collecting under walk pads. Install along reasonable path to serviceable equipment and around roof for maintenance access.

B. Traffic Coatings
1. Traffic Coating product shall be discussed with PSU Project Manager prior to construction to ensure system meets current design intent.
2. Use of paint-on coatings over existing EPDM or SBS roofing should be minimized.

C. Roof Anchors
1. Provide galvanized metal, pre-engineered, pre manufactured steel products that meet the engineer/code requirements for roof top safety tie off use. Engineer to establish spacing based on design loads of standard roof anchor post products.
2. Size to be standard 24" height, for a 24" height above deck attachment. Height allows for roofing envelope to rise and fall with tapered insulation.

D. Green Roofs: When required, green roof systems shall include robust design with durable root barrier to protect roof membrane buried beneath planted areas.
   1. Future maintenance of green roofs should be considered when designing extent of roofs on buildings. Areas of green roofs should be kept to a minimum unless they can be maintained.

E. Solar Panels on Roofs: An elevated solar panel support system that allows for work and cleaning below should be considered vs. a ballasted system set directly on the roof membrane. Spacing of panels should also allow for future cleaning of panels to maintain efficient operation. Adding a walking path between rows, at intervals that allow for cleaning, as well as maintenance, shall be required.

PART 3 - EXECUTION

3.1 INSTALLATION

A. Roofing
   1. All roofing and repair work to be done by a Manufacturer-approved roofing contractor.
   2. All existing material and labor warranties must be maintained when doing repair or modifications to existing roofing installations still under warranty.

B. Traffic Coatings
   1. Applicator must be certified to install coating system selected.
   2. Coatings shall be selected for top decks and exposed areas of parking garages as well as exposed drive ramps and entrance areas. Coatings shall be appropriate to heavy vehicle traffic and slip resistant for pedestrian traffic.
   3. Coatings shall be selected for elevated walking surfaces, skybridges & surface ramps exposed to weather, water, and de-icing procedures. Walking surface coatings shall be appropriate to foot traffic and be slip resistant.

END OF SECTION 070000

SECTION 08 10 00 - DOORS AND FRAMES

PART 1 - GENERAL

1.1 SUMMARY

A. RELATED SECTIONS
1. 07 00 00 Thermal and Moisture Protection
2. 10 14 00 Signage
3. Appendix - PSU Office Standards
4. Appendix - PSU Classroom Standards

1.2 SYSTEM DESCRIPTION

A. Doors
1. Provide blocking / reinforcing for door closers and cylinder or mortised locksets, and panic hardware locations
2. Fire rated doors shall have appropriate labeling when delivered to the job site. Rating labels shall remain visible and should not be covered or painted over.
3. Wood door surfaces should be clear sealed or painted with durable protective coatings, especially at areas within the touch zone of rooms or corridors. A durable clear factory finish is preferred over field finishes on wood doors.

B. Frames
1. Frame mounting to be appropriate to framing materials in wall.
2. Frame mullions for double doors shall be keyed removable, locked in place and installed in conjunction with surface mounted Von Duprin 98 Series panic exit hardware. Coordinate application with PSU lockshop & CPSO. Removeable mullions shall have a secure storage location that allows for it to be locked in place with dedicated mounting brackets (i.e. in an adjacent storage or janitor room.)

C. Lites and Relites
1. All rooms with windows, including offices, located along the perimeter of a building shall have doors with lites, relites, and other treatments that allow the penetration of natural light into inner spaces (e.g. corridors and inner rooms).
2. The design of door lites and relites, top or side lites should be designed to allow for the transmission of daylight deeper into interior spaces. Enclosed rooms, especially offices, on a building perimeter should have door lites and side lites to allow for daylight to pass through or into adjacent spaces. The use of glass walls is encouraged to allow for natural light to be shared by more employees in a space.
3. Door lite and relite coverings (e.g. blinds) shall be specified according to PSU Office Standards and PSU Classroom Standards appendices.

D. "Not an exit" signs should be installed where people may mistake a door for an exit. (This may be most important at doors leading to equipment rooms or similar).

E. Walls and floors that are within the closure path for fire curtains or fire doors shall be left clear of furniture and any other obstructions. Labels or signage may be required to clearly identify the path of the door to remind users of the need to keep that specific area clear.

F. Doors and hatches for roof access should not be located next to the roof edge. Roof hatches should be lockable from inside and should not be accessible from public areas.

G. Windows and Glazing
1. Excessively large panes of glass should be avoided. Large glass panes such as Viracon glazing is hard to replace and has limited production runs, long replacement lead times.

H. Consider security films at pedestrian level glazing that is prone to vandalism or other damage, even though glazing may be tempered glass.

PART 2 - PRODUCTS

2.1 DOORS

A. Metal doors shall be a minimum of 1 ¾" thick, heavy-duty, insulated, pre-primed, 16-gauge metal. Use 14-gauge when in high impact or higher security situations. Exterior metal doors shall be galvanized metal materials.

B. Wood doors shall be a minimum 1 ¾" thick solid core with wood veneer to match adjacent doors in the area of the building or as specified and approved by PM.

C. Aluminum doors at interior or exterior shall be high quality, thermally broken at exterior. Thickness may be 1-3/4" to 2-1/4" for added durability.

2.2 FRAMES

A. All door frames shall be a minimum 16-gauge, pre-primed, welded steel frames. All corners to be mitered, welded and ground smooth. 14-gauge shall be used when located in high use or high impact or exterior application. Frames shall be primed and painted at interior applications; galvanized for all exterior applications.

B. Hollow metal steel or aluminum door pairs with no center mullion: Hardware for exterior doors and pairs of exterior doors shall utilized concealed rod or concealed cable latching to top frame and bottom threshold.

C. Exterior door frames shall be galvanized with approved durable exterior finish.

D. Interior door frames, at wet lab or sound proofing applications, shall be reinforced with a basecoat plaster such as Structo-lite for additional strength and durability.

E. Fire rated frames shall have appropriate labeling when delivered to the job site. Rating labels shall remain visible and should not be covered or painted over.

F. Knock down door frames are not allowed for use in new construction or major renovations. Any installation of a knock down frame must be approved by PSU PM.

G. Exterior door glazing: provide clear protective coating on glass used in exterior doors and doors into more secure areas. Clear films used on Campus in the past that area acceptable are as follows:

H. Products: Solar Guard (Saint-Gobain company) "Armorcoat Safety & Security Window Film" 4 or 6-mil thickness or approved equal.
   1. Consider thicker 8-mil film for higher security areas, such as products labeled "military grade".
   2. Products: 3M Safety and Security Window Film safety series, or similar products selected specifically for use / need of application.
   3. May be considered for Security or Solar heat resistance.

2.3 LITES AND RELITES

A. All relite frames shall be 16-gauge, pre-primed, welded steel frames. All corners to be mitered, welded and ground smooth.

B. Door lites and relites shall have a minimum ¼" thick tempered glass or other glazing as specified for doors with fire ratings.

C. Door lite and reliote coverings (e.g. blinds) shall be specified according to PSU office Standards and PSU Classroom Standards appendices.

D. Doors with lites shall have either flush wood stops or prefinished metal frames. Match other door lites in building if applicable. Provide flush wood stops at exposed wood unrated doors.

2.4 DOOR HARDWARE

A. Von Duprin is a Campus standard for panic & fire exit device hardware.

B. LCN is a Campus standard for door closure.

C. Schlage is a Campus standard for lever hardware.

D. Keying: Provide cores and lock cylinders for use with Campus standard keying systems: FSIC, Full Size Interchangeable Cores.

PART 3 - EXECUTION – Not Used

END OF SECTION 081000

SECTION 08 50 00 - WINDOWS

PART 1 - GENERAL

1.1 DESIGN AND PERFORMANCE REQUIREMENTS

A. When renovating existing buildings with a significant extent of exterior glazing, consider adding a bird friendly film to existing glazing. Where patterns are visible to the human eye, they should support the architectural expression of the building.
   1. New buildings will need to meet requirements for Bird Friendly glazing per the City of Portland. A patterned film or factory install frit pattern could be utilized.

B. When working on historical buildings, windows shall be replaced to match existing.

C. Energy efficient windows should be specified to conform to the minimum requirements of the Oregon Energy Code and have thermal pane glazing units, low-e coating, sun control glass or tinting as appropriate for energy efficiency and daylighting concerns in the design.

D. Windows shall be accessible for cleaning & maintenance. For hard to access windows, accommodations shall be made, or building elements installed, in order to allow for window cleaning and maintenance to be performed safely.

E. First floor operable windows shall have security screens.

F. Security Glazing &Window Films: For added security at retail areas, 1st floor / street level, or pedestrian level glazing, consider security / impact resistant films or impact resistant glass units with built in films beyond general tempered glazing as required by code.

G. Heat & UV Resistant Window Films: Window films may be added to existing single pane exterior glass to increase resistance to UV and reduce heat gain into spaces. Products: 3M film products, professionally installed.

H. View Blocking Window Films: Exterior window screening films may be used to block off views into the building at areas such as mechanical or above ceiling spaces. Avoid using mirror or reflective films. Films should be installed on the interior surface of the glazing to avoid excessive City permitting or UV deterioration.

PART 2 - PRODUCTS – Not Used

PART 3 - EXECUTION – Not Used

END OF SECTION 085000

SECTION 08 71 00 - DOOR HARDWARE

PART 1 - GENERAL

1.1 SUMMARY

A. Codes and Standards: Comply with the version year adopted by the authority having jurisdiction:
   1. All doors to be a complete and functioning, functioning with installation per current Code, ADA and City of Portland BDS.
   2. All hardware to be manufactured, specified, and installed per specifications and standards of the Steel Door Institute and Door & Hardware Institute.
   3. ANSI/BHMA Certified Product Standards - A156 series

B. Related Sections
   1. Division 01 Section - Execution and Closeout Requirements
   2. Division 07 Section - Thermal and Moisture Protection
   3. Division 08 Section - Doors and Frames
   4. Division 10 Section - Toilet Accessories
   5. Division 28 Section - Access Control

1.2 DESIGN AND PERFOMANCE REQUIREMENTS

A. Supply and install all door hardware including temporary lock cylinders; temporary cores (also known as “construction cores”) to be Schlage FSIC temporary cores.

B. Accessibility
   1. ADA hardware at Offices, Restrooms, Classrooms & Exit doors: Existing doors with knobs in work areas shall be upgraded to lever hardware where possible. Door closers shall meet ADA force requirements or be upgraded with new closers.
   2. Confirm doors with ADA operators have adequate mounting areas for opener, switches, latches, motors, and will clear Exit signage.

C. Recessed floor closers shall not be specified.

D. All doors accessing roof tops shall have restricted access. Rooftop door hardware shall allow for exit back into building in order that no person is locked up on roof.

1.3 QUALITY ASSURANCE

A. Verify existing conditions where hardware is to be installed on existing doors & frames, on existing walls, or connected to existing power or signal systems in a building.

B. Verify electrical boxes and conduit runs as required.

C. Verify that mechanical, boiler, or similar rooms have door hardware with 'Storeroom' function for added safety and security. i.e. door is always locked from public side and always free to exit from interior of room.

D. As designs are modified, pay particular attention to occupancy changes, such as for patios, to ensure appropriate hardware is specified for final use.

1.4 COORDINATION

A. Contractor to remove, box up, label and deliver all existing hardware on demolished doors, as shown on the demo plans, in coordination with direction provided by PSU Project Manager (PSU PM) and PSU Lockshop.

B. Review all hardware operation settings with PSU lockshop prior to final City permit inspector review.

C. Deliver keys to PSU Project Manager.

D. Coordinate with PSU Project Manager & PSU Physical Security Manager for all planned card access control system installations.

1.5 SUBMITTALS

A. Provide to PSU Project Manager complete hardware submittal and hardware schedule on all projects for review and approval prior to ordering and construction.

B. Provide to PSU Project Manager at Closeout the complete hardware instructions, operations and service manuals and warranty information.

C. For electrified door hardware, provide to PSU Project Manager a wiring diagram, a schematic diagram, and show locations of power supplies and wire runs.

PART 2 - PRODUCTS

2.1 MANUFACTURERS

A. Preferred door hardware type, manufacturers, and trims:

HARDWARE TYPE	MANUFACTURER	TRIM or SERIES
Cylindrical Lockset	Schlage ND when passage latch. Schlage ND W/Vandlgard when locking.	Rhodes (RHO) Lever Style or Athens (ATH) or to match building style when approved by PSU PM.
Mortise Lock	Schlage L series	06B or 17B
Exit Device #1	Von Duprin 99/98 series for Standard width Jamb (98 Smooth case style)	996L 06 or 17 347T EO (no outside trim)
Exit Device #2	Von Duprin 33A /35A for Narrow Width Jamb (35A Smooth case style)	388 or 360L-06/-17 360T EO (no outside trim)
Exit device lever	Von Duprin	Style 06 (sim to Schlage RHO) or 07 (sim to Schlage ATH)
Delayed Egress Exit	Von Duprin Chexit	996L 06 or 17 EO (no outside trim)
Dead Bolt	L Series	
Electric Strikes	Von Duprin, HES	
Temporary Lock / Cylinder TD	Schlage with FSIC housing	
Door Closer	LCN 4040 series	
Door Opener	LCN Senior Swing	
Hinge, Ball-bearing, NRP	Hager, Stanley, Mckinney	

HARDWARE TYPE	MANUFACTURER	TRIM or SERIES
Hinge, Plain-bearing, NRP	Hager, Stanley, Mckinney	
Manual Flush Bolts	Ives FB457, FB458	
Auto Flush Bolts	Ives FB30/40 series	
Drawer Lock	Olympus 888icp-dw Olympus 920 lm/dm	
Cabinet Door Lock	Olympus 777icp-dr Olympus 920 lm/dm	
Access Panels Lock Cylinders	Olympus 920 lm/dm	
Cylinders	Schlage FSIC, Full Size Interchangeable Core	
Butts	Stanley, McKinney, Lawrence	
Electric transfer hinge	Von Duprin or Command Access	
Key switch	Von Duprin/Schlage	
~~Locksets and latches~~	~~Schlage~~	
Standalone access control	Schlage CO 200 series	
Astragal	Pemko	
Door Stops	Glen Johnson, Ives	
Push Pull	Builders Brass	
Kickplates	Builders Brass, Trimco	
Thresholds and weather stripping	Pemko	
Door operators (ADA)	LCN	Senior Swing Auto-Equalizer
Automatic door sensors (ADA)	BEA	
Door actuators (ADA)	LCN, Camdeu, Curran	
Door holders	LCN SEM Series magnetic hold open, 7800 Series	

2.2 FINISH

A. Match existing building standard or ANSI 626 or US26D, brushed chrome plate finish or similar brushed finish.

2.3 LOCKS AND HANDLES

A. Manufacturer: Schlage or approved equal

1. Lever style RHO (Rhodes) or ATH (Athens) - angled lever with return. With existing buildings, may match lever style & color per PM approval.
2. Use Schlage "ND w/ Vandlgard Series" NDXX
3. Lock functions for various applications are as follows:

FUNCTION	MORTISE PART NUMBER	CYLINDRICAL PART NUMBER
Entrance (EN)	LV9050J 06A or 07A 09-509xL583-363	ND92JD RHO or ATH
Classroom (CR)	LV9070J 06A or 07A	ND94JD RHO or ATH
Storeroom (SR)	LV9080J 06A or 07A	ND96JD RHO or ATH
Privacy (PR)	LV9456J 06A or 07A 09-509xL583-363	-
Passage (PSG)	L9010 06A or 07A	ND10S RHO or ATH

Uses	Function	Notes
Suite Entrance	EN	Allows suite to be unlocked via thumb turn during open hours
Storage/Mechanical	SR	Access via key only
Private Office	EN or SR	Choice of occupant
Classroom	CR	Allows room to be unlocked via key during open hours
Single-use Restroom	PR	Add indicator trim L283-722 "Occupied/Vacant"
Other Private Room	PR	Add indicator trim L283-723 "Do Not Disturb"

4. Pocket door latch 990 series.

B. Cylinder type locksets to be specified for main door hardware type. Mortise type locksets to be specified when approved by PSU PM and when appropriate.

C. Strikes shall be ANSI Type 10-025

2.4 PANIC EXIT OR FIRE EXIT DEVICES

A. Manufacturer: Von Duprin
1. Panic bar devices by Von Duprin 98 Series or 35A Series (narrow profile) for panic or fire exit hardware,
2. Rim latch preferred.
3. Concealed cable function for exit hardware are preferred due to maintenance and security concerns. Concealed vertical rod installations should be discussed with PSU PM & Lockshop.

B. Trim & lever as noted in table above.

2.5 CARD ACCESS DOORS

A. Card access systems to coordinate with existing PSU access control system in buildings and on campus. Systems to include card reader units, transformers, electronic strikes, connection back to control panels. Coordinate hardware with PSU building access control subcontractors.

B. Card Access system to be compatible with existing access control software.

C. Provide access control signage adjacent to card reader and on door that is activated / unlocked. Signage to be installed at main entrances and main office suite entrances. Reference PSU Sign Standards for sign & door sticker, coordinate with PSU Sign Shop.

2.6 BUTTS/HINGES

A. Manufacturer: Lawrence, Stanley, McKinney, Best, Ives, or approved equal

B. Hinges at high frequency doors to be heavy duty ball bearing type in public areas, standard ball bearing hinges in utility-type areas, non-removable pins, 5x5 or 5x4 1/2", and brushed chrome plated brass or steel finish (use brushed stainless steel at exterior & high humidity locations). Min. (3) hinges per door unless (4) are recommended by mfr. due to size, weight, or frequency of use.

C. All other doors & low frequency use doors, use plain bearings, (3) hinges per door, min. with non-removable-pin.

D. Ball bearing hinge are required where door openers and closer are installed.

E. Spring or self-closing hinges shall not be used.

2.7 DOOR STOPS

A. Manufacturer: Ives, Glen Johnson or approved equal

B. Wall mount type WS 407 - 2-1 /2" dia.

C. Other styles as appropriate for installation conditions and as approved by PSU PM.

2.8 SMOKE GASKETS

A. Manufacturer: Pemko or as approved equal.

B. AM 88, black or appropriate alternate color, at all doors where required by code.

2.9 BI-FOLD HARDWARE

A. Manufacturer: Bi-Fold Hardware, Johnson, or approved equal

B. Use complete hardware model #200 FD including track, pivots, butts, ball bearing roller guides, and brackets.

C. Door handles -- 7" wire pulls Baldwin or approved equal

2.10 ADA POWER DOOR OPENER

A. Manufacturer:
   1. LCN Senior Swing Auto-Equalizer 9500 Series
   2. Other LCN Products: To be approved by PSU PM.

B. Complete electric opener mounted at interior of exit doors to include ADA logo actuator buttons at each side of door - coordinate with key card access at exterior. Retro-fit for ANSI 10-025 electric strike. Actuators ADA wall mount each side of door. Satin chrome finish or brushed aluminum finish UON.
   1. ADA power door opener to have electrical disconnect switch mounted directly above the opener. If this is not possible, confirm best location with PSU PM.

2. ADA power door opener to be powered via dedicated circuit breaker in nearest available electrical panel.

C. ADA buttons shall be hardwired in new construction.
1. The buttons must be between 34” and 48” above the ground or floor. Match height of existing buttons and card readers when possible. A full height button for foot tap activation may be considered where appropriate.
2. The buttons must be placed between 1’ and 5’ from the door.
3. The buttons must be placed in such a way that they are accessible whether the door is open or closed and such that the swing of the door would not impact a person using the door.
4. The buttons must be placed within sight of the door.
5. If the ADA button cannot be located within these restraints, approval by PSU Architect is required.
   a. If more than 7’ from the center of the door, a time delay of two (2) seconds shall be added for each additional foot.

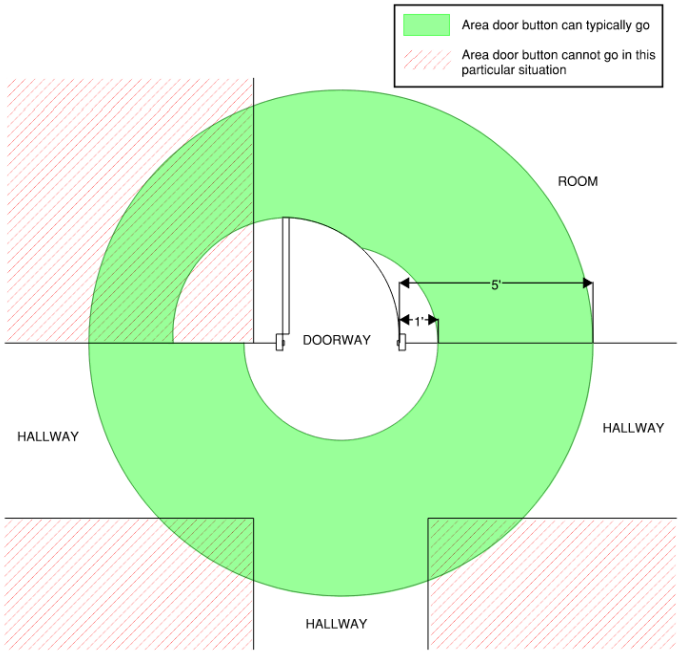

Figure 1: Mounting Range for ADA Push Button

PART 3 - EXECUTION

3.1 INSTALLATION

A. Install all hardware per manufacturer's installation instructions, templates, and recommendations.

B. For installation of locks, use manufacturer’s fasteners that come with the hardware.

C. For installation of door closers, use manufacturer’s wood/metal fasteners pack; do not use self-tapping sheet metal screws.

D. Prefer door assembly installation of welded 16-gauge door frames for break-in deterrent.

END OF SECTION 087100

SECTION 09 60 00 - FLOORING

PART 1 - GENERAL

1.1 SUMMARY

A. Key goals when approving and specifying flooring are ease of maintenance and cleaning; durability; and use of sustainable products.

1.2 REFERENCES

A. Carpet and Rug Institute's Green Label Plus program, https://carpet-rug.org/testing/green-label-plus/

B. International Living Future Institute (ILFI), “Red List of Chemicals and Materials,” https://living-future.org/declare/declare-about/red-list/

1.3 DESIGN AND PERFORMANCE REQUIREMENTS

A. Durability is of prime importance. All finish products must be appropriate to the use of the space.

B. All materials and finishes should contain the greatest percentage of post-consumer recycled content as possible.
   1. Use finishes from rapidly renewable sources whenever possible.
   2. Specified flooring should be recyclable at the end of their life.

C. Where possible locally manufactured products should be used.

D. Coatings, sealants, adhesives, composite wood, carpet and agrifiber products must have low or zero VOC content.

E. PSU will consider the installation of new products on the market if they meet the above criteria. If new products on the market are proposed, the benefits of using these products must be fully documented and may be installed only if approved by PSU Project Manager.

F. To the greatest extent possible, avoid using chemicals, adhesives & materials that are included on the ILFI “Red List of Chemicals and Materials”

1.4 MAINTENANCE

A. Finish products must be easy to maintain and clean.
   1. Special cleaning or proprietary maintenance products shall not be used.
   2. Preference for installed materials that do not need to be waxed or sealed or otherwise treated to maintain a clean look.
      a. VCT flooring is a common material used on Campus and continues to be used and maintained with sealers. Product may be considered for future projects.
   3. Flooring products should be easy to repair and replace
   4. Modular tile products are preferred where applicable. Ie Carpet tiles, VCT or similar flooring tiles.
   5. Restroom flooring should have minimal texture for ease of cleaning, yet still slip resistant when wet. Restroom floors should be selected to handle high use and chemical cleaners.

PART 2 - PRODUCTS

2.1 CARPET

A. Carpet is a common flooring material throughout the Campus. Carpet should be installed in tiles or planks rather than broadloom. Broadloom installation should be reserved for interior stairs when needed and as a replacement for existing stair carpet installations.

B. Carpet shall have a low pile height and not be installed over a pad. Carpet pads or deep pile heights is more difficult for wheelchair users to maneuver.

C. Carpet and adhesives should be certified by the Carpet and Rug Institute's Green Label program. For carpet tiles, consider specifying tape dot or corner tape installation methods, especially where full adhesion spread over the existing floor, such as bare concrete, may not be preferred. Utilize sealer coat over existing adhesive residue prior to installation of new carpet with new adhesive.

D. Carpet may be specified in most areas. Avoid carpet use are in the following locations:
1. Laboratories
2. Restrooms
3. Kitchens – a section of resilient sheet goods or tiles should be installed to span the wet areas and carpet installations. Ie resilient tile, linoleum, LVT, VCT, or similar.
4. Stairwells (Except where approved for use in Housing building stairwells or to replace existing carpet installations at older offices.)

2.2 WALK OFF CARPET

A. Manufacturer: Forbo,“Coral Brush”, Patcraft “Foor in the Door II”, Shaw “Step on it” “Succession II”, or other superior non, highly durable, texture carpet, or similar.

B. At building entry ways, consider durable walk off carpets designed to collect dirt and moisture from foot traffic. Walk off matts should be permanently fixed in place in designated areas at each exterior entrance.

C. A length of 10'-20' in the direction of travel is preferred to provide for an adequate number of ‘foot falls’ before reaching standard carpeted areas.

D. Use of sheet goods is acceptable; modular tiles are preferred where heavy wear may require replacement of individual tiles.

E. Use of formed walk off mats should only be used to extend a walk off area during heavy weather and not as a permanent or long-term solution.

2.3 RESIN FLOOR

A. Manufacturers: Silikal resin coatings, or Stonhard epoxy coatings or approved equal.

B. Prefer epoxy or resin floor coatings with integral coved wall base where appropriate in restrooms.

2.4 SHEET FLOORING

A. LVT tile products are preferred in the following locations. LVT (luxury vinyl tile) & LVP (luxury vinyl plank) tiles are preferred over sheet productions and linoleum.
1. Areas where food and drink are served or allowed
2. Elevators, entryways or vestibules
3. Kitchens and kitchenettes
4. Corridors and hallways
5. Classrooms, meeting rooms

B. Sheet flooring may be used at wet areas such as wet labs, food & drink areas, kitchenette and breakrooms. Confirm with PM between using sheet goods or LVT tile products.

C. Linoleum has been used in tile form as a substitute for VCT tiles on campus in non-wet locations. (Ie elevator cabs.) Natural linoleum may be replaced with new, more durable, and prevalent LVT (luxury vinyl tile).

2.5 RUBBER FLOORING

A. Manufacturers: Roppe, Johnsonite, Nora Flooring or as approved by PSU Project Manager.

B. Rubber flooring is acceptable throughout facilities with exception of restrooms and main entry, high traffic areas as it is difficult to clean.

C. Rubber flooring has been used in Labs & Lab area corridors.

D. Prefer rubber products with recycled content.

E. Sheet goods or tiles as appropriate for use.

F. Avoid rubber flooring in high traffic.

2.6 TILES AND OTHER REFRACTORY MATERIALS (E.G. BRICK, CLAY OR TERRACOTTA TILES)

A. Smooth, finished epoxy flooring and other refractory materials are preferred in the following locations (although contiguous epoxy flooring may be better suited for cleaning and durability in kitchens, serving, and dish cleaning area.)
1. Kitchens, Commercial Kitchens, Cleaning/ Dish rooms, and Serving Areas
2. Entryways and vestibules, higher traffic corridors.

B. Any ceramic or quarry tile installation shall be discussed with PSU Project Manager for approval.

C. Do not use ceramic and clay tiles in restrooms, unless approved by PSU Project Manager. An epoxy floor coating is preferred.

2.7 STONE AND TERRAZZO FLOORING

A. Stone and terrazzo flooring may be used only in select or special locations and as approved by PSU Project Manager. These products have been difficult to repair and patch.

2.8 WOOD FLOORING

A. Wood should only be used in areas where wood is required by specific needs such as:
1. Sports, dance or other recreational spaces
2. Where matching adjacent wood flooring materials as may be present in residential / housing units

B. Wood flooring is to be used only when specifically approved by the PSU Project Manager.

C. In all locations where wood flooring is used, FSC Certified wood products are preferred and should be specified if possible.

2.9 CONCRETE FLOORING

A. Exposed Concrete flooring (regular or colored) are acceptable in high traffic areas (e.g. hallways).

B. Avoid use where there is a potential for heavy staining or chemical exposure.

C. Exposed concrete shall be sealed with an anti-stain coating or sealer and have seams sealed with epoxy or similar materials.

D. The use of recycled concrete aggregate or other recycled ingredients, such as fly ash, is encouraged when available.

E. If concrete flooring is used, it needs to be burnished or polished.

F. Concrete finishes including polishing, staining, sealing should be considered by project & situation.

G. Concrete may also have an epoxy coating.

2.10 WALL BASE

A. Rubber wall base – coved or straight
   1. Rubber base is preferred at carpet, LVT, linoleum, or other sheet vinyl style floors.
   2. Colors as appropriate: Black is common on campus.
   3. Rubber core materials: Rubber core materials are preferred for longevity and workability. Avoid use of vinyl or vinyl mix base products.
   4. Sizes:
      a. 4” rubber base is common across campus, other sizes approved as needed for varying conditions including the use of taller, 4” coved rubber base is preferred in all locations except as noted below.
      b. 4-1/2” rubber base is common where 4” was removed and saves needing to repaint walls when only carpet & base are being replaced. This size covers the 4” gap.
      c. 6” base to cover wall damage or where frequent wet floor cleaning is required and additional wall protection is needed (i.e. Kitchens or small restrooms).

B. On stairs, use separate rubber riser and tread components. One-piece units have been susceptible to damage and breaking when not firmly supported at horizontal to vertical transition. When using rubber treads, consider rubber side stringers as a part of the stair covering system.

C. Ceramic tile base shall be used in conjunction with ceramic or porcelain tile flooring installations when approved.

D. Wood base is to be used only when matching existing wood base or when approved by the PSU project manager.

E. Coved Base: With sheet flooring at wet areas, the sheet materials should be coved up the wall 4"-6" and capped. Avoid in stairs.

F. Epoxy Flooring: With epoxy floor coatings such as Silikal, Stonhard, or similar, coating shall be used to form the coved wall base up wall 4-6” and be contiguous.

2.11 EXCEPTIONS

A. Exceptions to the above flooring installations must be approved by the PSU Project Manager. Some examples of possible exceptions are:
   1. When matching an existing installation.
   2. Special uses such as in anti-static flooring situations, for special labs, clean labs, machine rooms, etc.
   3. Unavailability of alternative product options.
   4. Raised floors at computer or data centers or special office areas.

PART 3 - EXECUTION – Not Used

END OF SECTION 096000

SECTION 09 70 00 – WALLS, WALL FINIHSES, ACOUSTIC TREATMENT, AND PARTITIONS

PART 1 - GENERAL

1.1 SUMMARY

A. Key goals when approving and specifying products in this section should be to have products that have an ease of maintenance and cleanability, are designed for durability, and are made as sustainable products.
   1. Products must be easy to maintain and clean. No special cleaning or proprietary maintenance products must be required. It is preferred that installed materials do not need to be waxed or sealed or otherwise treated to maintain a clean look.
   2. Durability is of prime importance. All finish products must be appropriate to the use of the space.
   3. All materials and finishes should contain the greatest percentage of post-consumer recycled content as possible. Use finishes such as flooring or millwork materials from rapidly renewable sources whenever possible. In addition, specified products should be recyclable at the end of their life.
   4. Paints, coatings, sealant, adhesives, composite wood, carpet and agrifiber products must have low or zero VOC content.
   5. Where possible locally manufactured products should be used.
   6. To the greatest extent possible, avoid using chemicals, adhesives & materials that are included on the "Red List of Chemicals and Materials" as designated by the International Living Building Institute.
   7. Restricted Materials: Avoid specifying or using materials that may contain even trace amounts of asbestos or Dimethyl Carbonate or similar restricted materials.

B. Related Sections
   1. Appendix 01.9 - PSU Office Furniture Standards

1.2 REFERENCES

A. ANSI S12.60-2002, "Acoustical Performance Criteria, Design Requirements and Guidelines for Schools"

B. International Living Future Institute (ILFI), "Red List of Chemicals and Materials," https://living-future.org/declare/declare-about/red-list/

1.3 DESIGN & PERFORMANCE REQUIREMENTS

A. Wall framing, typical composition min. 20-gauge x 3-½" wide metal studs at 16" on center with 5/8" Type X gypsum board on each side.

B. The use of modular wall systems such as demountable wall surfaces are allowed and must be discussed with PSU Project Manager before specification.

C. Acoustic treatment shall be durable and repairable within the touch zone uses of perforated gypsum board is prohibited.

D. Add corner guards at high traffic locations. Stainless steel or paintable metal.

E. Corner Guards: Stainless steel wall corner guards can be specified in high impact, high traffic areas such as in classrooms or corridors. Metal edges should be smooth, rounded or hemmed, or protected with edging along sharp edges.

F. Wainscot: Stainless steel wainscot can be specified in high abuse zones of service corridors, loading areas, and sanitary locations. Specify heavy gauge: 16ga to 1/8" as appropriate.

PART 2 - PRODUCTS

2.1 OPEN OFFICE PARTITIONS AND OFFICE PANELS

A. Manufacturer: Herman Miller, Steelcase, latest in Appendix 01.9 Furniture Standards, or PSU PM approved

B. Steelcase Kick Panel System
   1. Panel Height: 42”, 48” or 54”
   2. Panel Width: 24”, 30”, 36”, 42”, 48” or 60”
   3. Optional Glass Stacker: 12”
   4. Frame Finish: Seagull
   5. Fabric Finish: Alloy - Bubbly

C. Herman Miller
   1. Panel Height: 39” or 53” or as needed for desired layout or to match existing systems furniture.
   2. Optional Glass Stacker: 14”h (clear or frosted)
   3. Frame Finish: Folkstone Gray 8Q
   4. Fabric Finish: Chain Springwood (2V08)

2.2 FRAMED WALLS

A. Standard Common Framed Walls & Partitions: In most areas, wall framing shall be 20 gauge steel stud framing. Sizes: 2-1/2”, 3-1/2”, 3-5/8”, 6” and as needed or as specified for structural strength requirements.

2.3 WALL FINISHES – GYPSUM BOARD

A. Wall finish most commonly used includes gypsum wall board or older plaster wall surfaces, primed and painted.

B. Standard Gypsum Board: 5/8” Type X fire resistive gypsum board materials.

C. Increased durability in higher traffic or abuse prone areas such as corridors may warrant abuse resistant or impact resistant gypsum board.
   1. Example manufacturer and products include the GP Georgia Pacific ToughRock Abuse or Impact resistant fiberglass faced materials.
   2. Other manufacturers may add thicker paper faces to the finish side for similar properties.

D. Water resistant gypsum board with fiberglass face or water-resistant core materials shall be specified in wet, damp, or high humidity prone areas.
   1. Example manufacturer and products include the GP Georgia Pacific ToughRock Abuse or Impact resistant fiberglass faced materials.

E. Acoustic treatments on gypsum board shall have a repairable touch zone. Gypsum materials with perforations for acoustic sound attenuation shall have the perforations start above the common touch zone in order to be repairable.
   1. Wall chair rail materials: Chair rail strip plastic or other strip materials 6-12” height inline with chairs & table in the room. See Wall Protection section below.

2.4 ACOUSTIC WALLS AND PARTITIONS

A. Manufacturer: Rockwool, Roxul, Owens Corning, Johns Manville, GAF, or approved equal.

B. It is standard PSU practice to acoustically insulate all new walls and partitions with an approved sound or acoustic batt insulation to match wall thickness.

C. Acoustic wall panels shall be durable, paintable materials within the touch zone in public areas.

D. Fabric wrapped foam or fiber insulation panels shall have cleanable, repairable surfaces within the touch zone or be installed higher on walls where damage is less likely.
   1. I.e. fabric wrapped foam or fiberglass panels work in small conference rooms; rigid fiber panels that are paintable work better corridors, or large assembly spaces at lower levels with fabric or foam panels at higher levels.

E. Acoustic panels should be specified with sustainable or recycled materials when possible.
   1. Rockwool & Roxul (mineral wool, rock wool) materials may have formaldehyde in the binder of the materials and would not be preferred at interior spaces.
   2. Fiberglass materials without formaldehyde would be preferred.

F. Verify acoustical insulation requirements according to room use (e.g. offices, classrooms, bedrooms) and consult with project architect or engineer for additional sound attenuation measures including:
   1. Additional layers of gypsum wall board on one or both sides of a wall,
   2. Additional ceiling batt insulation or acoustic tiles,
   3. Acoustic wall panels,
   4. Acoustic isolation furring channels,
   5. Wall perimeter sealant.

G. Follow guidelines in ANSI S12.60-2002, "Acoustical Performance Criteria, Design Requirements and Guidelines for Schools" and LEED.

2.5 WALL PROTECTION

A. Provide corner guards at high traffic locations such as in corridors.

B. Provide wainscot sheet or panel materials at corridors where standard gypsum board would show signs of heavy wear.

C. Provide 12” band of PVC or similar material at chair rail or chair / table height in classrooms.
   1. Products used on campus in similar locations include: Inpro wall protection materials.

D. Ceramic Tiles: Tiles can be specified as a wall wainscot, wet wall surfacing, or countertop backsplash in select locations. Confirm with PSU PM when proposed.

PART 3 - EXECUTION - Not Used

END OF SECTION 097000

SECTION 09 90 00 – PAINTS AND COATINGS

PART 1 - GENERAL

1.1 SUMMARY

A. Key goals when approving and specifying paint are ease of maintenance and cleaning; durability; and use of sustainable products.
   1. Finish products must be easy to maintain and clean. No special cleaning or proprietary maintenance products must be required. It is preferred that installed materials do not need to be waxed or sealed or otherwise treated to maintain a clean look.
   2. Durability is of prime importance. All finish products must be appropriate to the use of the space. Where possible locally manufactured products should be used.
   3. All materials and finishes should contain the greatest percentage of post-consumer recycled content as possible.
   4. Where possible locally manufactured products should be used.
   5. To the greatest extent possible, avoid using chemicals, adhesives & materials that are included on the “Red List of Chemicals and Materials” as designated by the International Living Building Institute.

1.2 REFERENCES

A. International Living Future Institute (ILFI), “Red List of Chemicals and Materials,” https://living-future.org/red-list/

1.3 DESIGN AND PERFORMANCE REQUIREMENTS

A. All paint must be low or no VOC products. VOC level to be 50 g/L or less.

B. Interior Paint Finish: Satin finish at high traffic, common areas (Restrooms, Hallways) Eggshell at general areas. Satin or Gloss finish in other areas as approved.

C. Exterior Paint Finish: Satin finish and/or semi-gloss at exterior as appropriate.

D. Dry erase wall paint finish where specified to include adjacent washable surfaces. A clear line or color change at dry erase areas should be included to denote surface change.

E. Provide first coat of primer/sealer or self-priming paint for new gypsum board.

F. Provide 1-2 finish coats in color & sheen specified.

G. Label surplus paint: At a minimum, Contractor shall clearly label surplus paint products with: Date, location of use, brand, color name or code, paint type, sheen, & formula if available.

H. Provide washable paint surfaces adjacent to dry erase marker boards in classrooms, Conference rooms, and study areas. Coordinate finishes with location of dry erase boards or painted dry erase wall areas.

I. The use of intumescent paint shall be avoided. Confirm with Project Manager

PART 2 - PRODUCTS

2.1 MANUFACTURERS

A. As noted or approved equal by PSU Project Manager.

2.2 CLEAR COATINGS

A. Manufacturer: Target Coatings, Inc., Minwax, Old Masters, and Howard.

B. Emtech EM6000 WB Water based acrylic lacquer, Satin or Semi-gloss.
   1. Designed to replace flammable nitrocellulose-based finishes on furniture, cabinet, interior architectural and custom woodworking applications.

C. Emtech EM8000cv WB Pre-catalyzed waterbasee conversion varnish for an Ultra-low VOC, HAPS-free, water-reducible, one part coating system.

D. Minwax: Polyurethane satin or semi-gloss.

2.3 PRIMERS

A. Manufacturer: Zinsser, Corrseal, Rust-Oleum, and Miller.

B. Zinsser: Water base Drywall Primer, low VOC, for new drywall

C. Zinsser: B-I-N Advanced Synthetic Shellac Primer White

D. Zinsser: Odorless Oil-base stain blocker, primer, low VOC, seals stains from water, smoke, & fire damage.

E. Zinsser: Cover-Stain, Oil-base Primer, odorless.

F. Zinsser: Gardz problem Surface Sealer.

G. Corrseal: Rust conversion to metal water-base.

H. Miller: Builder prep-coat primer for drywall: Miller Exterior paint Acro-lite, Evolution, and Satin Sheen.

I. Miller Paint: Builder acrylic primer or similar as appropriate to base materials.

J. Zinsser: B.I.N. Interior Multi-purpose, advanced synthetic shellac primer, sealer, stain blocker, White or Clear.

K. Rust-Oleum: various primers for metal and wood

2.4 WALL FINISH, GYPSUM BOARD

A. Manufacturer: Miller Paint “Acro-Pure” satin, low VOC, PPG Rust Oleum, and approve equal.

2.5 SPECIALTY

A. Manufacturer: PPG, Rust-Oleum, Sherwin Williams, and approve equal.

B. PPG:
   1. Deft Polyurethane water based for wood surfaces.
   2. Deft lacquer nitrocellulose, sanding sealer, and finish brushing lacquer for clear wood finish coats.

C. Dry Erase Walls: Rust-Oleum Specialty, Dry Erase Paint kit, water based 2-part Polyamine Epoxy Blend.
   1. It is no longer preferred to have walls painted – preference is to have quality marker board installed on walls.

D. High Temp: Sherwin Williams: Silver-Bright Aluminum Paint, Oil-based, high heat to 400F such as for heat radiators.

2.6 PREP-PAINT

A. Manufacturer: Jasco, Simple Green, and approve equal.

B. Jasco: TSP Substitute, no-rinse one-step formula for surface prep before painting.

C. Simple Green, all-purpose cleaner

2.7 EXTERIOR PAINT

A. Manufacturer: Miller and approve equal.

B. Miller Paints:
1. Evolution 100% Pure Acrylic Exterior Coating
2. Acrimax, exterior waterborne acrylic coating.
3. Acrimetal DTM rust inhibitive exterior acrylic coating for metal or tight rusted metal as primer/finish.

2.8 INTERIOR PAINT

A. Manufacturer: Miller / Rodda, PPG, or approve equal.

B. Miller Paints / Rodda Paints: Acro-Pure, ultra-low VOC acrylic, water based

C. PPG: PPG "Pitt-Glaz WB1". Interior High Performance pre-catalyzed waterborne epoxy – eggshell. Ultra-durable, water-borne interior/exterior paint, for wall & door, door frames & trim, plastics, wood and concrete floors. Zero VOC, low odor.

2.9 PAINTED METAL DOORS, AND METAL DOOR & RELITE FRAMES

A. PPG " Pitt-Glaz WB1" or as approved by PSU Project Manager, water base, satin sheen.

B. Waterborne Epoxy for use on metal.

C. Primer and (2) finish coats.

D. Must be cleanable.

E. VOC level spec 0 g/L.

2.10 DRY ERASE WALLS

A. Rust-Olem Dry erase water based, 2-part urethane or other manufacturer as approved by PSU Project Manager.

B. Water based preferred over high-VOC oil based products.

2.11 INTERIOR WOOD CLEAR FINISH

A. Miller Paint "Nu-Wave" or as approved equal, water based, satin sheen, clear natural coating for wood

B. Four (4) coats.

2.12 INTERIOR WOOD FINISH & STAINS

A. Manufacturer: Target Coatings, Minwax, Old Masters, Deft, and approve equal

B. Minwax:
1. Oil stains.
2. Polyurethane satin or semi-gloss.

C. Old Masters: Gel Stain for nonporous surfaces and wood.

D. Deft lacquer nitrocellulose for clean coats.

2.13 LINSEED OIL

A. Valspar or as approved by PSU Project Manager.

2.14 WOOD FLOOR COATINGS

A. Natural clear coating, brush applied, water based polyurethane.

B. Products: Impax epoxy floor coating, Bona, Mega Seal WB, Varathane, and Deft or approved equal.

2.15 PARKING STRIPES AND PAINTED SIGNAGE ON PARKING DECK

A. Miller Paint, Setfast Waterborne pavement marking paint, or as approved by PSU Project Manager.

2.16 PAINT COLORS

A. The following paint colors are approved PSU colors. Wall and ceiling colors must be limited to these, unless approved by PSU Project Manager:
   1. Beryl Pearl 0509W
   2. Composed CW048W
   3. Apple Peel CW030W
   4. Crystal Ball E0158
   5. Wafer E0119
   6. Sterling Coin E0159
   7. Burbury Beige E0118
   8. Popular E0140
   9. Fossil E0152
   10. Hot Chocolate E0145
   11. Thai Silk E0107
   12. Deep Waters E0025
   13. Spring Tulip Red 0101
   14. Cupola Yellow E0076
   15. Savannah E0059
   16. Caliente E0097
   17. Hazel E0024
   18. Alfalfa Sprouts E0054
   19. Serenity E0045
   20. Haven E0046
   21. Tranquil E0036
   22. Aloe E0058
   23. Showers E0030
   24. Temper E0005
   25. Rapids E0017
   26. Pale Organza H0018W
   27. September Leaf 7744M
   28. Lil Melon 06 M 1909
   29. PSU Green 06 M 2612
   30. PSU Accent Green 07 M 0715
   31. PSU Brown 020 13 0864
   32. PSU Sienna 06 M 2418
   33. PSU Red 10 M 1160
   34. PSU Orange 020 14 2772
   35. PSU Yellow 020 21 1681
   36. PSU Tan 020 18 1276
   37. PSU Gray 09 C 0829
   38. PSU Purple 020 21 1682
   39. PSU Blue 020 16 2861
   40. PSU Light Blue 020 21 1683
   41. Queen Annes Lace 0558W

2.17 PAINT ACCESSORIES: INTERIOR JOINT SEALERS

A. Silicone GE, Dow, DAP or as approved by PSU Project Manager.

B. Use sanitary type in bathrooms

2.18 EXTERIOR ANTI-GRAFFITI COATING

A. Manufacturer: “World’s Best Graffiti Coating” or approve equal.

B. Clean and two (2) coats.

C. Concrete, masonry, metal substrates.

PART 3 - EXECUTION

3.1 INSTALLATION

A. In all cases paint to be applied with primer and minimum two finish coats of final paint color & sheen.

B. Paint all areas/surfaces that are part of renovation or new work. At patching and tie-in work, extend new paint to nearest corner of wall

C. Apply anti-graffiti treatment to the exterior of the building from ground level up to the second level or approx. 10’-0”.

END OF SECTION 099000

SECTION 10 14 00 - SIGNAGE

PART 1 - GENERAL

1.1 SUMMARY

A. Exterior Signage
   1. Conform to latest City of Portland codes and standards and latest ADA standards for installation locations. A City sign permit may be required for exterior signage on buildings

B. Interior Signage
   1. Conform to PSU Signage & Wayfinding Standards
      a. Any deviation must be approved by CPC Architects
      b. Existing construction shall conform to existing building sign standard when it exists.
      c. Existing signage may need to be replaced if not fully compliant with ADA or other code requirements.

C. Related Sections
   1. Section 01 58 00 - Temporary Signage
   2. Appendix - Office Standards
   3. Appendix - Classroom Standards
   4. Appendix - PSU Signage & Wayfinding Standards

1.2 DESIGN & PERFORMANCE REQUIREMENTS

A. Innovative site specific directional, wayfinding, and placemaking signage is encouraged and must be approved by CPC Architects.

B. Precision fabricated from sheet or plate in the thickness and sizes indicated on drawings.

C. Edges shall be square to face of letter and free from cut marks or other imperfections.

D. Corners and kerfs shall be square, or as indicated on the drawings.

PART 2 - PRODUCTS

2.1 SIGNAGE MATERIAL STANDARDS

A. Refer to Section IV of CPO Signage & Wayfinding Standards for signage template technical specifications

B. All materials for permanent signage should have a minimum durability of 5 years and an ideal durability of at least 10 years.

C. Acceptable materials:
   1. Polished Bronze letters on Charcoal Granite
   2. Painted Wood
   3. Fabric
   4. Stainless Streel Cut Letters with Brushed Finish
   5. Anodized Aluminum with Clear Satin Finish
   6. Pressure Sensitive Vinyl on Glass (white)
   7. Solid color Photopolymer Plastic (white on black)
   8. Non-Glare Matte clear Acrylic
   9. 20% Cool Grey Vinyl Wrap
   10. Aluminum Finish - Fine satin, clear anodized

D. Acrylic Signs
   1. Face: Clear, non-glare, optically corrected, cast virgin acrylic sheet. Edges and surfaces to be straight, smooth, and true.
   2. Substitute for extruded acrylic as approved by PSU Project Manager

E. PVC Signs
1. PVC materials may not be used in new construction or in existing construction in a LEED rated building

F. ADA/Tactile Signs
1. Thermoformed Tactile signs (PSU Preferred method)
   a. Thermoform using solid acrylic Messages to comply with ADA Guidelines.
   b. Contractor shall be responsible for all text translation from English to Grade II Braille.
2. Photopolymer Tactile signs
   a. Must be approved by PSU Project Manager.
   b. Photochemically etch to create message to comply with ADA Guidelines using JET USA LSL148AB Photopolymer or equivalent.
   c. Contractor shall be responsible for all text translation from English to Grade II Braille.
   d. For exterior sign locations fabricate using exterior grade photopolymer Jet#388EX, or equal.
3. Raster Method Tactile signs
   a. Must be approved by PSU Project Manager
   b. Precise laser cut or engraved acrylic (or equivalent) letters bonded to sign face. Messages to comply with ADA Guidelines.
   c. Contractor shall be responsible for all text translation from English to Grade II Braille

G. Aluminum and Steel
1. Coat with Matthews Acrylic Polyurethane (MAP) or equivalent, Ultra Low VOC product.
2. Match colors and gloss as indicated.

H. Acrylic and Photopolymer
1. Coat with Matthews Tie Bond, 74-777SP or as per manufacturer's recommendations. Followed by Matthews Acrylic Polyurethane (MAP), Ultra Low VOC product.
2. Match colors and gloss as indicated.

I. Painted material
1. Provide protective clearcoat over all painted surfaces. Use Matthews Acrylic Polyurethane (MAP), Super Satin Clear 290 228SP, or equivalent

J. Pressure Sensitive/Vinyl Graphics
1. All lettering shall be executed in such a manner that all edges and corners of letter forms are true, clean, and photographically precise and accurately reproduce the typeface. Messages shall be smooth and free of air bubbles, open cuts, bulging and foreign matter between message and application surface.
2. 3M vinyl sheeting; or equal. DM 7125 or 3M 7725 are preferred cut vinyl, other as approved.
3. 3M Fasara Milano (SH2MAML, milky white) for frosted vinyl applications to windows. Other as approved.
4. Avery A9 "Olive Green" may be used to represent PSU Green (Pantone 7496U) when a solid color vinyl is required

2.2 MINIMUM COATING THICKNESS

A. To preserve finishes support longevity of material. Dry film thickness and application procedures to be in strict accordance with manufacturer's recommendations. Apply each material at not thinner than manufacturer's recommended spreading rate. Provide a total dry film thickness of entire coating system as recommended by manufacturer, unless otherwise indicated.

B. Silicone
1. FS TT-S-001543B, Class A, silicone sealant #1200, General Electric Company; or equal.
2. Use liquid silicone adhesive as specified to attach sign units to irregular, porous, or vinyl-covered surfaces.

C. Epoxy
1. Acceptable products include #NP-428, Miracle Adhesives Corporation; Chemlok #304, Hughson Chemical Division of Lord Corporation; or equal
2. Epoxy shall be two-component thermosetting epoxy adhesive with 100% solids content.

2.3 ADHESIVES

A. General: Provide low or no VOC adhesives.

B. Very High Bond (VHB) Adhesive
1. Manufacturer: 3M Company or product as recommended by manufacturer appropriate for type of use, materials, and fabrication
2. 3M 4941 VHB is appropriate for most wall mounted signs on painted surfaces or glass.
3. Use 3M product as specified for mounting signs to smooth, non-porous surfaces as indicated on the drawings. Do not use this method for vinyl-covered or rough surfaces.

C. Foam Tape
1. Manufacturer: 3M Company or equal
2. Double faced pressure sensitive foam tape.

2.4 MECHANICAL FASTENERS

A. Material: Galvanically compatible with adjacent materials

B. Fastening devices between dissimilar materials shall be 300 Series non-magnetic stainless steel

PART 3 - EXECUTION

3.1 INSTALLATION

A. General
1. Install per manufacturer guidelines, preserving manufacturer warranty where applicable
2. Install sign units level, plumb and at the height indicated, with sign surfaces free from distortion or other defects in appearance.
3. Locate signs and accessories where shown or scheduled, using mounting methods of the type described and in compliance with the manufacturer instructions.
4. Notify PSU Project Manager of installation conflicts.

B. Location
1. Exterior doors with auto operators shall have signage stickers and placards indicating ‘Card Access’.
   a. Apply to the door that is operated by the opener.
   b. Install signage next to the badge access pad indicating that it operates the door with ‘Student ID’ or similar language.
   c. Coordinate with PSU Capital Projects & Construction, Campus Public Safety, and the Facilities sign shop.
   d. Include “Swipe Badge for Building Access” sign with swipe logo above or adjacent to card reader.
   e. Install Card Swipe access sticker on entry door that opens with card access, install near handle.
   f. The pair of signs / stickers should be included at main entrances, especially areas with multiple doors where it may not be evident which door unlocks when badge is swiped. Not required at single doors or where unlatching may be obvious. (See image below *Figure 1*, signs will be included in PSU Sign Standards when it is next updated.)

2. Sign location plan and message schedule shall be submitted to PSU Project Manager.
3. ADA compliant tactile sign is required at all entrances to interior spaces where a functional door is present. Spaces shall be marked with proper room number with the exception of RESTROOMS, LACTATION ROOMS, and exit routes, which shall be marked appropriate to their use.
4. All rooms with permanent features, such as kitchens, electrical, mechanical, telecom, etc. shall be marked with ADA compliant tactile signs that contain both the room number (first) and the room function(s).
5. Within stairwells a code compliant sign indicating the level and additional required information is required at each stair landing. Additionally, a separate ADA compliant tactile sign shall be placed at all doors leading off the stairwell. A tactile star shall be included at the exit level.
6. Room numbers will be determined by campus space analysts.
7. Floor maps and floor directories shall be placed near elevators on all publicly accessible levels.
8. Building directories shall be placed near all major building entrances or near elevators on all levels where building entrances exist.

9. Maps specifying emergency egress routes shall be located near all egress stairways, in elevator lobby, and as specified by code.
10. Directional signage shall be placed at any major decision point. Classrooms, office suites with reception area, restrooms, elevators, and stairs are the priorities on this signage.
11. Include “Do not block exit” signs where there is a likelihood that people will move furniture and block required exits.
12. Include “roof access” signage at roof doors and hatches.

C. Mechanical Fasteners
1. Install signs securely to wall with fasteners and anchoring devices. Do not use metals which are corrosive or otherwise incompatible with metals joined.



Figure 1 - Badge Access Sign & Door Sticker

END OF SECTION 101400

SECTION 10 20 01 - LACTATION ROOMS

PART 1 - GENERAL

1.1 SUMMARY

A. In accordance with the 2010 Patient Protection and Affordable Care Act amended section 7 of the Fair Labor Standards Act ("FLSA") and the Oregon Revised Statutes (ORS) 653.077, Portland State University has designated certain private lactation rooms for students and employees who are expressing milk by manual or mechanical means.

B. Scope & Guidelines
1. The lactation room guidelines in this document apply to the construction of new buildings and major renovations of existing buildings. When feasible, these guidelines will be implemented in existing buildings that are not slated for renovation or that do not currently have lactation rooms.
2. In all new construction and major renovations at least one lactation room will be created for any building larger than 50,000 gsf. For buildings smaller than 50,000 gsf, a lactation room will be included, if there are no adjacent buildings with lactation rooms.
3. Size of new lactation rooms
   a. New construction and major renovation: Shall be at least 100 sf in new construction and major renovations.
   b. Existing buildings that are not undergoing renovations: Based on existing space, but should never be less than 80 sf, although 100 sf is still preferred to accommodate changing table, accessibility clearances, and furniture.

C. Related Sections
1. Div 01 - Accessibility & Universal Design
2. Div 08 - Door Hardware
3. Div 08 - Windows
4. Div 10 - Signage
5. Div 11 - Miscellaneous Equipment

1.2 DESIGN & PERFORMANCE

A. Requirements
1. Room shall be on an accessible route/floor. All accessories, equipment, furniture and casework shall be provided and installed to comply with ALL accessibility clearances and regulations.
2. Room shall be easily accessible and easy to find. Wayfinding signage will be provided throughout the building and will be included in all building directories, floorplan maps, and all wayfinding signs on the floor level the room is located on.
3. Room shall have a keypad lock, latch/deadbolt. Ideally when the latch is in the locked position, the exterior hardware displays the word "occupied."
4. When converting current spaces with windows, sidelight and/or doors with relights, they shall be modified or detailed to provide visual privacy to the space. Window treatments should match the overall building standard.
5. Frosting interior glass is required.
6. Furniture in the room shall include at a minimum a comfortable chair and small table with bottom rack. Chairs should be upholstered, cushioned, have armrests, high back, and be a regular seating height. Gliders with ottomans are preferred. Coverings on chairs and furniture should be readily cleanable and durable vinyl or similar material.
7. Fixtures shall include a changing table and/or changing countertop, clock, waste receptacle, bulletin board (to provide space to post literature and resources), and at least one electrical duplex outlet next to where the individual will use the pump.
8. Room shall meet standard office level illumination and ventilation requirements.
9. Exterior room signage shall designate room use as "lactation room" and have numbering matching the building standard in which it is located. The international breastfeeding symbol shall be included on the sign. For rooms that are obscured from view when approaching from any direction, a flag sign must be included in addition to the standard room sign.
10. Lactation rooms cannot be a restroom, toilet stall, storage room, or janitor's closet.
11. Rooms should have all required Fire Alarm systems installed including flashing strobe for hearing impaired, when required.

B. Recommendations

1. Lactation rooms should be provided with a sink within the room or be adjacent to a restroom. Ideally, the dedicated sink would be installed in casework to provide the space necessary to clean equipment and containers. If a sink is provided, paper towel and soap dispensers shall also be provided and shall be included on the custodial rotation for refilling.
2. The room should include an under-counter refrigerator for keeping breast milk cold.
3. The room should have additional electrical outlets throughout for greater flexibility in room use/furniture placement.
4. Room finishes should be warm and comfortable.
5. Dimmable LED lighting should be provided allowing personal adjustment.
6. A thermostat, if possible, should be included to allow user control over room temperature.
7. The room should include a mirror, preferably full length.
8. In addition to the required bulletin board, a small white board is recommended.
9. Designer shall verify that fire alarms and other audible or transmitted notifications can be received within the lactation room, when the lactation room door is closed. If not, appropriate features must be added, so that lactation room users receive any notifications.
10. Converted rooms that may have been a restroom previously, should have unused fixtures and grab bars removed.

PART 2 - PRODUCTS - Not Included

PART 3 - EXECUTION - Not Included

END OF SECTION 102001

SECTION 10 28 13 – TOILET ACCESSORIES

PART 1 - GENERAL

1.1 SUMMARY

A. This section addresses the type of accessories which are to be provided or anticipated for all new and remodeled restrooms.

B. Some accessories shall be Owner Furnished, Contractor Installed (OFCI). Their locations, dimensions, and clearance shall be clearly indicated on the plans. These items may include toilet seats, grab bars, shower curtains and hooks, toilet tissue dispensers, shower bath curtain rods, mirrors, medicine cabinets, towel bars and hooks, soap dispensers, paper towel dispensers, shelving, seat cover dispensers, coat hooks, and foot washing stations.

C. Related Sections
1. Division 01 - Accessibility & Universal Design
2. Division 08 - Door Hardware
3. Division 09 - Flooring
4. Division 10 - Signage
5. Division 22 - Plumbing fixtures
6. Appendix - All Gender Restroom Policy

1.2 DESIGN & PERFORMANCE REQUIREMENTS

A. Additional signage should be added to all-user multi-stall restrooms, confirm with signage guidelines.

B. Consider a shelf or countertop at lavatory installations.

C. Dispensers
1. Consultant should identify locations of owner-furnished accessories to allow for proper prep & installation.
   a. For new projects, FPM Custodial Services may provide paper towel, hand soap and toilet tissue dispensers for layout by design team for installation by the Contractor.
   b. PSU uses specific dispensers for paper products. These products may require the installation of vendor-- provided dispensers that are unique to these products. Confirm with the PSU Project Manager.
2. All dispensing units shall be surface mounted. Recessed elements are to be avoided. Stud walls should receive appropriate blocking to accommodate surface mount attachment.
3. Provide at least one paper towel dispenser for every three sinks and install at an ADA accessible height.

D. Provide plumbing fixtures with low flow or low water consumption. Reference building code & LEED guidelines for preferred flow rates.
1. Includes: Toilets, faucets, shower heads, kitchenette faucets.

E. Provide Diaper Changing Stations at main floor restrooms and at multi-stall All Gender Restrooms.

F. Trash receptacles are to be located or at least anticipated in every restroom. Confirm with facilities / janitorial if receptacles should be wall mounted units or stand alone units.

G. Water Heaters
1. All water heater thermostats must be set no higher than 120 degrees.
2. All water heaters shall have at least 1.5 inches of foam insulation.
3. Contractors shall select a water heater with the highest energy factor (EF) and annual fuel utilization efficiency (AFUE) rating.

1.3 SUBMITTALS

A. Shop drawings must include heights and locations of all specialty items and must be reviewed and approved by PSU Project Manager.

B. Provide an Accessories Schedule in the specifications or on the drawings listing each room and the quantity of each type of accessory required as well as who provides what elements and who installs.

PART 2 - PRODUCTS

2.1 DISPENSERS

A. Paper Towels
1. OFCI. Manual, large roll type. Confirm current model with FPM or Project Manager. Manual feed type, typical. MFR: Georgia-Pacific, “Pacific Blue Ultra” manual feed, 1’1/2” core, single roll, Model: 59589.

B. Soap
1. OFCI. Confirm current model with FPM or Project Manager. Manual dispenser, black color, plastic. MFR: Georgia-Pacific, Soap/sanitizer dispenser. Pacific Blue Ultra, Model: 53057.
2. Avoid attaching to mirror.

C. Toilet tissue
1. OFCI. Confirm current model with FPM or Project Manager.
2. At standard stalls, provide jumbo 2-roll (large + small) bottom dispensing type. Wixie or Georgia-Pacific, twin jumbo roll, side mount dispenser. GP: 59210. Wixie: DS-3020.
3. At ADA accessible stalls, provide 2-roll, coreless, side by side, front dispensing type – for use with large capacity rolls. MFR: Georgia-Pacific GP Pro, Compact.
    a. NOTE: This is deemed more accessible to users since it can be mounted below the side grab bars, is fits better into the reach range. Large + small dispensers function poorly when mounted below the grab bar and can not be mounted above the grab bar without interfering with the small vertical grab bar that has recently been required at ADA stalls.

D. Seat covers
1. Specify surface mounted to work with paper dispenser sleaves.
2. Product MFR: Bobrick B-221, GP-Pro “Safe-T-Gard” or approved equal.
3. For use with Waxie seat cover refills.

2.2 DIAPER CHANGING STATIONS

A. Provide surface mount, horizontal orientation (vertical if space restrictions exist) polypropylene case with steel reinforcing.
1. Manufacturer: Koala Kare or approved equal

2.3 GRAB BARS

A. Specify metal grab bars where required for accessibility. Provide Type-304 18-gauge stainless steel, 1-1/4" outside diameter with concealed mounting devices with snap flange covers. Bars should be individual units and not spanning around corners.

B. Surface to be satin brushed finish.

C. Install to provide 1-1/2" clearance between wall and inside face of handrail.

D. Utilize lengths needed to meet ADA grab bar requirements as well as current City of Portland requirements for a 24” vertical grab bar on the side wall.

E. Product MFR: Bobrick B-5806 series

2.4 MIRRORS

A. Shall be 1/4" glass with Type 304 stainless steel angle frame, welded corners and concealed fasteners for theft resistant mounting.
   1. Install a clear protective film over the mirror glass and an aid against scratching & breaking of the glass. Confirm film type.

B. Locate, space, and size mirror to provide adequate free wall space for soap dispensers.

C. Install above sinks and full-length sizes to meet ADA restroom requirements.

D. Manufacturer: Bobrick
   1. Framed Mirror: B-290 Series

2.5 SHARPS DISPOSAL

A. OFCI. PSU shall furnish a sharps / needle disposal container for installation in restrooms.

B. Product: Stainless steel wall mount cabinet, 1.4 Qt. mailback container with factory labels on exterior face.

C. MFR: Stericycle, #NDCSS1

2.6 ELECTRIC HAND DRYERS

A. Where requested, provide electric hand dryers in addition to paper towel dispensers in multi-stall restrooms. Paper towel dispensers are preferred in most areas.

B. Dryers should be automatic on-off with motion sensors to minimize energy use.

C. Product MFR: Electric hand dryer in restrooms, Dyson “Airblade V”, Model HU02 (White or Nickel) Low (120v) or High (240v) voltage. Touch free, with HEPA filter, low sound level (~79 dB). Install with SS backing plate / wall shield.

D. Other MFR as approved.

2.7 RESTROOM ENTRIES

A. Open entrances (without doors) should be considered at higher traffic areas of buildings for increased ease of accessibility to restrooms.

B. Where restroom doors are needed due to limited available space, consider door openers for increased ease of access. Reference Door Hardware section for door opener specification preferences.

C. Restroom Signage: Provide restroom signage with door numbers included on the Restroom Sign, at new or replacement door signs.
   1. For All Gender / Mixed gender, all-user restrooms: Provide signage with “All User” label rather than “All-Gender” text.

D. Where possible, avoid multiple doors in sequence at entries to restrooms.

2.8 RESTROOM FLOORING

A. Preferred flooring is a seamless floor and cove base. Example: Epoxy Quartz Seamless Floor (MFR: Silikal Quartz or Flake systems, or approved equal.)

B. Avoid using ceramic tile on floors.

2.9 RESTROOM PARTITIONS

A. Recycled plastic is a suitable material for toilet partitions due to the durability, anti-graffiti features, reparability and clean-ability of the material. These products use recycled High-Density Polyethylene (HDPE) post-consumer plastic. Depending on the product, the recycled content can vary from 30% to 75%.

B. Steel partitions should be manufactured with recycled materials and content can vary up to 50%.

C. Urinal partitions should match type & brand with toilet partitions.

D. Standard Men's and Women's Restrooms
1. Provide partitions with standard height partitions & hardware options. HDPE materials are preferred. Steel painted partitions may also be considered.

E. All User (All-Gender) Restrooms
1. Signage for these restrooms shall be per the Sign Standards and be labeled with the PSU approved terminology "All-User" rather than all-gender, and include universal symbols (a toilet) and if accessible the universal accessibility symbol (a wheelchair). Other signage may be provided, reference the signage standards and coordinate with the PM.
2. Provide partitions with extra height & "No-Sightline" features and hardware, and as follows:
   a. Trim: Aluminum or stainless steel full height on panel junctions.
   b. Thickness: 1" panels +/-
   c. Hinges: Full height edge mounted stainless steel hinges or full height trim to block sightlines with pivot hinges.
   d. Latch Edge: Shiplap joint at overlapping edges or full height stop trim.
   e. Door Latch: Sliding or rotating latch with Occupancy indicator, ADA latch function.
   f. Door hardware: Provide pull handle on pull sides of door. Provide a coat hook with bumper at accessible height in addition to handle. Provide door stop / bumper where larger ADA doors open up against a wall. Provide coat hooks at standard height at non-ADA stalls.
   g. Mounting: Floor mounted, overhead braced.
   h. Wall attachment: Full height channel.
   i. Panel attachment: Full height channel.
   j. Side panels may be modular or 2-piece for 72" extra-high side panels
   k. Dimensions: 4"-6" to 9" max clear at base, ~72" to 82" high doors & divider panels, 2" - 4" at top of panel to head rail. This allows for a balance between privacy and security. Max height of stalls ~84" to 90".

F. Manufacturers
1. Available toilet partition manufacturers used at other locations on Campus are noted below.
2. Other manufacturers & product lines shall meet the above basic criteria.
   a. Scranton Products
      1) www.Scrantonproducts.com
      2) 801 East Corey Street, Scranton, PA 18505
      3) Products:
      4) "Eclipse Partitions" – Modern style, Standard or Enhanced Privacy Design, Shiplap Edge (no sight) option, HDPE.
      5) "Hiny Hiders Partitions" – Standard or Extra Height options, HDPE.
   b. Hadrian Partitions
      1) www.Hadrian-inc.com
      2) 3602 West Washington St., Suite 200, Phoenix, AZ 85009
      3) Products: "Elite Plus" – Enhanced privacy, powder coated steel partitions.
   c. ASI Accurate Partitions
      1) www.Accuratepartitions.com
      2) 160 Tower Drive, Burr Ridge, IL 60527
      3) Products: "Ultimate Privacy 72" – powder coated steel.
         a) HDPE may have limited availability in tall panel option
         b) Alt: Integrated Privacy, Powder Coated Steel

2.10 WASTE & DISPOSAL RECEPTACLES

A. Sanitary napkin disposal units shall be surface mounted and constructed of stainless steel. MFR: Bobrick B-270 or approved equal

B. Waste receptacles will be provided by Custodial Services as part of FFE and will be free standing units

C. Sharps Disposal Containers

1. OFCI. Confirm current model with FPM or Project Manager. Design team to include in layout of restrooms.
2. Containers to be a stainless steel, wall-mounted, locking cabinet for use with removable 1.4 Qt mailback container.
3. To be typically installed with other restroom accessories or in other areas as specified.
4. Typical dimension: 12”x8”x5”.
5. Manufacturer: Stericycle or approved equal.

2.11 ELECTRIC HAND DRYERS

A. Coordinate preference & installation of electric hand dryers vs paper towel dispensers with Sustainable Design Requirements, Section 018113, SS 2.2.

B. Where installed, provide electric hand dryers with the following features:
1. Auto on-off sensors, or adjustable dry time.
2. Low sound range dBA
3. Overall wattage to reduce power consumption
4. Install a stainless steel backing splash plate below the dryer to protect the wall and allow for proper cleaning of wall surface.
5. MFR: Available products:
   a. Excel Dryer Inc. Xlerator (3.2-3.7 W) & Xlerator Eco (1.4-1.7 W)
   b. Dyson Airblade V,

PART 3 - EXECUTION

3.1 INSTALLATION

A. General
1. Provide framed wall backing for all surface mounted accessories.
2. Clean all surfaces in strict accordance with manufacturer's recommendations after removing temporary labels and protective coatings.
3. Mount all accessories to meet ADA accessibility requirements.
4. Layout all accessories to ensure that surface mount elements do not restrict access to sinks or other fixtures.

END OF SECTION 102813

SECTION 11 12 00 - PARKING CONTROL EQUIPMENT

PART 1 - GENERAL

1.1 SUMMARY

A. Related Sections
1. Div. 26 Electrical
2. Div. 28 Access Control
3. Div. 28 Fire Alarm
4. Div. 32. Parking

1.2 PERFORMANCE AND DESIGN REQUIREMENTS

A. Parking Kiosks
1. New kiosks must be ADA compliant
2. Air conditioning with Energy Star compliance
3. Requires cameras and panic buttons
4. Include data
5. Include eight outlets per attendant work station
6. Doors and window configuration and numbers

PART 2 - PRODUCTS

2.1 EQUIPMENT

A. Awnings
1. Make/Model: Custom
2. Support: Pike Awnings

B. Bird Spikes
1. Manufacturer: Bird-B-Gone. 5” Wide Stainless Steel Bird Spike, Product #: BBG2001-5

C. Fencing
1. Utilize durable chain-link fencing as storage enclosures, or other enclosures within garages.
2. Garbage enclosure fencing within garages.
3. Garage Security fencing
4. Stairwell security screening
5. Perimeter Standalone Fencing
   a. Prefer iron-style (steel) fencing as produce by Ameristar Fence Co. or approve equal.
6. Garage Perimeters
   a. Prefer wire mesh screening over chain link fencing where possible to secure garage perimeters against unwanted access.
7. Barbed wire or razor wire topping cannot be used above fencing per City of Portland requirements. Use curved top fencing on secure areas when needed.

D. Garage Doors
1. Rated for commercial use
2. Make/model: Various.
3. Operated on campus badge access security system (Lenel).
4. Include manual override.
5. Roll up door preferred. Avoid swing type installations. Avoid low clearance garage doors when possible
6. Use heavy duty, 240V motors: heavy duty guides.

E. Gate Arms
1. Make/Model: T2 Parcs Vehicle Gate Arm or approved equal

2.2 TECHNOLOGY

A. Access, Camera, Panic Buttons
   1. Make/Model: Various
   2. Support: Confirm with FPM for current access control contractor for all system coordination. Refer to Section 28.
   3. Consider cameras located at all entrances and exits of parking garages.
   4. Kiosks require cameras and panic buttons.

B. CO2 Monitors
   1. InTec Controls TS-M5160-R CO Monitor wired to control variable speed fans

C. Lighting
   1. Simply LEDs - 50W CEILING FIXTURE, GRANITE, Acrylic Diffuser, 5000K, 70+CRI, Bridgelux BXRA LEDs - Product #CLG-50-C-AP

D. Pay stations
   1. Make/model: T2 Support:T2 systems

E. Radio Repeater
   1. Contact Event Rental Communication

F. Vehicle Count Controller
   1. Make/Model: Parking Logix OpenSpace System Design and Software
   2. Support: T2 systems

PART 3 - EXECUTION - Not Used

END OF SECTION 111200

SECTION 11 90 00 - MISCELLANEOUS EQUIPMENT

PART 1 - GENERAL

1.1 SUMMARY

A. Related Sections
1. Div 10 - Lactation Rooms
2. Appendix - PSU Classroom Standards
3. Appendix - PSU Energy Conservation Guidelines
4. Appendix - PSU Furniture Standards
5. Appendix - PSU Office Standards
6. Appendix - PSU Solid Waste Management Plan

1.2 DESIGN AND PERFORMANCE REQUIREMENTS

A. APPLIANCES DESCRIPTION
1. All appliances to be Energy Star rated. Units should fall within PSU Energy Conservation Guidelines.
2. Appliances should be seismically and structurally secured against tipping and displacement.

B. SPECIALIZED TOOLS
1. For major plumbing remodels that utilizes PEX piping, contractor shall provide an extra set of specialized crimping tool to owner at the conclusion of the project. If there are any additional specialized tools required for PEX piping or their valves, hangers and components contractor shall notify owner.
2. For any project that installs raised flooring, contractor shall provide to owner at the conclusion of project a tile puller or equivalent tool that is approved by flooring manufacturer in order to access below raised floor.
3. For projects installing variable refrigerant flow (VRF) systems and its components that are manufactured in Japan a Japanese Industrial Standard screwdriver shall be provided to owner at the conclusion of the project in order to perform future maintenance on the electrical components within the equipment.

PART 2 - PRODUCTS

2.1 APPLIANCES

A. Dishwashers
1. Units should be pre-approved by PSU Project Manager and facilities engineers that installation is feasible. Dishwashers to be higher quality and energy / water efficient (ie Energy Star rated).

B. Garbage Disposals
1. Units are not allowed to be installed in office sinks, break rooms, kitchenettes, or similar locations.

C. Insta-Hot Water Heaters
1. Insta-hot units installed at break room sinks or similar locations should be InSinkerator brand, instant hot water dispenser.
2. Faucet Model: H-Wave-SS single handle, instant on hot-only water dispenser, high arch swivel spout, auto shut-off, all brass construction, and chrome finish.
3. Tank Model: 2/3 gal. hot water tank to dispense 60 cups of 200F water per hour, with adjustable thermostat.

D. Refrigerators
1. Residential grade, energy efficient to have good Energy Star rating

2.2 AED – Package
1. Where required or requested, provide the following AED equipment.

a. MFR: Philips HeartStart OnSite AED unit
b. Wall mount storage cabinet with labels included.
c. AED Double sided flanged wall sign for mounting above unit.

2.3 LOADING DOCK EQUIPMENT

A. Install loading dock bumpers at typical vehicle contact points. Bumpers should be included in all new construction and updated as needed in any renovations.

B. Removable guardrails should be installed at edges of loading docks. Guards should be installed to meet OSHA standards and be secured at one end against theft.

C. An accessible loading lift should be installed if a ramp is not provided.

D. Permanent safety measures such as forklift wheel stops shall be considered when use of such equipment is anticipated.

2.4 CORRIDOR LOCKERS

A. Lockers should be installed in publicly accessible areas of buildings with heavy academic and classroom use.

B. Preferred lockers: Hadrian “Emperor” series powder coated steel Corridor Lockers for use with hanging padlocks. Min. 10% to have latching, locking, opening and height placement for ADA compliance.

2.5 CLASSROOM & MEETING ROOM EQUIPMENT

A. Projection Screens
1. Coordinate with IT department for placement and appropriate surface type & format for use with proposed projection equipment.
2. Screens to be wall- or ceiling-mounted, manually operated pull-down screens when under 120” diagonal dimension. Electrical operation allowed on larger screens.
3. White powder coated housing is preferred.
4. Manufacturer: Da-Lite “Model C with CSR” unit with controlled screen return for safe, quiet and smooth manual return to housing.

B. Whiteboards & Writable Wall Surfaces
1. Whiteboards shall be used at Classrooms and Conference Rooms; other areas may be considered as needed. (Refer to PSU Classroom Standards)
2. Whiteboards shall be 12’ or less. Coated metal or glass finish.
3. The use of modular partition systems with writable surfaces such as demounted wall surfaces is allowed and must be discussed with PSU Project Manager before specification.
4. Chalkboards shall not be installed.

2.6 TRASH AND RECYCLING CONTAINERS

A. All decisions regarding waste, recycling, and compost containers, placement, and/or design of storage areas for indoor or outdoor waste receptacles require approval by and input from the Waste Management Coordinator in the Campus Sustainability Office.

B. Please refer to the PSU Solid Waste Management Plan for container standards and placement guidelines. Coordinate with PSU-PM and Waste Management Coordinator.

C. Provide approved, free-standing, waste and recycling stations for common areas on each floor. Manufacturer: “Clean River Midpoint.” Common areas include, at a minimum: Break rooms, Kitchens, and Hallways.

D. Provide one waste and recycling station per 200 linear feet of corridor or hallway. Other shared spaces (study lounges, lobbies, etc.) will be evaluated on a case-by-case basis.

E. Contact PSU's Waste Management Coordinator before making any compost container decisions or designing spaces for compost containers. Provide approved, compost containers for departmental break rooms and kitchen areas. Manufacturer: "Simple Human."

F. Alternatively, when space allows, an approved free-standing "Clean River Midpoint" waste station that includes a fourth compartment for compost may be used in these areas.

G. Provide approved recycling "Slim Jim" container for shared copier spaces.

H. With approval by Waste Management Coordinator, exterior waste and recycling containers may be used in hardscaped spaces on a case-by-case basis. Trash containers should always be paired with a recycling container

2.7 VENDING MACHINES

1. Units shall be located near high traffic areas such as elevators, restrooms, main corridors, or break rooms.
2. Units should be installed in a dedicated alcove, when possible, that is fully accessible, not impeding exit pathways, and open at all times.
3. Units should not be installed in an office, behind locked doors, in a storeroom or other enclosed spaces.
4. Dedicated power should be provided to the machines.
5. Units should be seismically braced from tipping.

B. Power shall be provided for machines.

PART 3 - EXECUTION - Not Included

END OF SECTION 119000

SECTION 12 30 00 - CASEWORK

PART 1 - GENERAL

1.1 SUMMARY

A. Key goals when approving and specifying casework are ease of maintenance and cleaning; durability; and use of sustainable products.
   1. Finish products must be easy to maintain and clean. No special cleaning or proprietary maintenance products must be required. It is preferred that installed materials do not need to be waxed or sealed or otherwise treated to maintain a clean look.
   2. Durability is of prime importance. All finish products must be appropriate to the use of the space.
   3. Where possible locally manufactured products should be used.
   4. All materials and finishes should contain the greatest percentage of post-consumer recycled content as possible. Use finishes such as flooring or millwork materials from rapidly renewable sources whenever possible. In addition, specified products should be recyclable at the end of their life.
   5. Paints, coatings, sealant, adhesives, composite wood, carpet and agrifiber products must have low or zero VOC content.
   6. Where possible locally manufactured products should be used.
   7. To the greatest extent possible, avoid using chemicals, adhesives & materials that are included on the “Red List of Chemicals and Materials” as designated by the International Living Building Institute.

1.2 REFERENCES

A. Forest Stewardship Council (FSC) certification, https://us.fsc.org/en-us/certification

B. International Living Future Institute (ILFI), “Red List of Chemicals and Materials,” https://living-future.org/red-list/

C. UL GREENGUARD Certification, https://www.ul.com/resources/ul-greenguard-certification-program

PART 2 - PRODUCTS

2.1 ARCHITECTURAL WOOD CASEWORK

A. Specific institutional quality casework to meet AWI specifications & standards for custom grade or better.

B. Cabinet boxes and frames should be constructed of all plywood construction.

C. Specify FSC certified wood and wood products when possible.

D. Specify low-VOC adhesives in any plywood or other wood composite materials in casework and laminate countertop base materials, and laminate adhesives.

E. Specify low-VOC finishes when possible.

2.2 COUNTERTOP MATERIALS

A. SOLID SURFACES
   1. Solid surface materials are encouraged for use at areas requiring durable, maintainable, heat & chemical resistant surfaces.
   2. Materials include: Plastic resin solid surface materials from manufacturers such as WilsonArt, Corian, and LG can be specified at areas needing a more durable, maintainable, water resistant, cleanable surfacing beyond kitchen or break room kitchenette countertops – other areas may include backsplash surfaces, public service counters, or window sills.
   3. PSU project manager to determine appropriate use.
   4. High durability solid materials including manufactured quartz may be specified at select locations as a substitute for surfaces such as stone, marble, granite, or formed concrete finished surfaces.

B. PLASTIC LAMINATE
1. Laminates may be specified in dry, low use wet areas, low impact vertical surface panels and casework, and as countertops. Sink counters should have top mount / drop-in sinks with laminate edging rather than a wood nosing that may be susceptible to water damage. Laminates may be a lower cost, replaceable wear surface for wall panels in elevators and wall wainscot protection as well as horizontal surfaces. Durable, high abuse core & chemical resistant surfaces can be specified depending on application. FSC and Greengard certification of materials is preferred for laminates and subbase when available. Multiple, textures, colors, patterns, and manufactures are readily available..

C. STAINLESS STEEL
1. Where specifying stainless steel surfaces, specify satin or brushed finish. High polished finishes can stain and require increased maintenance

2.3 WALL PROTECTION – CHAIR RAIL

A. Rigid PVC sheet panels for mounting at the heights of the back of chairs and table edges. Install on non-teaching walls in classrooms that could be impacted by furnishings.
1. MFR: Inpro Architectural Products. Palladium Rub Rails,
2. Textured PVC materials. Colors as selected by PM or Architect.
3. .060" thickness
4. Inpro Palladium Rub Rails
5. Size: Heights 12” typ. x lengths needed or in rolls.

PART 3 - EXECUTION

3.1 INSTALLATION

A. Metal surfaces, corners, and edges
1. Metal surfaces, corners, and edges should be deburred, rounded, or if no other means existed, protected with smooth edging.

END OF SECTION 123000

SECTION 12 46 19 - CLOCKS

PART 1 - GENERAL

1.1 SUMMARY

A. This section addresses the type of clocks which are to be provided or anticipated for interior spaces.

1.2 DESIGN & PERFORMANCE REQUIREMENTS

A. Design:
   1. Wireless, analog with molded plastic case.

B. Location:
   1. Install in all general public spaces
   2. Public conference rooms, student lounges, libraries, recreation centers, etc.
   3. Classrooms.

PART 2 - PRODUCTS

2.1 CLOCK TYPE

A. Features
   1. Synchronized clock systems to work with PSU wireless network, i.e. SiteSync IQ Wireless Clock System.

B. Time Sync
   1. Include automatic daylight savings time adjustment.

C. Power
   1. Battery operated preferred; i.e. Lithium batteries with ~5 year life.

D. Color Scheme
   1. Black with red second hand, with option for PSU logo on surface of white background.

E. Mounting
   1. Wall, surface mount. Alt. Mounting: Ceiling mounted, double sided where needed, i.e. Corridors and linear rooms.

F. Size
   1. 10”, 12”, or 15” depending on viewing distance in room.

G. Case
   1. Heavy-duty steel or molded plastic.

H. Clock crystal
   1. Glass face on steel case; polycarbonate safety crystal on molded plastic case.

I. Manufacturers
   1. Basis of Design - American Time & Signal, or approved equal

PART 3 - EXECUTION - Not Included

END OF SECTION 124619

SECTION 13 12 13 - EXTERIOR FOUNTAINS

PART 1 - GENERAL

1.1 SUMMARY

A. Installation of new fountains on campus is not allowed.

1.2 DESIGN & PERFORMANCE REQUIREMENTS

A. Design:
1. If fountains are approved, product and materials shall be as specified by architect or project manager in consultation with PSU Facilities and Property Management (FPM) staff.
2. Pumping system for fountains must be solar operated.
3. A separate waterproofing plan with details must be provided and approved by PSU Project Manager

PART 2 - PRODUCTS - Not Used

PART 3 - EXECUTION - Not Used

END OF SECTION 131213

SECTION 14 00 00 - CONVEYING EQUIPMENT

PART 1 - GENERAL

1.1 DESIGN & PERFORMANCE REQUIREMENTS

A. For new construction, provide traffic analysis showing projected capacity and elevator speed requirements.

B. Traction elevators shall be used for all lifts.

C. Hydraulic elevators are discouraged and would only be considered in special circumstances and with PSU PM approval.

D. Provide a separate, dedicated temperature-controlled machine room for all elevator equipment, controllers and related electrical disconnects. No “Machine-Room-Less” (MRL) elevator systems. Acoustical treatment for elevator machine rooms shall be provided as necessary to be compatible to the surrounding building usages.

E. No jamb mounted controllers.

F. For buildings with two or more elevators, one shall be sized and outfitted as a dual-purpose lift for use with both passengers & freight.

G. All elevator cab lighting shall be LED and provide a minimum of 10 foot-candles of lighting.

H. Pathways to elevator machine rooms shall have adequate lighting in emergency situations.

PART 2 - PRODUCTS

2.1 NON-PROPRIETARY EQUIPMENT

A. All elevators to be composed of non-proprietary equipment. Examples of non-proprietary manufacturers include:
1. Elevator Controllers: MCE & EC
2. Elevator Machinery: Hollister-Whitney
3. T-Rail preferred.

2.2 PROPRIETARY MANUFACTURERS

A. Schindler, Kone,ThyssenKrupp & Otis may be used when approved by PSU PM

2.3 HALL FIXTURES AND CALL BUTTONS

A. Preferred manufacturer: Innovation Industries, Inc “Bruiser Elevator Accessories”
1. Innovation 500 series keys shall be used.
2. Provide discrete wiring rather than serial link.

B. WALL FINISHES
1. Wall finishes shall be selected for maintenance and cleanability. Avoid surfaces that scratch easily

PART 3 - EXECUTION

3.1 INSTALLATION

A. Provide stops at all floors with substantial mechanical equipment including rooftops and subbasements.

B. Provide a dedicated temperature-controlled machine room for all elevators to house elevator equipment, controller, and electrical disconnects.

C. Provide a shunt trip breaker to protect elevator equipment in the event of sprinkler system activation.

D. Provide Phase 1 and Phase 2 fire alarm recall functionality and testing for every new elevator.

E. Provide cabling with traveler to support future access control within each cab. Reference Section 28.

F. For card reader cabling in new elevator installations and renovations, the traveler cable should be shielded, two (2) twisted pairs no smaller than 22 AWG conductors (four conductors in total) in a plenum-rated outer jacket. AWG should be determined based on ensuring voltage drop from wiring length does not reduce voltage at the reader below 5V. Manufacturer should be from the approved list from Div 28.

G. New and renovated elevators shall not have the “nudging” feature

H. Provide cartop safety rail in elevator

I. When there is no emergency power in building, elevators should provide battery lowering device for power outages.

J. All proprietary tools to be left on-site

END OF SECTION 140000

SECTION 21 00 00 - FIRE SUPPRESSION

PART 1 - GENERAL

1.1 SUMMARY

A. Compliance with the design standards listed in this section is required unless otherwise noted by the PSU Project Manager.

B. All work to conform to applicable NFPA and Oregon Fire Code for a complete code compliant installation.

C. Fire sprinkler systems must be installed on major remodels, new construction, or per code.

D. Related Sections
1. Div. 22 - Plumbing
2. Div. 26 - Electrical

1.2 DESIGN & PERFORMANCE REQUIREMENTS

A. Ensure there is sufficient access to fire suppression systems and equipment for repair, maintenance, or replacement. Ensure access is considered in design and implemented in construction.

B. PSU prefers non-proprietary equipment for fire suppression systems.

C. Fire systems shall be tied into PSU Building Automation System (BAS) on systems when economically feasible.

D. All construction activities shall meet PSU Environmental Health & Safety (EH&S) Hot Work Program.

E. Observe all code and regulations for Fire Watch procedures including notifications to the Fire Marshal.

F. System shall be drainable; drains shall be equipped with a locking mechanism and labeled. When feasible, locate drain ports to the exterior of the building. When draining system inside the building, all drains shall be able to accept the demands of fire-systems testing.

G. Test heads for wet, dry, and combination systems shall be located per code. Provide means to test, drain, and monitor for flow. Provide locking plate, lock and keys.

H. Test headers and stand pipes shall be installed and located per code. Test headers need to be monitored for flow.

I. When designing additions to existing fire protection systems, verify extent of existing Sprinkler System including above ceilings and in walls.

J. If required by Authority Having Jurisdiction (AHJ), existing fire hose cabinets shall be removed.

K. Fire extinguishers to be installed as required by code and as requested by PSU Project Manager & PSU Fire Prevention Manager.
1. Fire Extinguisher Cabinets: In public facing locations and in active corridors, a wall mounted recessed or semi-recessed cabinet should be installed.
2. Install wall sign above fire extinguisher to indicate location when viewed from down a hallway or corridor. I.e. Flag or triangular wall sign.

L. Fire Pump Room
1. A dedicated fire pump room is preferred.
2. The room shall be restricted to authorized personal only
3. The room shall be kept between 40 F – 104 F.
4. All lighting serving the room shall be on emergency power
5. The room shall be rated for 2-hour protection
6. Suction piping shall have city water bypass.
7. Identification via signage is require on door exterior.

8. Floor drain shall be provided in fire pump room. Drain piping shall not cross the path of travel. Slope floor to drain. As needed a sump and sump pump shall be installed to drain water properly.
9. Heater and thermostat required.

1.3 COORDINATION

A. Notify and obtain permit from Fire Marshal for any fire alarm/sprinkler installation, alteration, or removal.

B. PSU's insurance carrier is to be consulted on all major and/or high-risk fire system modifications.

C. For modifications to the system or to put systems into "Test", consult with PSU Fire Prevention Coordinator to ensure Insurance Carrier Impairment Permit is not required.

D. Contact AHJ for heat tracing and insulation requirements for fire protection piping. Refer to Section 22 and Section 26 for additional requirements.

1.4 SUBMITTALS

A. At the end of the project, submit to PSU all CAD files and calculations (ex. Battery, current draw, etc.).

B. Provide all equipment start up reports, testing reports, and approvals from AHJ

C. Control Procedures
1. Provide written energy control procedures (provisions for lock-out tag-out) for any new equipment installation.
2. Provide written energy control procedures (provisions for lock-out tag-out) for any new equipment installation.
3. Modifications to existing equipment require written revisions to any written electrical control procedures.

1.5 QUALITY CONTROL

A. When feasible, fire suppression system systems shall be commissioned by 3rd party after installation on systems valued over $100,000.

PART 2 - PRODUCTS

2.1 BACKFLOW PREVENTER

A. Provide back flow prevention that is UL listed and approved by PSU Insurance Provider. Provide butterfly valves on inlet and outlet with Wilkins/Zurn 350ASTDAR, or approved equal, backflow with Victaulic on top for monitoring switch and strainer on inlet.

2.2 FLOW SWITCHES

A. Provide necessary flow switches PSU Project manager and PSU Fire Prevention Manager to approve locations

2.3 FIRE PUMPS

A. Manufacturers: Peerless (Fire Pump); Firetrol (Fire Pump Controller's); Grundfos (Jockey Pump); Metron; or as approved by PSU Project Manager.

B. Requirements
1. Fire pumps must have automatic weekly exercise capability.
2. Fire pumps must have data storage capability at panel and soft start on the motor.
3. Provide 100% shut off valves on both ends of test loops.
4. Provide pressure gauges on suction and discharge of pump.

5. New fire pumps shall be installed on inertia base.
6. Provide seismic bracing where applicable.
7. Fire pump and jockey pump shall be wired into emergency generator with a dedicated transfer switch when applicable.
8. Fire pump shall be tested in accordance with NFPA and AHJ.
9. Fire Pump and panel shall be tied into building's main fire panel. Refer to section 28 for additional information.
10. All power and controls associated with fire pump shall be a 2-hour rated assembly approved by AHJ.
11. Raceway for conductors shall be as approved by PSU Project Manager.
12. Provide written energization, de-energization and testing electrical control procedures (provisions for lock-out tag-out) for any new equipment installation(s). Modifications to existing equipment require revisions to any written electrical control procedures.

2.4 PIPING

A. Black steel pipe is preferred. Piping shall be 2-inch in diameter or smaller, or piping exposed at 8' or less above finished floor shall be schedule 40. Piping 2-1/2 inch in diameter or larger shall be schedule 10. Provide factory applied anti-microbial coating.

B. Threaded, flanged, welded, and mechanical fittings are approved.

C. Piping shall be seismically braced per code and/or by the structural engineer recommendations.

2.5 PRE-ACTION SYSTEMS

A. Manufacturer: Potter, or as approved by PSU Project Manager.

B. Dry systems shall be used when system is exposed to freezing conditions or in sensitive areas (e.g. server rooms, research labs, etc.).

C. Compressor shall be heavy duty or commercial rated. Compressor will be sized to fill the appropriate system within half an hour. Provide an auxiliary tank. Systems must have auto-bleed.

2.6 RAIN WATER COLLECTION TANKS FOR FIRE SUPPRESSION SYSTEMS

A. Tank must be located in basement.

B. Provide chemically treatment and/or filtering system for rainwater entering tank.

C. The filling of the tank shall be automatic with redundant shut-offs and supplies.

D. Provide low/high level alarms and low-low/high-high level alarms.

E. Provide secondary containment and leak detection system tied into BAS.

F. Provide information to Section 22 designer so that a room drain is provided that can handle the tank capacity.

G. When required, provide an OSHA-approved ladder system in order to access tank

2.7 SPRINKLER HEADS

A. Minimum 20 pounds water pressure to be maintained at top floor in sprinkler heads.

B. All new heads shall be UL listed, quick-response type, with chrome finish or easily identifiable and recessed.

C. When an existing space is being remodeled sprinkler heads older than 20 years must be considered for replacement or as required by AHJ.

D. If necessary install new heads and adjust locations for new construction.

E. Recessed sprinkler heads shall be used in gymnasiums, residence units, public corridors, and in any place where the ceiling is exposed to impact.

F. Sprinkler heads shall be caged in mechanical and electrical rooms, janitorial closets, where installed lower than 7 feet above floor and/or similar vulnerable spaces. For projects that include significant additions or maintenance on fire sprinkler systems the contractor shall provide a sprinkler box (if not already existing) in main riser room that contains spare sprinkler heads that match the system requirements. Amounts and types shall be based on the size and scope of the project

2.8 STAND PIPES

A. Fire suppression hose valves shall be located on floor level landings of stairwells. Provide additional drains as required to achieve proper drainage.

B. For roof hydrant connections, provide control valve that is freeze proof and connected to building alarm system.

C. Fire department connections shall be located to ensure proper clearance from walls, free of obstructions, to allow full swing of fire department wrench handle. Provide method for pipe draining.

2.9 TEST HEADERS / FIRE DEPARTMENT CONNECTIONS

A. When planning for system testing, take precautions to avoid creation of exposed low points in the system or areas which may later freeze creating hazards.

B. Appropriate clearances must be maintained (e.g. clear path to test header, circulation space, not creating trip hazard, etc.) in accordance with relevant regulations.

C. Coordinate placement of test headers with the Fire Department. Test headers must have proper clearance around the header, and avoid being placed in front of landscaping

2.10 VALVES

A. Auto-Fill Valves must have:
1. Mechanical and electrical redundancies to shut off systems when needed;
2. The ability to manually shut off and manually fill;
3. Bypass installed on the auto-fill assembly;
4. Alarm/monitoring via PSU Building Automation System

B. Shut-Off Valve
1. Provide a shut off valve on every floor with pressure gauges. Provide tamper proof devices.

PART 3 - EXECUTION

3.1 INSTALLATION

A. Fire Suppression Materials and Methods
1. All piping shall be cleaned, capped, and flushed prior to install completion.
2. Disposal of hazardous materials from manufacturing and on-site fabrication shall comply with regulations for disposal of such material.
3. When extending an existing fire protection system or performing construction near an existing fire protection system, take measures necessary to protect existing system during construction.

B. Pre-Action Systems
1. Install pre-action control panel located within sight of the pre-action valve. Panel must be accessible and have the code required clearances.

C. Rain Water Collection Tanks for Fire Suppression Systems
1. Provide adequate access and clearance for cleaning.

2. All tank penetrations shall be sealed water tight.
3. Tank shall be lined. Upon completion of curing time of liner, tank shall be filled and tested for seven consecutive calendar days demonstrating compliance with NFPA 22

END OF SECTION 210000

SECTION 22 00 00 - COMMON WORK RESULTS FOR PLUMBING

PART 1 - GENERAL

1.1 REFERENCES

A. Standards references in this division include:
1. ANSI/ASME A13.1 - Pipe Markers
2. ANSI Z358.1-2014: Emergency Eyewash & Shower Standard
3. City of Portland - Title 25 Plumbing Regulations
4. Environmental Protection Agency
   a. 3Ts for Reducing Drinking Water in Schools and Childcare Facilities
   b. EnergyStar program
   c. WaterSense program
5. NSF/ANSI/CAN 61 - Drinking Water System Components
6. Oregon Plumbing Specialty Code
   a. 313.3 - Suspended Piping
   b. Table 707.1 - Cleanouts
7. Uniform Plumbing Code, Appendix A “Water Supply Fixture Units (WSFU) and Minimum Branch Pipe Sizes” table
8. US Green Building Council (USGBC) LEED

1.2 DESIGN AND PERFORMANCE REQUIREMENTS

A. General
1. Ensure as much as possible adequate clearance for ease of accessibility to systems/equipment for repair, maintenance or replacement.
2. All items in this section shall comply with all city of Portland applicable plumbing codes and industry standards, unless otherwise noted.
3. All devices installed in the potable water system of building to be lead free and meet NSF Standard 61 and EPA's "3Ts for Reducing Drinking Water in Schools" Remediation requirements. Replacement fixtures shall meet Section 9 of the NSF Standard and be labeled per NSF requirements.
4. All new equipment and fixtures shall be as water efficient as possible, be WaterSense certified where applicable, and should assist in achieving Water Efficiency credits in the LEED rating system.

PART 2 - PRODUCTS – Not Used

PART 3 - EXECUTION – Not Used

END OF SECTION 220000

SECTION 22 10 00 - PLUMBING PIPING

PART 1 - GENERAL

1.1 DESIGN AND PERFORMANCE REQUIREMENTS

A. Plumbing Piping System
1. Unless approved by building official routing new piping over electrical equipment is not allowed.
2. At a minimum one hose bib shall be provided on building roof tops for maintenance purposes. The consultant design team and PSU project manager shall determine if more than one is needed based on the size, amount/type of equipment and physical complexity of the roof.
3. Access Panels
   a. Valves 1" in size and less - located no deeper than 18 inches from panel, panel size should not be less than 8x8.
   b. Valves 1-1/4" and larger - located no deeper than 14 inches from panel, panel size should not be less than 12x12.

PART 2 - PRODUCTS

2.1 EQUIPMENT

A. Meters, Devices and Gauges for Plumbing Systems
1. Manufacturers
   a. Gauges: Precision Plumbing Products or as approved by PSU Project Manager.
   b. Digital Domestic Water Meters: Cadillac CMAG or as approved by PSU Project Manager.
   c. Turbine Domestic Water Meter: Carlon (lead free) or as approved by PSU Project Manager.

B. General Duty Valves
1. Manufacturer: Apollo, Zwick, or as approved by PSU Project Manager. Full port valves, Nibco, ball valves are prefer

C. Balancing Valves
1. Manufacturer: Bell & Gossett, CircuitSolver, and Griswold or as approved by PSU Project Manager.

D. Back Flow Prevention/Check Valves
1. Manufacturers
   a. For line sizes less than or equal to 2”, use zurn wilkins 950 XL2or as approved by PSU Project Manager.
   b. For line sizes greater than 2”, use Wilkins with Victaulic opening to check valve or as approved by PSU Project Manager.
   c. Zurn-Wilkins 975XL2 reduced pressure principle backflow assembly - ¼” up to ½”
   d. Zurn-Wilkins 975XL2 reduced pressure principle assembly - ¾” up to 2”
   e. Zurn-Wilkins 375AST reduced pressure principle assembly - 2½” up to 10”
   f. Zurn-Wilkins 350ASTDA double check detector assembly - 2½” up to 10”
   g.

E. Insulation
1. Manufacturer: Copper/Steel Piping, Fiber Lock; Polypipe, Armaflex

F. Plumbing Piping
1. Type L Copper Polyethylene pipe: Uponor ProPex (pipe diameter sizes 1” and less)
2. Flexible gas piping: WARDFLEX or TracPipe
3. Below grade waste piping: SCH. 80 SOLID CORE ABS or CAST-IRON SCHEDULE 80 PIPING

G. Floor Drains
1. Floor Drains : Zurn or as approved by PSU Project Manager.
2. Trap Primers: PPP P2500 or P1500 Trap primer or as approved by the PSU project manager.

H. Laboratory Piping Systems
1. Emergency Showers: HAWS or as approved by PSU Project Manager.
2. Emergency Eyewash:
a. Loose hose, wall mount: Guardian, Bradley drench hose eyewash station.
b. Counter Mount: Adjacent to sink.
3. Showers & Eyewash Stations: Units shall meet ANSI Z358.1 & OR-OSHA for location, temp., etc.
4. Provide water tempering device and backflow vacuum breaker backflow preventer options.
5. Chemical Waste Piping & Fittings: ORION or as approved by PSU Project Manager.
a. Chemical Waste Piping: Orion Blueline FRPP Schedule 80, Polypropylene or equal.
6. No hub acid waste joining system is preferred over fuse seal joints.

PART 3 - EXECUTION

3.1 INSTALLATION

A. Expansion Fitting and Loops
1. For copper, steel, and gas piping, stainless steel braided hose shall be used for flexible pipe connections.
2. Install expansion joints in accordance with EJMA (Expansion Joint Manufacturer's Association) Standards.
3. Hard piping prior to shall be supported appropriately so to minimizes stress on flexible joints/connectors.
4. Install guides on piping adjoining expansion fittings and loops. Attach guides to pipe and secure to building structure.
5. Install anchors at locations to prevent stresses from exceeding those permitted by ASME B31.9 and to prevent transfer of loading and stresses to connected equipment.
6. Clean field welds and abraded areas of shop paint. Paint exposed areas immediately after erecting hangers and supports. Use same materials as used for shop painting.

B. Hangers and Supports for Plumbing Piping Equipment
1. Loop hangers are preferred with the exception of no hub pipe. For no hub pipe, clevis hangers are preferred.
2. Metal insulation shield shall be installed with hangers in order to protect insulation.
3. Hang all piping in accordance with Oregon Plumbing Specialty Code 313.3 as minimum standard.
4. Provide steel backing, including pre-manufactured carriers, in walls to support fixtures and piping hung from steel stud walls.
5. Do not support piping from other piping.
6. Group parallel runs of horizontal piping shall be supported together on trapeze-type hangers.
7. When dissimilar metals come in contact with each other, select materials which are compatible to prevent electrolysis, or provide means of isolation between the materials.
8. Provide prefabricated pipe curb assemblies for roof membrane and insulation penetrations related to equipment.
9. Piping above roof to be supported with freestanding roof pipe supports.
10. Install escutcheon plates around horizontal and vertical piping at visible locations through walls, partitions, floors, or ceilings.
11. Wall and floor sleeves below grade or subject to moisture shall have neoprene gasket links bolted together around an interior sleeve forming a watertight seal.
12. Wall and floor sleeves shall be UL rated assemblies when needing to maintain fire rating of pipe penetrations through fire-rated assemblies.
13. Provide riser clamps at floor penetrations. Install foam pad between clamp and piping. Floor penetrations must be sleeved and sleeve must extend a minimum of 1" above finished floor.
14. No zip ties shall be used to secure Pex-A piping.
15. Pex piping shall be protected from UV light.

C. Meters, Devices and Gauges for Plumbing Systems
1. Place gauges at inlet & outlet in each piece of equipment (boiler, expansion tank, storage tank, trerice gauges, etc.).
2. Positive displacement (liquid) meters and gauges are preferred.
3. For pressure reducing valves, provide manual temperature, and pressure gauges directly downstream and upstream of valve.
4. Digital meter to be installed on incoming water main from City or PSU domestic water loop. Turbine meters are considered for City make up and process water metering (e.g. cooling towers).

5. Shut-off valves are required on all gauges.
6. Provide instruments with scale ranges selected according to service with largest appropriate scale.
7. Provide water hammer arrester when applicable and per the recommendations of Plumbing and Drainage Institute PDI-WH201.
8. Hammer arrester shall be installed with ball valve for maintenance purpose.
9. Install gauges and meters in locations where they are easily read from normal operating level. Install vertical to 45 degrees off vertical.
10. Where adequate space is not available, use meters specifically designed for short pipe lengths.
11. Install meters per manufacturer's instruction. Provide recommended upstream and downstream strait pipe length for accurate reading.
12. Locate test plugs adjacent to thermometers and thermometer sockets, adjacent to pressure gauges and pressure gauge taps, adjacent to control device sockets, or where indicated.
13. Install trap primers per code. Tie into DDC controls if feasible. Ensure power supply breaker and location is provided at manifold/controller.

D. General Duty Valves
1. For isolation, ball valves are preferred over butterfly valves. No gate valves are approved for isolation.
2. Mechanical domestic water mixing valves are preferred over digital.
   a. Provide Symmons or approved equal.
   b. Watts and Leonard mixing valve manufactures are not allowed.
3. Use Outside Stem & Yoke (OSY) shut-off valves for pipes 4" and larger.
4. Avoid use of pressure regulating valves (PRV), for domestic applications boost water to upper floors and have city water pressure serve lower floors. If PRV's are needed ensure that inlet, outlet, and bypass isolation valves are provided.
5. When possible, hot, cold, hot water return isolation valves for every bathroom group, provide one set of isolation valves in order to completely isolate all fixtures per space (e.g. classroom, dormitory, bathroom, etc.).
6. Install valves where required for proper operation of piping and equipment, including valves in branch lines where necessary to isolate sections of piping.
7. Locate valves so as to be accessible; install with chain operators as required. Extend chains to 5-feet above floor and hook to clips to clear aisle passage.
8. Provide hand wheels fastened to valve stem for valves other than quarter-turn. Provide lever handle for quarter-turn valves 6-inches and smaller.
9. Provide quarter-turn freeze-proof hydrants at various locations on exterior building walls for landscaping uses.
10. Manufacturer's name, vandal proof and pressure rating to be clearly marked on valve body.

E. Balancing Valves
1. Balancing valves shall be installed on all pumping systems downstream of pump. This applies only when a VFD is not installed.
2. Balancing valves shall be installed on all branch loops that serve fixtures/equipment (e.g. hot water recirculation loops, hot water heating loops, etc.).
3. Install balancing valves with flow in the direction of the arrow on the valve body. Allow enough distance away from any fitting as recommended by manufacturer.

F. Cleanouts
1. Provide cleanouts at every kitchen sink and urinals per Oregon Plumbing 2021 Specialty Code at the base of all waste and drain stacks.
2. Provide raised head brass cleanout plug for no hub piping.
3. Provide ABS cleanout when installing ABS piping; do not provide brass.
4. Cleanout must be accessible.
   a. Install removable floor and wall covers or access panel for concealed piping.
   b. Select type to match adjacent building finish.
   c. Access panels shall not be keyed.
5. Cleanout sizes shall be a minimum size as per Oregon Plumbing Specialty Code Table 707.1 and be included on all sanitary, storm and specialty drainage systems.

G. Back Flow Prevention/Check Valves
1. For main building backflow assembly, install bypass one pipe size smaller than main. Bypass shall be equipped with backflow assembly that as listed in Part 2.
2. For main building back flow assemblies provide isolation valve just downstream of the assembly to facilitate a future replacement.
3. For Fire Suppression systems only install Y strainer at main building backflow device and ensure clearances.

4. Avoid locating valve(s) in vaults or confined spaces.
5. For 2” and larger, provide OS&Y or butterfly shut off valves with tamper switches on each side of valve.
    a. This applies to Fire Suppression Systems only.
6. Spring check valves, Wafer check valves, and Lift check valves are acceptable for low hazard applications (e.g. pump discharge).
7. Vacuum breakers are acceptable for lab sinks, hose bibs and low hazard applications.
8. Where practical, locate assembly in the same room as equipment being protected.
9. Chemical/soap dispensers are to be treated as a high health hazard and are not preferred and must be approved by project manager. If installed for janitorial closets or kitchen they must have a Reduced Pressure Principle Device backflow device and emergency eye wash station.
10. Seek review and approval of exact location and type of valve with Authority Having Jurisdiction (AHJ) prior to purchase and installation. Provide all required testing after installation per AHJ requirements and provide appropriate documentation to PSU.

H. Electrical Heat Tracing
1. Install electrical heating tracing system when piping is exposed to freezing conditions.
2. Piping shall be labeled accordingly. Label piping and nearest junction box indicating circuit and panel locations.
3. Plumbing designer to provide projected load information contractor to coordinate with design

I. Vibration and Seismic Control for Plumbing
1. Consider installing vibration control when equipment is above, below, or near noise sensitive area.
2. Steel equipment bases shall have the lowest possible mounting height with not less than 1” clearance above floor.
3. Set floor-mounted equipment with steel base rails on 4” high concrete housekeeping pads. Extend pad 6” beyond footprint of equipment in each direction.
4. Provide mounts for equipment installed outdoors for wind loads of 30 lbs. psf applied to any exposed surface of isolated equipment.
5. Do not install equipment or pipe that makes rigid contact with building slab, beams, studs, walls, etc.
6. Support water and gas piping, connected to rotating equipment within equipment rooms, on spring and neoprene hangers.
7. Fill pump inertia bases with concrete. Support heels of suction and discharge elbows from base.

J. Identification for Plumbing Piping
1. Comply with ANSI A13.1 for lettering size, length of color field, colors, and viewing angles of identification devices.
2. Provide stickers for identification rather than stenciling. Mechanic fastening is also acceptable.
3. Include flow/supply direction for both air and water systems.
4. Provide a valve schedule as part of a submittal package. Upon approval from owner, valve shall be framed and installed appropriately in building mechanical spaces by completion of project. Valves shall be tagged in the field per schedule.
5. Provide ceiling tile labels for Plumbing equipment (labeled orange) and plumbing valves (labeled Green). Labels shall be machine generated, with adhesive backed with black letters and clear tape.
6. Coordinate with PSU facility maintenance personnel to ensure consistency with the existing piping identification system.
7. Tag balancing valves with GPM or CFM and in as-built drawings.
8. Identify plumbing equipment and control panels with plastic nameplates riveted to equipment body.
9. If in a mechanical/electrical room or non-public space provide stenciled signs on each access door and housing, indicating purpose of access.

K. Insulation
1. Do not apply insulation until pressure testing, heat tracing, and general inspections have been completed and approved:
2. Insulation shall be continuous through walls, floors and partitions except where otherwise noted.
3. For piping and equipment, install insulation over clean, dry surfaces with adjoining sections firmly butted together and covering surfaces. Repair all voids and tears. Lap seal insulation with water proof adhesive. Do not use staples or other methods of attachment which may penetrate vapor barrier. Provide blankets over valves or components that require access.
4. For ADA lavatories/sinks provide insulation kit.
5. For piping that is exposed to weather, cover insulation with aluminum or stainless steel jacket. Seal water tight jacket and provide heat tracing where piping is exposed to freezing.
6. Provide full size diameter hangers and shields (18 gauge minimum).

7. For roof and/or overflow Drains above grade, cover horizontal storm drains and overflow drain piping with sectional pipe covering. Cover underside of drain body with insulation, attached with adhesive and supported by structure with strapping anchor.
8. Pex piping shall be protected from UV light.
9.

L. Plumbing Piping
1. For all applications, copper piping shall be Type L minimum and shall be soldered, brazed or pressed. The use of Uponor ProPexis allows for piping 1” or less. The fitting manufacturer shall match the piping manufacturer.
2. The use of WIRSBO is allowed for piping 1” or less. The fitting manufacturer shall match the piping manufacturer.
3. Gas piping shall be carbon steel schedule 40. Flexible piping is acceptable for smaller diameter applications of 1” or less.
4. Install pipes and pipe fittings in accordance with manufacturer installation standards and as per local, state or regional plumbing and mechanical codes.
5. Locate piping runs as indicated, vertically and horizontally insulated (pitched to drain). Avoid diagonal runs whenever possible. Allow space for insulation and jackets.
6. Whenever possible in finished and occupied spaces, conceal piping from view.
7. Do not run piping through or above transformer vaults, telephone, elevator, electrical or electronic equipment spaces or enclosures.
8. Sleeves are required through all penetrations with fire caulking. Provide nickel or chrome finished escutcheon rings as specified in order to completely cover pipe penetrations.
9. Provide vents and drains for piping, coils, and equipment/vessels which contain water. Provide isolation valves. Provide hose connections and caps on drain lines and on low point drains.
10. Piping connections to equipment shall be made up with unions. Keep pipe openings closed by means of plugs or caps to prevent entrance of foreign matter. Cap all abandoned pipes if they are unable to be removed completely.
11. Keep pipe openings closed by means of plugs or caps to prevent entrance of foreign matter. Remove all abandoned pipes.
12. Provide flanges for steel and copper piping at valves and equipment, unless specified otherwise.
13. In order to prevent electrolysis, provide dielectric unions/flanges with high temperature gaskets as required. Avoid contact with dissimilar metals, including contact with Architectural framing. Provide rubber pads in order to isolate piping from floor penetrations, hangers, clamps, and other potential sources of electrolysis. No ABS through fire wall penetrations above 3 floors. Verify code requirements.
14. For sanitary and storm sewer
    a. Use cast iron, ABS, or as approved by PSU Project Manager. Fittings to be no hub, use 4-band fittings to code (FMH).
    b. Below Grade or covered ABS piping shall be equipped with tracer wires.
    c. Piping shall be graded per drawings. Extend piping to discharge.
    d. For indirect waste, maintain minimum air gap and provide traps as required.
15. Backwater Valves
    a. For residential applications valve shall be ABS.
    b. Provide access two times the lid size.
    c. Label cleanouts as per the Oregon Plumbing Specialty Code.
16. Pressure-test all piping per code or per engineer’s recommendations.
    a. Testing shall be witnessed by PSU Project Manager of PSU facility maintenance staff whenever possible.
    b. Provide report to PSU and architect.
17. Sterilization of domestic water system
    a. Upon completion of tests and necessary replacements, thoroughly flush and disinfect domestic water piping per method outlined by engineer.
    b. Provide final certification and reports to owner.
18. For major remodels, prior to turn over all waste piping shall be snaked/unclogged by applicable contractor in order to remove sediment that hardens over time due to non-use.

M. Floor Drains
1. Install drains to suit floor finish. Arrange for flooring to be sloped to floor drain or sink, including restrooms and labs. P-traps shall match material of piping and be provided with a trap primer assembly. Heat trace and insulate p-traps exposed to freezing conditions.
2. Floor drains are required in restrooms, janitor’s closets, near safety showers, commercial kitchens, laundry facilities, mechanical rooms, main electrical rooms (if sprinkled) and any spaces stated in the Oregon Specialty Plumbing Code. Body of drain shall be cast iron and epoxy coated, plastic may be considered for retrofit applications.

3. Floor drain(s) in laboratories should be located wherever a water source is present, especially an emergency fixture.
4. Strainer shall be stainless steel, brass or cast iron. Plastic will not be accepted.
5. Floor drains shall be equipped with trap primer per code if drain is rarely active.
6. Drains in parking structure shall be manufactured for this application. Strainer shall be selected to avoid debris build-up and tripping hazard.
7. Area drains in parking structure shall be of steel grate style.
8. All drainage from parking structure shall be connected to sanitary storm system or other, per the direction of the City of Portland.
9. All floor drains shall be vented.
10. Design and provide roof drains per City of Portland's Plumbing code. All electrical vaults shall have drains or be equipped with a sump. Consult with PSU CPC during design phase to determine direction.
11. Provide overflow requirements per the City of Portland Plumbing code.
12. Provide collar and dome for all roof top drains.
13. Roof drains shall be cast iron body and epoxy coated bronze.
14. All drainage from roof shall be connected to sanitary storm system or other, per the direction of the City of Portland

N. Laboratory Piping Systems
1. Domestic Potable and Non-Potable, Hot and Re-Circulation Water
   a. Provide polyethylene pipe or copper tubing
2. Laboratory Natural Gas
   a. Schedule 40 and 80 black or hot dipped zinc coated galvanized steel.
   b. Provide welding and seamless pipe.
   c. Piping installed in plenums or shafts shall have welded joints.
3. Laboratory Gas Piping
   a. Anaerobic Oxygen, Nitrogen, Carbon Dioxide, Compressed Air, and Vacuum shall be type "K" hard drawn seamless copper or stainless-steel piping.
   b. Schedule 80 PVC pressure piping is also acceptable for compressed air and vacuum piping.
4. DI Water
   a. Piping, fittings, and valves shall be schedule 80 Type 1 homopolymer polypropylene, stainless-steel, or approved equal.
   b. Mechanical fittings only.
   c. Schedule 80 PVC is allowed as an alternate material.
5. Emergency Showers/Eyewash
   a. Provide emergency shower at door, barrier free emergency shower unit, and eye wash at laboratory sink when applicable.
   b. Mixing valve shall mount under sink or recessed in cabinet.
      1) Reference domestic water valves in this Section
   c. Drains are required near locations; consider installation away from equipment.
   d. Bradley faucet-mount eyewash model: S19-200B is not allowed to be installed at PSU.
   e. An emergency eye wash should also be installed in janitor closets when a chemical dispenser is present or installed and be provided with tempered water as per ANSI/ISEA Z358.1.
6. Acid Waste
   a. Use ORION with fuseal or mechanical fittings.
   b. Acid waste floor drain shall have sediment basket, acid resistant, polypropylene with heavy duty strainer and weep holes.
   c. No-hub fittings or compression.
   d. Non-piping manufacturer couplings or bands are strongly discouraged.
7. Pipes and piping systems
   a. Those which contain or transport hazardous substances, including compressed air, must be labeled to meet Oregon OSHA regulations. This is to be adhered to regardless of the aesthetic impact it may have in a finished space

END OF SECTION 221000

SECTION 22 30 00 - PLUMBING EQUIPMENT

PART 1 - GENERAL

1.1 DESIGN AND PERFORMANCE REQUIREMENTS

A. Plumbing Equipment
1. Provide valves and flanges at appropriate locations to accommodate maintenance and future replacement.
2. Provide concrete housekeeping pads when applicable.
3. Contractor to provide required equipment data for PSU deferred maintenance software.
4. Ensure that replacement parts and components are available locally.
5. All equipment shall be started up by factory representative. Documentation shall be provided to owner.
6. Provide suitable clearance for maintenance.

PART 2 - PRODUCTS

2.1 PLUMBING EQUIPMENT

A. Domestic Circulation Pumps
1. Manufacturer shall be Grundfos or as approved by PSU Project Manager.

B. Packaged Domestic Booster Pump System
1. Manufacturer: Grundfos or as approved by PSU Project Manager.

PART 3 - EXECUTION

3.1 PLUMBING EQUIPMENT

A. Identification of Plumbing Equipment
1. For identification purposes, stickers shall be used in lieu of stenciling.

B. Domestic Expansion Tanks Armtrol – 4.5 gallons and above
1. Domestic expansion tanks shall be tested and stamped in accordance with ASME boiler and pressure vessel code. Pressure shall match the maximum pressure the system is designed for.
2. Provide support floor mounted tanks with steel legs. Provide air-charging fitting and isolation valve, and drain down port.

C. Domestic Circulation Pumps
1. Pressure rating shall match maximum working pressure of system.
2. Body shall be bronze or stainless-steel construction. Shaft shall be stainless, ground, and polished.
3. Motor shall be non-overloading at any point on pump curve, be open, drip-proof, and quiet operating. Motor shall have sleeve bearings, rubber mounted construction, and built-in thermal overload protection.
4. Pump may be controlled off of aquastat or via the building automation system.

D. Sump Pump/Sewage Ejector Pump
1. Provide grinder on the impeller. This is not required for elevator sump pumps.
2. Provide check valve and shut off valve on discharge of the pump.
3. Provide perforated 24” x 24” steel basin cover and frame.

E. Packaged Domestic Booster Pump System
1. Minimum pressure setting shall be 4 feet above top of highest roof level
2. Design System to balance pressures on each floor.
3. Skid to be furnished with VFD and pump controller located in same panel. Control panel shall accommodate seamless connection to PSU building automation system.

4. Flowtherm skids are only allowable with Grundfos motors and pumps.
5. System shall be factory assembled and tested, and shall be delivered with complete operating controls.
6. Common discharge header shall be equipped with purge valve which will divert water to drain in the event of pump failure.
7. Pump controller, at a minimum, shall provide low suction cut out, high system pressure cut out, and a no-flow shut down when the hydro pneumatic tank can handle demand.
8. System shall be equipped with separate hydro-pneumatic tank to provide low flow demands to the building. Tank shall be equipped with replaceable bladder.
9. Pump Seals shall be Unitized EPR/SiC/SiC. Rated for 1000 ppm undissolved solids.
10. Requirement for a booster pump for any new construction or major construction.

END OF SECTION 223000

SECTION 22 40 00 - PLUMBING FIXTURES

PART 1 - GENERAL

1.1 DESIGN AND PERFORMANCE REQUIREMENTS

A. Plumbing Fixtures
1. Fixture Connections:
   a. Provide threaded ¼ turn angle stops without any loose keys.
   b. Male IPS connections such as sweated male adapter, or brass nipples, escutcheon rings and stainless-steel braided hose for hot water and cold-water connections to fixtures.
   c. Chrome p-trap for lavatories, ABS acceptable when p-trap is not exposed.
2. Accessible fixtures shall be provided per code; meet all barrier free requirements.
3. For all plumbing fixture replacements or additions reference the Uniform Plumbing Code 2006 Table A-2.
4. Hydration Locations/Bottle Refill Stations
   a. Bottle refill stations may include hydrations stations, retrofitted kits for water fountains, or other solutions that allow users to easily refill water bottles. Install at least one refilling station on each floor of new construction projects and at least one station per building in existing buildings.
   b. Pentek filters with quick disconnect, or as approved by PSU Project Manager, are preferred for hydration stations and combo drinking fountain / hydration stations. Provide minimum 16”x16” access door for cleaning and filter replacement.
   c. Provide combination drinking fountain and hydration station for all new buildings and major remodels. These shall be recessed in walls and splash-proof.
5. Residential Laundry Sinks
   a. Two bowls are preferred
6. Residential Sink Garbage Disposers
   a. Residential sink garbage disposals are not allowed as their misuse and liability to tenant and other building occupants outweigh convenience.

PART 2 - PRODUCTS

2.1 PLUMBING FIXTURES

A. Hydration Locations/Bottle Refill Stations
1. Manufacturer: HAWS, Elkay, Chicago, or as approved by PSU Project Manager.
   a. Elkay Enhanced EZH2O Bottle Filling Station - Model LZSTL8WSSP
   b. Haws Recessed-Mount Bottle Filler - Model 2000S
   c. Elkay Two-Level Drinking Fountain - Elkay Soft Sides Heavy Duty Bi-Level Fountain Non-Filtered, Non-Refrigerated Stainless EHW217C Elkay Cane Apron for EHW Stainless Steel LKAPR2. Accessory - In Wall Carrier (Bi-Level) for EHW217 models -MPW200
   d. Chicago Deck Mounted Glass and Bottle Filler - 712-ABCP

B. Drinking Fountains
1. If drinking fountains are approved and installed, fountains shall include Chicago bottle filler infrastructure for filling water bottles.
2. Manufacturer: HAWS or as approved by PSU Project Manager.

C. Hose Bibs
1. At a minimum one hose bib with isolation and freeze protection shall be provided on building roof tops for maintenance purposes. The consultant design team and PSU project manager shall determine if more than one is needed based on the size, amount/type of equipment and physical complexity of the roof.
2. Provided JR Smith 5906 or approved equal.

2.2 COMMERCIAL FIXTURES

A. Commercial /Public Kitchen Sinks

1. Manufacturer: Stainless steel Kohler, Chicago and Elkayor as approved by PSU Project Manager.
   a. Chicago Kitchen Sprayer - 510-GCLABCP
   b. Kohler “Toccata” top-mount kitchen sink K-3348-3
   c. Chicago kitchen faucet - 1100-E35-317XKABCP

B. Commercial/Public Lavatories
1. Manufacturer: Kohler, Lavatories; Chicago, Faucets; or as approved by PSU Project Manager.
   a. American Standard “Lucerne” wall-hung lavatory
   b. Chicago lav faucet - 802-E70-317XKABCP
   c. Chicago metering lav faucet - 857-E2805-665PSHAB
   d. Chicago DI water deck mounted faucet - 838-CP
   e. Chicago wall mounted janitorial faucet - 445-LESXKAB
2. Electronic faucets are not allowed, only in lieu of electronic faucets are when metering faucets are allowable and shall be Chicago model: 857-E2805-665PSHAB or approved equal.

C. Commercial/Public Water Closets and Urinals
1. Water Closets: Kohler, American Standard, or as approved by PSU Project Manager.
   a. American Standard “Cadet Right Height” elongated pressure-assisted toilet 1.6gpf/6.0Lpf
   b. Kohler K-84325, Kingston Ultra, Top Spud Flushometer bowl
   c. Kohler “Wellworth” pressure-assisted toilet - K-3505
2. Urinals: Approved by PSU Project Manager
   a. American Standard “Trimbrook” urinal
   b. Kohler “Dexter” urinal - K-5016-ET is preferred
3. Manual Flushometers: Sloan Upper Cut or as approved by PSU Project Manager.
   a. Sloan “Uppercut” Dual-Flush Flushometer - WES-111
   b. Sloan “Royal” model flushometer - 186
4. For each major bathroom group (3 stalls or more), or in single occupancy bathrooms, provide one bariatric water closet and carrier.
   a. The carrier and water closet assembly shall be able to hold up to 1000 pounds.
   b. If bariatric 1000 pounds carrier is not feasible than a 750 pound will be acceptable.
   c. WC Carrier: Zurn for bariatric toilets, with 1000# capacity: Model Z1203-NL4. (750# Z1203-N-XH)
5. When single inlet/mixed or tempered water faucet is used. Supply OPSC required mixing valve ASSE 1070 compliant. Use Symmons 8210CK.

D. Commercial Sink Garbage Disposers
None

2.3 RESIDENTIAL FIXTURES

A. Residential Laundry Sinks
1. Manufacturer: Mustee or as approved by PSU Project Manager.

B. Residential Lavatories
1. Manufacturer: Kohler, American Standard Lavatories
2. Faucets - Symmons S-20, Chicago; or as approved by PSU Project Manager.
3. Lavatory pop-up assembly shall be a Delta RP5651 or approved equal.

C. Residential Tub-Shower Units
1. Tub and shower: American Standard, Kohler, or as approved by PSU Project Manager.
2. Drain and overflow: Watco or as approved by PSU Project Manager.
3. Shower drains: JackRabbit or as approved by PSU Project Manager.
4. Shower valve: Delta Universal R10000NW2S or as approved by PSU Project Manager.
5. Trim: Delta T1020 or as approved by PSU Project Manager.
6. Tub spout: Delta RP5834 or as approved by PSU Project Manager.

D. Residential Accessible Tub-Shower Units
1. Shower valve:
   a. Delta Universal R10000NW2S
      1) Model: C-96-500-B30-V-X-B-1.5-lp (-X (Integral Service Stops), -B (Chrome Brass Escutcheon), -1.5 (1.5 gpm flow rate) –LP (Loop handles).

2) Include: balancing valve, 30” slide bar with hand shower, 60” flex metal hose, 2.0 gpm flow restrictor.

b. Or as approved by PSU Project Manager.

2. Roll-in and Transfer shower:
   a. Everfab, (S3839A) ADA unit, 36” x 36” finished floor space.
   b. Fiberfab (38H1) 38” x 42” ADA unit opening. 36” x 36” finished floor space.
   c. Swanstone SF-3464 when a full fiberglass unit cannot fit the space
   d. Or as approved by PSU Project Manager.

E. Residential Accessible Water Closet Units
1. Manufacturers
   a. Water Closet (Tank Type): American Standard Cadet Pro or as approved by PSU Project Manager.
   b. Water Closet (Non-tank): Gerber 10.5” rough in or as approved by PSU Project Manager.
   c. Flushometer Valve for Non-tank toilets: Sloan 111 royal series, 1.28 GPM or as approved by PSU Project Manager.
   d. Flushometer Valve for Urinals: Sloan or as approved by PSU Project Manager.
   e. Toilet Seat: Church 100ec and 585ec or as approved by PSU Project Manage.

F. Residential Kitchen Faucets
1. Sink Mounted- Delta 100 DST or approved equal
2. Wall Mounted- Chicago with stops and arms, 445-18ABCD or approved equal.

G. Residential Washer Boxes
1. Manufacturer: Wirsbo, Sioux Chief with shock arresters or as approved by PSU Project Manager.
2. 1/4 turn valves, angle stops, and lead free.

2.4 LABORATORY FIXTURES

A. Laboratory Faucets
1. Chicago laboratory faucet LWM1-B11-E or as approved by PSU Project Manager.
2. DI water deck mounted faucet: Chicago 838-CP, Water Saver L7833

PART 3 - EXECUTION

3.1 GENERAL FIXTURE INSTALLATION

A. Drinking Fountains
1. If drinking fountains are approved and installed, fountains shall include Chicago bottle filler infrastructure for filling water bottles.
2. Do not specify refrigerated drinking fountains.

B. Mop Sinks
1. Mop sinks shall be flush to the ground and installed with stainless steel backing.
2. Stainless steel splash guards on wall sides, extending to a min of 24" from top of basin up shall be provided.

3.2 COMMERCIAL FIXTURE INSTALLATION

A. Commercial /Public Kitchen Sinks
1. Faucet shall have means to prevent HW and CW cross-over (e.g. check valve).
2. Provide Chicago Dual Handle with wrist blade handle and quarter turn ceramic cartridges.

B. Commercial/Public Lavatories
1. Wall hung and concealed arm carriers and countertop installs are acceptable.
2. Single handle faucets not allowed; provide two handle wrist blades with quarter turn ceramic cartridge.
   a. An exception to this are metering faucets referenced below.
3. Use vandal proof faucets.

C. Commercial/Public Water Closets and Urinals

1. For new construction waterless urinals are not preferred but if selected allow future conversion to wet urinals in case necessary. Provide 3/4” cold water stub out adjacent to waterless urinal that is equipped with a ball valve and is capped/plugged.
2. Provide additional backing for wall hung water closets and urinals in order to support additional load.
3. Dual flush flushometer is preferred. No motion detection or auto flushing is allowed for urinals. Confirm plumbing flushometer design with PSU Project Manager prior to specifying.
4. Water closet seat shall be commercial grade, open front, anti-microbial, solid white or black.
5. Water closets shall be as water efficient as possible and use 1.28 gallons per flush or less.

D. Commercial Sink Garbage Disposers

1. Garbage disposals are only permissible in a commercial kitchen application. None are to be installed within breakrooms or common area sinks, labs, etc. Garbage disposers should only be used if approved by PSU Project Manager.
2. Provide switches, controls, solenoid and flow control valves, vacuum breakers and appropriate sink or cone attachments.

3.3 RESIDENTIAL FIXTURE INSTALLATION

A. Residential Lavatories

1. Faucet shall have means to prevent HW and CW cross over, i.e. check valve.

B. Residential Tub-Shower Units

1. Mixing valve shall have integral service stops.

C. Residential Accessible Tub-Shower Units

1. Shower system shall include shower valve, shower head with arm and flange, lever diverter, wall/hand shower with flexible metal hose, and slide bar.
2. Shower valve shall have integral service stops.

D. Residential Accessible Water Closet Units

1. Dual flush feature is preferred

3.4 LABORATORY FIXTURE INSTALLATION

A. Laboratory Sinks

1. Provide stainless steel single compartment with ledge, 18-gauge type 316 drop in type.
2. Provide type 316 strainer with tail piece.
3. Provide epoxy resin sinks or stainless-steel compartment.

B. Laboratory Faucets

1. Provide deck mount Chicago Faucets with gooseneck with vacuum breaker.
2. Provide four arm color coded handles, serrated nozzle, and single supply turret type.

END OF SECTION 224000

SECTION 23 00 00 - HVAC COMMON WORK AND MISCELLANEOUS

PART 1 - GENERAL

1.1 SUMMARY

A. Related Sections
   1. Appendix 26.1 - Energy Conservation Guidelines
   2. Appendix - Laboratory Standard & Design Guidelines

1.2 DESIGN AND PERFORMANCE REQUIREMENTS

A. Code Requirements
   1. Ensure code required and adequate clearance for ease of accessibility to systems/equipment for repair, maintenance, or replacement.
   2. All HVAC systems shall be installed per code, ASHRAE, SMACNA, and industry standards.
   3. Identify all HVAC piping and equipment with stamp tag and flow direction. Color of label shall follow Code.
   4. The minimum required SEER rating's for new HVAC equipment shall comply with the Oregon Energy Code, PSU strives to exceed code so the project team shall provide equipment suggestions that accomplishes this.
   5. All new HVAC equipment shall be charged with refrigerant / hydrochlorofluorocarbons (HCFC) that adhere to the Environmental Protection Agency (EPA) requirements and phase out protocols.

B. Provide sufficient clearance wherever possible to allow easy access to systems and equipment for repair, maintenance and replacement.
   1. Vertical clearance in mechanical space shall be 6’-5” minimum where possible.

C. Select equipment and supplies that are locally available when possible.

D. All systems shall be designed to optimize energy efficiency, improve indoor environmental quality, and assist in achieving credits in the LEED rating system.

E. Vibration and noise must be considered in design. Install systems where it causes the least disturbance. Otherwise use noise and/or vibration dampening. If duct boots between spaces are necessary, include adequate offset and insulation.

F. Install ample valves and unions to isolate equipment, main lines, and branch lines for unobtrusive maintenance operations. Bypasses shall also be provided at incoming water service entry and at items requiring maintenance.

G. Commissioning, testing, and balancing of air systems shall be performed prior to the conclusion of each project. All filters shall be replaced, strainers cleared, and equipment started up prior to balancing.

H. PSU’s standard temperature range is 68-76 Degrees Fahrenheit.

I. Screening shall be provided for mechanical equipment visible from ground level, and as required by the City of Portland.

1.3 IDENTIFICATION

A. Summary
   1. Comply with ANSI A13.1 for lettering size, length of color field, colors, and viewing angles of identification devices.
   2. Include flow direction for both air and water systems.
   3. Provide ceiling tile labels for equipment (labeled orange) and hydronic valves (labeled Green). Labels shall be machine generated, adhesive backed with black letters, clear tape.
   4. Coordinate with facility maintenance personnel to ensure consistency with the existing system.
   5. Provide stenciled signs on each access door and housing, indicating purpose of access.

6. Any system that has heat trace installed, the insulation shall have a label marking the heat tracing.

B. Piping
1. Mechanical piping shall be labeled with flexible, vinyl film tape with pressure sensitive extra strength adhesive backing. Mechanically fastened piping is acceptable as well. Provide manufacturer label for direct bury applications when required.
2. If pipe is insulated, note if polypipe or plastic pipe is being used on insulation jacket.

C. Valves
1. Provide a valve schedule as a part of the submittal package. Upon approval from owner, these shall be framed and installed appropriately in building mechanical spaces upon completion of project. Valves shall be tagged in the field per schedule.
2. Tag balancing valves with GPM or CFM and valve position after balancing is completed.

D. Mechanical Equipment
1. Provide stickers for identification rather than stenciling.
2. All above ceiling equipment shall be marked using label tape markers affixed to the ceiling grid, or similar methods.
3. Identify equipment and control panels with plastic nameplates riveted to equipment body.

1.4 COMMISSIONING

A. A commissioning plan and report must be submitted.

B. Contractor shall submit one electronic and five (5) hard copies of commissioning documents to Project Manager.

C. Commissioning agent needs to review submittals and O&M's.

D. Commissioning agent shall coordinate training of PSU personnel.

E. There must be a mandatory review of system/equipment within one year of building turn over.

F. For projects seeking LEED certification, compliance with LEED definition of "Enhanced Commissioning" must be required.

G. Commissioning agent shall maintain an activity/action log throughout entire commissioning process.

1.5 TESTING, ADJUSTING AND BALANCING

A. Coordinate testing and balancing (TAB) work with other trades when applicable (e.g. fire life safety, BAS controls, commissioning agent, etc.).

B. TAB provider shall be NEBB or AABC certified.

C. TAB shall be performed under simulated normal building operating conditions with doors and windows closed, ceiling's installed, etc.

D. New filters shall be installed before balancing and again prior to handover to owner.

E. Prior to TAB, examine systems and system components and verify their operation and accessibility.

F. Systems shall be flushed of debris prior to balancing. Pete's plugs are required across major water balancing components.

G. Provide one electronic copy, and 3 hard copies of the balancing report. Include equipment calibration reports.

H. Mark on volume balancing dampers the final balancing settings/position.

I. TAB shall be equipped with appropriate to prefer air/water balancing PSU control systems

PART 2 - PRODUCTS

2.1 METERS AND GUAGES

A. Manufacturers:
1. Steam Meter: Cadillac Vortex Shedding Meter or as approved by PSU Project Manager.
2. Chilled Water Flow Meter: Onicon (non-turbine type) or as approved by PSU Project Manager.
3. Gas Meter: Elster RABO or as approved by PSU Project Manager.
4. Digital Electrical Sub-Meter: Siemens DEM or as approved by PSU Project Manager.
5. Condensate Meter: Onicon F-1000 Turbine Flow Meter, or approvedby PSU Project Manager.
6. Make-up water meters for cooling towers and other mechanical closed / open loop systems shall be Carlon JSJ, Cadillac or approved by PSU Project Manager.

B. All piping components shall be rated for the service, pressure, and temperature as called out by design engineer.

C. Provide manual temperature and pressure gauges directly in the piping on the inlet and outlet of hydronic equipment. Provide additional gauges as required.

D. All gauges to have shut-off valve in order to remove/replace/test.

2.2 HANGERS AND SUPPORTS

A. All hangers, rods, clamps, protective shields, components, and hanger accessories shall be hot dipped galvanized.
1. Hanger rod shall be steel, galvanized, threaded on both ends, or continuously threaded. Hanger spacing shall follow guidelines per the Oregon Mechanical Specialty Code and SMACNA standards.

B. Duct stiffeners are preferred over additional supports in the appropriate locations. Stiffeners shall be installed outside of the airstream.

C. Seismic restraints, anchorage, and reinforcements shall be provided for all piping and designed to withstand forces generated by earthquake movements.
1. Seismic bracing and vibration isolation requirements shall be analyzed and verified by a specialized design professional

D. Support all vertical risers/piping per floor. Support all horizontal piping per code and schedule. Floor penetrations must be sleeved and sleeve must extend a minimum of 1” above finished floor.

E. Provide roller guides, anchors, and expansion joints as specified by structural/mechanical engineer.

F. Link seal, or equivalent product shall be used on each end of penetration when penetrating campus loop tunnels, basements, or between different building’s and structures with utility piping.

2.3 INSULATION

A. All fan enclosures shall be insulated.

B. Provide reusable insulation blanket around valves, pumps, and piping specialties.

C. Insulation shall be sized correctly with no air gaps and per manufactures recommendations.

D. Ductwork
1. Provide flexible glass fiber, commercial grade insulation with factory applied reinforced aluminum foil jacket. Provide ductwork insulation accessories for complete installation.
2. All ductwork installed outside shall be internally insulated.
3. Contractor shall make shop available for owner review of duct fabrication and duct liner installation.
4. All supply, return, and outside air ductwork shall be insulated.

E. Piping
   1. For steam, condensate return, and boiler, feed water piping insulation shall be molded glass fiber with aluminum jacket. Provide reusable insulation blanket around valves, pumps, and piping specialties.
   2. For chilled water piping, provide polyisocyanurate foam insulation with PVC jacket. Provide blue jacket color for chilled water systems. For smaller diameter piping within buildings, fiberglass insulation is acceptable. Underground direct bury piping shall be doubled walled with the outer carrier pipe to be constructed of factory prefabricated HDPE jacketed system of factory pre-insulated pipe with all necessary fittings. For steam, condensate return insulation shall be high temperature foam insulation capable of withstanding continuous temperatures of 400 Degrees Fahrenheit. For chilled water, provide polyurethane foam insulation.
   3. Pre-manufactured insulation elbow shall be used for piping insulation. Foam fill of elbow is unacceptable.
   4. Outdoor piping shall be insulated with aluminum jacket.
   5. Underground direct bury piping shall be doubled walled with the outer carrier pipe to be constructed of factory prefabricated HDPE jacketed system of factory pre-insulated pipe with all necessary fittings. For steam, condensate return insulation shall be high temperature foam insulation capable of withstanding continuous temperatures of 400 Degrees Fahrenheit. For chilled water, provide polyurethane foam insulation.

2.4 ELECTRIC HEAT TRACING

A. Electric heat tracing shall be installed on exterior piping that is subject to freezing.

B. Label pipe indicating heat tracing as well as which circuit and panel it is fed from.

C. For large systems provide a front-end controller, with alarm-able output

D. Use 120VAC system.

E. Heat tracing systems should be clearly labeled on the systems they are serving.

2.5 LIQUID FUELING SYSTEMS

A. If using an automated fueling system, the system must have a fuel return system that is capable of handling all of the feed fuel. Additionally, it must have secondary containment, automatic shut-off and alarm devices, manual re-set, and a gravity fuel return system.

B. Intertie automated fueling system with building automation system.

C. The liquid fueling system must be tested prior to start up with applicable medium (e.g. diesel).

D. Place sight glass on outside of all fuel storage tanks in order to confirm fuel levels.

E. Leak detection system on any storage tanks is required.

F. Capability to lock out manual fueling systems is required.

G. Underground fuel storage tanks and associated piping must comply with federal and state regulatory requirements and must be specifically approved by PSU's EHS department.

2.6 FACILITY NATURAL GAS SYSTEMS

A. Valves
   1. Natural gas pressure reducing valve (PRV) shall have test ports on each side of valve. Provide a dedicated PRV for each piece of equipment. Design flows shall be in the middle of the PRV spring range.
   2. A seismic shut-off valve is required at the building's main gas feed. The seismic shut-off valve must have a 3-valve bypass. Vertical and horizontal valve considerations need to be considered. All installs need to be coordinated with utility provider. Do not install on utility side of the meter.
   3. When seismic valves are installed contractor to protect valve from aggressive physical contact in order to prevent valve from inadvertently tripping.

B. Piping
   1. If piping is exterior to building, it shall be finished with a weather resistant finish.
   2. Natural gas piping greater than 1” in diameter is required to be rigid piping and painted bright yellow.
   3. Piping must be tested and approved by City of Portland prior to start up.
   4. Yellow armaflex can be used for the last two feet length of gas connections less than 1”.
   5. Steel pipe needs to be seamless
   6. Pipes and piping systems which contain or transport hazardous substances, including compressed air, must be labeled to meet Oregon OSHA regulations. This is to be adhered to regardless of the aesthetic impact it may have in a finished space.

C. Non-Utility main line gas meters must have a bypass.

D. For lab applications, provide emergency gas shut-off at lab entry.

2.7 CHLORINATION SYSTEM FOR POOLS

A. Manufacturer: Chlorine Feed System: Pulsar One or as approved by PSU Project Manager.

B. All Seals must be Teflon. Rubber is not allowed.

C. Use liquid chlorine for pools.

PART 3 - EXECUTION - NOT USED

END OF SECTION 230000

SECTION 23 09 00 - INSTRUMENTATION AND CONTROL FOR HVAC

PART 1 - GENERAL

1.1 SUMMARY

A. Related Sections
   1. Div. 23 HVAC
   2. Div. 27 Telecom Infrastructure
   3. Div. 28 Fire Alarms
   4. Appendix 26.1 - Energy Conservation Guidelines

1.2 REFERENCES

A. All new work shall comply with NEC and all local codes.

1.3 DESIGN AND PERFORMANCE REQUIREMENTS

A. Siemens Insight is currently PSU's centralized control system. All new control systems shall interface accordingly.

B. Siemens Desigo building automation system shall be provided for major control system replacements and major remodels/new construction.

C. Contractor shall participate and provide a 50% and a 90% review of control drawing's and devices. As-builts shall be delivered in PDF and AutoCAD format.

D. Throughout the creation of the instrumentation and controls construction specifications, contact PSU controls team for review.

E. The design of the BAS shall support networking of operator workstations and Building Controllers. The network architecture shall consist of two levels, an Ethernet based primary network for all operator workstations, servers, and primary DDC controllers along with secondary Floor Level Networks (FLN) for terminal equipment application specific controllers

F. Controls systems that shall be wired and installed via MSTP over BACNET. BACnet over IP will not be an approved method of installation.

G. As required, smoke control panels shall integrate seamlessly with both PSU's BAS standard and the campus standard for fire alarm panels: Silent Knight.

PART 2 - PRODUCTS

2.1 NON-MOTORIZED VALVES

A. Manufacturer: Zwick or as approved by PSU Project Manager. Zwick valves should be only used for campus loop piping 3" or bigger.

B. If Mueller butterfly valves are installed, a three-year parts and labor warranty needs to be provided.

C. Valve tags are required for all valves. Valve tags shall be "System ID - Valve ID". System ID identifies what type of system it is e.g. Well Water Supply / Return, Condenser Water Supply / Return, Domestic Cold Water, etc. etc., Valve ID is the type of valve e.g. ball valve (BV), Check Valve (C1). For example, "CDS-BV" this would mean a ball valve on a condenser water supply piping.

D. Valve operations must be verified by contractor with PSU Project Manager prior to project closeout.

PART 3 - EXECUTION

3.1 COMMUNICATION

A. Wireless devices are not preferred but shall be approved by PSU Project Manager on a case by case basis.

B. Communication to 3rd party devices shall be BACNET/IP is preferred. A third party device that is P1 or FLN compatible is acceptable (e.g. Onicon BTU meters, ABB VFD's).

C. The design of the BAS shall support networking of operator workstations and building controllers. The network architecture shall consist of three levels: Management Level Network (MLN) for all operator workstations and servers, Building Level Network (BLN) for primary DDC controllers, and Automation Level Network (ALN, aka FLN) for terminal equipment application specific controllers.

3.2 PROGRAMMING

A. In lead/lag scenarios when a start command is issued and the equipment fails to run, do not remove the start command from the failed equipment.

B. Limit the use of the resident point, "$loc's". When they are used, create a virtual point that corresponds to the value of the "$loc".

C. For Building automation system programming "Define" statements shall not be used.

D. All generators shall have a run status tied into the BAS.

3.3 GRAPHICS

A. All points shall be shown on graphics.

B. On graphics of major/critical equipment, provide a direct link to the sequence of operations and IOM. For terminal equipment and application specific controllers, provide a link to the application manual.

C. Wherever feasible, online dashboard applications must be considered in new buildings, renovations, and remodels. If these applications are used, the system shall be web based and not directly tied into PSU's network. All PC monitors shall be of flat panel type and shall support a minimum display resolution of no less than 1280 x 1024 pixels. The display shall have a minimum of 19" visible area in diagonal measurement. Separate controls shall be provided for color, contrasts, and brightness. The screen shall be non-reflective.

3.4 DEVICES

A. All actuators shall be electronic.

B. For chilled water and condenser water flow sensing, no turbine type meters are allowed. Provide Onicon Model F(B)-3500 or as approved by PSU Project Manager.

C. All enclosures shall be labeled with a minimum of node name, system name, and power source.

3.5 LOW VOLTAGE WIRING

A. Provide color coded wiring per Div. 27 Telecom Wiring Standards. Wiring shall be labeled at each end with point name and address.

B. Contractor shall provide all supports for wiring. Wiring can't be supported from existing conditions (e.g. Ceiling grid hangers, sprinkler pipe hangers).

C. Communication wiring shall be 24 AWG, twisted pair, shielded, and low capacitance.

D. Power for BAS shall have dedicated circuits.

E. All systems requiring interlock wiring shall be hardwired interlocked and shall not rely on the BAS programming to operate (e.g. emergency generator to fuel oil pump interlock, emergency generator damper interlock, etc.).

F. All safeties shall be hardwired. Safeties shall not rely on the BAS to act and shutdown systems upon detection of a failure, safety limit, or alarm.

3.6 COMMISSIONING

A. Provide point to point check out sheets prior to commissioning activities verifying functionality of each device.

B. The contractor's technical support team (including programmer) personnel shall be consistent throughout the project including commissioning.

C. After commissioning remove all unnecessary trending.

END OF SECTION 230900

SECTION 23 20 00 - PIPING AND PUMPS

PART 1 - GENERAL

1.1 SUMMARY

A. Related Sections
   1. 23 00 00 Common Work & Misc.

PART 2 - PRODUCTS

2.1 PIPING

A. Hydronic Piping
   1. Hydronic piping shall be copper or black iron. Plastic piping is not allowed.
   2. Hydronic piping must have isolation valves and unions at all pieces of equipment. Unions shall be placed at applicable locations for equipment replacement. Verify operations with Owner Representative prior to project closeout.
   3. For radiant heating panels, use manufacturer's factory rated hose with swivel end (factory assembled). Field quick connects are not allowed.
   4. Provide dielectric connections as required.
   5. Prep, clean, and store piping per the design engineer's direction and to ensure no unneeded chemical/bacterial contamination.
   6. Welded systems are preferred. Grooved systems, except for steam piping, are allowed with approval. Crimp systems are also allowed with approval.
   7. Where pipes penetrate floors and walls, sleeves around pipes shall extend a minimum of 4" above floor level to act as containment around the penetration.
   8. Provide drains at low points. Slope piping toward drains as required.
   9. Ports for corporation stops need to be located as close to the top of pipe as possible and not beyond 22.5 degrees in either direction.
   10. Provide automatic air vents at all high points of the system

B. Steam and Condensate Piping
   1. Steam condensate return piping, whether gravity or pumped, shall be carbon steel. For piping 2 inches and smaller, schedule 80 is preferred but schedule 40 is acceptable based on application and engineering judgment. For piping larger than 2 inches, schedule 40 carbon steel is acceptable. Socket-welded or threaded connections may be used for piping 2 inches and smaller, and butt-welded or flanged connections for piping greater than 2 inches.
   2. Steam valves that control heat exchangers shall fail open.
   3. Contractor to adhere to preparation and storage methods as specified by mechanical engineer.
   4. Contractor to adhere to flushing and cleaning methods as specified by mechanical engineer.
   5. Neutralize and chemically treat steam piping as specified by Portland State University chemical treatment vendor.
   6. All new installed steam header piping is designed for future conversion to 150 psig system operating at 125 psig.
   7. Expansions joints, hangers, guides and rollers need to be submitted via shop drawing and approved by mechanical engineer.
   8. Each system and piece of major equipment are required to separate isolation valves. Isolation valves should be approved by Owner.

2.2 PUMPS

A. Manufacturer: Grunfos, Paco, Taco, Bell and Gossett, BFS Industries (Condensate Pumping Stations), or as approved by PSU Project Manager.

B. For chilled and condenser water pumps, pump seals shall be Unitized EPR/SiC/SiC. Rated for 1000 ppm undissolved solids. Provide spare seal at the conclusion of the project.

C. Impellor shall be silicon bronze, fully enclosed, keyed to shaft. Trim impeller to maximum flow rate without overloading the motor.

D. Shaft shall be stainless steel.

E. Condensate pumping stations shall come equipped with a welded steel tank. Motors are not required to have a VFD. Ensure means to fully drain tank. Tank and pump shall be rated for 180 F.

F. Sump pumps shall be equipped with a mechanical float and alarmed for high levels.

G. Sewage injection pumps shall have a grinder on the impeller.

H. Submit documentation that pumps are in proper alignment.

I. Piping needs shall be independently supported prior to pump installation; the pump should not bear any of the weight.

J. Provide isolation valves, check valves, and unions or flanges for maintenance and replacement purposes.

K. All pumps should be evaluated for operation with VFDs (Variable Frequency Drives) or ECMs (Electronically Commutated Motors).

2.3 AIR AND DIRT SEPARATOR'S

A. Manufacturer: Spirotech or as approved by PSU Project Manager.

B. Consider chilled water loops, condenser water loops (closed and open), and steam condensate return systems. Required for chilled water and boiler plants.

C. During construction blow-down debris shall be captured and removed prior to floor drain.

2.4 STEAM TRAPS

A. Float and Thermostatic Steam traps are preferred, Armstrong 800 and 813, or approved equal, are required when applicable.

B. Provide union or flanged connections at both ends.

C. Provide gate valve and strainer at inlet and gate valve. Check valve at discharge.

D. For major steam traps provide by-pass and blow-down valves. Major steam traps are: drip-legs, headers, and major pieces of equipment.

E. Overhead trap blow-down valve, ensure it can be operated from the ground level.

2.5 CHEMICAL TREATMENT

A. Contractor shall maintain chemicals in system for 3-months after installation.

B. When possible, maintain consistency by using the same vendor and product line for each individual piece of equipment/station.

C. Mount information at chemical stations shall include products is being used, chemical levels, system served, etc. O&M manuals need to be available at station.

D. Systems shall utilize corporation stop for injection and testing points of chemical. Provide adequate space for corporate stops in piping systems.

E. Water treatment systems for boiler water systems shall be included in the Contract Documents. Systems controlled by metering pumps feeding chemical from barrels are preferred. Prefer Milton Roy metering pumps or as approved by PSU Project Manager.

F. Boiler water steam must have a de-oxygenator (de-aerator) on the system for both large and small boilers.

G. For new equipment the Contractor is responsible for proper cleaning, passivation and chemical treatment for the first three months after start up.

H. Before tying into PSU system loops, contractor must collect before and after samples at different points and provide documentation to owner.

I. Each closed loop must have a sampling port placed before and after a major piece of equipment.

J. When sampling, first allow water run clear and then take the sample.

K. For chemical delivery provide PEX or copper with heat fusion connections. Provide isolation valves for all branch lines.

L. Chemical treatment must be considered during design. Training must be included in the bid.

M. Preferred liquid feed for cooling towers, closed loops, boilers, fountains and pool chlorinators.

N. Pot feeders are good for immediate adjustments and should be kept in the design.

O. During the submittal process, contractors to complete a chemical treatment plan to PSU and design engineer for review

PART 3 - EXECUTION - NOT USED

END OF SECTION 232000

SECTION 23 30 00 - HVAC AIR DISTRIBUTION

PART 1 - GENERAL

1.1 SUMMARY

A. Related Sections
   1. 23 00 00 Common Work & Misc.
   2. Appendix - Laboratory Standard & Design Guidelines

PART 2 - PRODUCTS

2.1 AIR DUCT ACCESSORIES

A. Manufacturer:
   1. Ruskin, Greenheck, Tamco Air-Foil Control dampers or as approved by PSU Project Manager
   2. All actuators shall be Siemens, Belimo or approved by PSU Project Manager.

B. Volume dampers shall be no lighter than 18 gauge and reinforced to prevent vibration.

C. Control dampers shall be opposed blade and air foil type. For exhaust and outside air dampers, blade edges must be sealed to prevent leakage. Leakage testing shall be required to ensure compliance with manufacturer's performance criteria.

D. Dampers that are greater than 25 ft. sq. in area shall be installed in two or more sections.

E. Install safety screen that shall be removable for cleaning where fan inlet/outlet or moving parts are exposed. An example of this would be a screen around a belt driven motor.

F. Install flexible duct connectors to air handling units. Provide weather guard when installed outside.

G. All dampers and their accessories shall be accessible for future repair/replacement. Access points shall be visibly labeled from occupied space.

2.2 AIR OUTLETS AND INLETS

A. Manufacturer: Titus, Price, or as approved by PSU Project Manager.

B. Provide gooseneck or rain cap to prevent water intrusion for outdoor installation.

C. In moist environments (e.g. locker rooms), provide aluminum construction and stainless-steel mounting hardware.

D. Provide integral balancing dampers where balancing dampers are not already specified.

E. For door louvers, minimum steel thickness is 20 gauges.

2.3 AIR TERMINAL UNITS

A. Manufacturer: Titus, Trane, Siemens (lab applications only) or as approved by PSU Project Manager.

B. Terminal unit shall be certified under the ARI Standard 880 certification program and carry the ARI Seal.

C. Terminal unit casing shall be minimum 22-guage galvanized steel, internally lined with insulation, sealant shall be applied at insulation edges to prevent entrainment of fibers in air stream.

D. Dampers shall be heavy gauge steel with, self-lubricating bearings shall be specified for fan terminal units. Nylon bearings are not acceptable.

E. Damper shaft shall be clearly marked on the end to indicate damper position, damper shall incorporate a mechanical stop to prevent over stroking.

F. At an inlet velocity of 2000 fpm, the minimum static pressure required to operate any terminal unit shall not exceed 0.13-inch WG.

G. No flex on the inlet of a terminal box.

H. Provide working clearances around terminal unit and piping components.

I. Terminal Unit shall only be supported from building structure.

J. All air terminal units must have disconnect for fan powered units within line of sight of control panel.

K. Provide pipe kits, drain pan (when applicable) and flexible connections to re-heat coil. Condensate pipe shall be copper that is a properly sloped to drain. No quick connect fittings. Fan powered terminal units that are equipped with a cooling coil shall have a stainless steel drain pan which drains to a code approved location.

L. Terminal units shall be labeled at drop ceiling.

M. Provide fume hood exhaust, general exhaust, and supply air when air terminal units are installed in a lab environment. Chemical applications need to be stainless steel.

N. All entering and leaving ductwork shall meet manufacturer's requirement to reduce turbulence and allow accurate measurement and control.

O. Fan powered terminal units shall be equipped with a filter bank where accessible in filter area.

2.4 DUCTWORK

A. All ductwork shall be manufactured and installed per SMACNA standards.

B. Seal joints and reinforce ducts to prevent buckling, vibrations, and unnecessary noises. Fabricate ductwork in order to eliminate all sharp corners.

C. Fabricate and install ductwork fittings with the least amount of pressure drop.

D. Duct systems constructed using duct board will not be accepted.

E. Use Pittsburg clamping system or as approved by PSU Project Manager.

F. Flex duct longest lengths shall be 5 feet prior to termination at diffuser.

G. Ductwork used to exhaust chemical fume hoods and special exhaust systems must be welded and stainless steel or PVC coated.

H. Supply air and general exhaust ductwork shall be galvanized steel.

I. The Contract Documents shall require that new duct systems are cleaned and inspected for cleanliness prior to energizing air-handling equipment.

J. Label all ductwork based on its service (e.g. supply air, return air, hazardous exhaust, general exhaust, etc.).

K. At the beginning of any remodeling work, cover all return air grilles with filtering material to prevent accumulation of dust in existing duct system.

L. If duct work is installed but not in use, it shall be temporally sealed for protection.

2.5 VARIABLE FREQUENCY DRIVES (VFD) AND MOTORS

A. Manufacturers:
   1. Danfoss VFDs: ABB or as approved by PSU Project Manager.
   2. Motors: Baldor or as approved by PSU Project Manager.

B. VFDs shall have no bypass and be enclosed in NEMA 3R rated waterproof enclosure if installed outside.

C. Motors shall be high efficiency, inverter duty rated, and must have shaft grounding provided by factory when a VFD is installed.

D. Perform an AMP draw after installation, results shall be included in start-up report and reported to owner.

E. Install disconnect within line of sight of VFD.

F. Design equipment so that load does not cause motor to run in its service factor. Maximize amperage of motor.

G. If replacing a motor, stay within engineering limits of the equipment.

H. Motor must be high efficiency and waterproof if in an exterior location.

I. Bearings to be serviceable, accessible, and grease-able.

J. Do not install disconnect on the load side of the VFD. Line and load side shall be in separate raceways.

2.6 SPECIALIZED EXHAUST SYSTEMS

A. Manufacturer:
   1. Lab Exhaust: Greenheck, Strobic Air, or as approved by PSU Project Manager.

B. Fans exhausting laboratory fumes shall be designed as such and shall provide high velocity discharge that sends plume into atmosphere.

C. Exhaust fans shall be designed to exhaust the required media (e.g. kitchen/grease fumes, paint fumes, etc.). Fan material and components shall be spark proof when applicable.

D. All laundry exhaust systems shall be installed with lint filter and constructed per Oregon Mechanical code.

E. All exhaust systems for painting application shall be installed with industry standard paint booth and specialized HVAC system.

F. Wood shops shall be equipped with appropriate dust collection system, specialized exhaust system, and fire suppression requirements.

G. All specialized exhaust fans shall be controlled, monitored, and alarmed via building automation systems.

H. Obnoxious/ Smelly fumes shall be exhausted from building occupants and general public. Exhaust fan discharge shall be directed so that odors are not detected by occupants.

2.7 FUME HOODS

A. When there is more than one fume hood in a room, perform backflow verification test (i.e. if one fan shuts off ensure no backdraft).

B. New fume hoods shall be standard products from a manufacturer, acceptable to laboratory use, and specifically approved by the PSU Environmental Health and Safety. All fume hood designs should demonstrate containment of tracer gas less than 4.0 AM 0.05 according to ASHRAE Test Standard 110-1995. AIHA Z9.5-1995.

C. All hoods shall be equipped with sash stops on vertical rising sashes allowing the sash height to be set at 18 inches during routine use, unless otherwise advisable.

D. High performance fume hoods shall be used, unless otherwise advisable. High performance hoods shall have a 60 FPM face velocity at 18” sash height.
   1. In those cases where high performance fume hoods cannot be used, constant air volume hoods with bypass air openings shall be used. The bypass air opening shall progressively uncover as the sash is lowered to its lowest point.

E. New hoods should be mounted on a chemical storage cabinet made of noncorrosive material.

F. Interior fume hood surfaces shall be rigid, safe, and constructed of corrosion resistant, non-porous, non-combustible materials, appropriate for the intended use.

G. The interiors of hoods shall have smooth and impermeable interior surfaces with rounded corners. Interior surfaces shall be free of cracks and crevices to allow easy cleaning.

H. Laboratory hoods shall be provided with a means of containing spills.

I. A horizontal bottom airfoil inlet at the front of the hood shall be provided.

J. The rear and top interior of the hood shall be furnished with baffles to provide at least two, preferably three, slots. Baffles should be continuous.

K. A quantitative airflow sensor and an audible and visual alarm shall be permanently installed and located so that the display is visible to the user from the front of the fume hood.

L. Light fixtures shall be of LED and replaceable from outside of the hood. Light fixtures shall be displaced or covered by a transparent, impact resistant, vapor tight shield to prevent vapor contact. Hood lighting shall be provided by UL listed fixtures. If located within the hood interior, the fixtures shall meet the requirements of NFPA 70 (National Electrical Code) sections appropriate to hazardous atmospheres.

M. The valves, electrical outlets, and switches for utilities serving hoods shall be placed at readily accessible locations outside the hood. All shut-off valves shall be clearly labeled. Each new fume hood utilities shall have their own shut off valves prior to fume hood.

N. Plumbing (e.g., vacuum lines) should exit the sides of the fume hood and not the bench top.

O. Post instructions on how to use the hood per chemical requirements for enclosed spaces and fume hood manufacturer recommendations.

P. When cup sinks are provided they are to be integral to the fume hood and provided with backflow prevention. Cup sinks to drain to acid waste system.

Q. All fume hoods shall be labeled with local service representative.

R. All serviceable parts on a fume hood shall be accessible.

PART 3 - EXECUTION - NOT USED

END OF SECTION 233000

SECTION 23 70 00 - CENTRAL HVAC EQUIPMENT

PART 1 - GENERAL

1.1 SUMMARY

A. Related Sections
1. 23 00 00 Common Work & Misc.
2. 23 20 00 Piping and Pumps
3. Appendix 26.1 - Energy Conservation Guidelines

1.2 DESIGN AND PERFORMANCE REQUIREMENTS

A. Code
1. Ensure code required and adequate clearance for ease of accessibility to systems/equipment for repair, maintenance, or replacement.
2. All equipment to be installed per code and industry standard.

B. Sustainability
1. Mechanical room floors shall be protective, water resistant, and coated and sealed with a sustainable product.
2. All systems shall be designed to optimize energy efficiency, improve indoor environmental quality, and assist in achieving credits in the LEED rating system. Refer to Energy Conservation Guidelines (Appendix 26.1).

C. Documentation
1. Contractor shall provide required equipment data for PSU deferred maintenance software.
2. Provide written energy control procedures (provisions for lock-out tag-out) for any new equipment installation.
   a. When making modifications to existing equipment, require revisions to the written energy control procedures.

D. Outdoor & Roofing
1. For mechanical equipment located outdoors, the design shall provide features to facilitate winterization of such equipment.
2. If equipment is elevated off of roof, provide platform in order to meet code requirement for safe access and clearances. Exterior items should be constructed using hot dipped galvanized steel.
3. Equipment on roof should be located 15' from roof edge whenever feasible.
4. Equipment should be in heated enclosure when feasible.
5. Equipment placed outdoors shall be outdoor fire rated by the manufacturer and suitable for our local climate.

E. Other Requirements
1. All equipment to be commissioned upon completion of project.
2. Vibration and noise must be considered in design. Install systems where it causes the least disturbance. Otherwise use noise and/or vibration dampening.
3. Provide DDC controls and program into PSU building automation system (BAS) for all mechanical equipment.
4. Provide concrete housekeeping pads when applicable.
5. Ensure that replacement parts and components are available locally.
6. All standalone HVAC systems at a minimum are required to be monitored by PSU's Building Automation System.
7. HVAC units with a cooling capacity of greater than 10 tons shall not be physically located above a drop suspended ceiling, especially in offices.

PART 2 - PRODUCTS

2.1 CENTRAL HEATING EQUIPMENT

A. Condensing and Heating Boilers

1. Manufacturer: RayPak, Cleaver-Brooks, Aerco, AO Smith, Bradford White, Adcanced Thermal Hydronics Lochinvar, KN, Weil-McLain (steam only) or as approved by PSU Project Manager.
2. When applicable, review design with boiler inspector. Contractor is required to provide final boiler permit and inspections from boiler inspector and a city mechanical inspector when applicable.
3. For domestic water heating, install separate back up electric hot water heater system when steam domestic hot water heater is the existing source.
4. For condensing boilers, a condensate neutralization station to be provided and piped to appropriate drain.
5. Provide isolation pad between concrete and boiler to prevent electrolysis.
6. Condensing boilers shall be piped reverse return for multi-unit installations.
7. Boilers need to be UL listed and stamped accordingly.
8. Boilers shall be equipped with a dedicated city water make-up with gate valve in order to fill up boilers quickly.
9. Boilers shall be installed with hose bib in order to drain down.
10. Provide seismic restraint/anchorage per structural engineer requirements.
11. Burners shall be high efficiency (85%-98% depending on application) and linkage-less when available.
12. Flues shall terminate above roof line and be provided with rain cap.
13. Operating pressure of all system components shall be consistent throughout (e.g. storage tanks, condensate tanks, expansion tanks, T&P valves, etc.).
14. Emergency electrical shut-off to be clearly labeled, red, and installed at the main point of egress. Provide cover.

B. Central Plant Boilers
1. Manufacturer: Cleaver Brooks, Hurst, Johnston, Burnham, Miura, or as approved by PSU Project Manager.
2. Boilers shall be UL listed and stamped accordingly. Boilers shall be constructed for 150 psi operation; actual operation shall be 15 psi.
3. Boiler shall be provided with economizer.
4. Boilers shall run off of natural gas and No. 2 oil.
5. Tubes shall be cleanable from either front or back of boiler.
6. OSHA-approved platforms and ladders shall be provided to access boiler.
7. Burners shall have a minimum standard efficiency of 85%. When available, burners shall be linkage-less and have a parallel positioning system.
8. Emergency electrical shut-off shall be clearly labeled red and installed at the main point of egress. Provide cover.
9. Boiler(s) to be provided with control panel which can be controlled via PSU BAS system.
10. Boiler shall be equipped with low NOx control, O2 trim system, and VFD on blower.
11. Central plant boilers shall operate in conjunction with a spray type de-aerator system. De-aerator tank shall be installed with magnesium rod to prevent corrosion.
12. Dirt separator shall be installed on central plant condensate return systems.
13. Wet-back design is preferred.
14. Boiler shall be seismically anchored per structural engineer's design.
15. In multiple boiler installations provide means to prevent carry over via the main steam header.
16. Chemical treatment equipment and program to meet PSU standards.
17. Pressure safeties shall be removable.

C. Heat Exchangers
1. Heat exchangers shall be properly rated for the flow and the media.
2. Shut-off valves shall be directly up/downstream of all inlets and outlets.
3. Provide isolation drain down valves.
4. Where possible, provide a hose bib and floor drain near plate and frame heat exchangers in order to clean and service.
5. Heat exchanger shall have strainer ahead of inlets that meets manufactures recommendations.

2.2 CENTRAL COOLING EQUIPMENT

A. Packaged Water Chiller
1. Manufacturer: Water Furnace, York, Daikin, Trane, Carrier, or approved equal.
2. Provide Glycol or heat trace and low ambient control for outdoor installations.
3. When viable, provide extended warranty on compressor.
4. Chemical treatment equipment and program shall meet PSU standards.
   a. See Section 23 20 00 Piping and Pumps - Chemical Treatment for additional information.
5. Packaged water chiller shall be provided for specialized purpose (e.g. academic research, server room cooling, etc.). Campus chilled water shall be used in all other cases and when available.

6. Authority having jurisdiction shall review and approve the use of domestic city water for cooling needs. If approved, this water shall be metered.

B. Central Plant Chiller
1. Manufacturer: Trane, McQuay/Daikin, Carrier, York, or as approved by PSU Project Manager.
2. Provide 10-year extended warranty on compressor.
3. Chemical treatment equipment and program to meet PSU standards
4. For large chillers, provide a jib crane, rail system, or other in order to provide maintenance to chiller.
5. A refrigerant Leak Detection System shall be required.
6. Refrigerant shall be specified to assist in achieving Energy and Atmosphere credits in the LEED rating system.
7. Provide adequate clearances in order to clean tubes on both ends of chiller.
8. Provide dirt/air separator.
   a. See Section 23 20 00 Piping and Pumps - Air & Dirt Separators.

C. Cooling Towers
1. Manufacturer: Evapco or as approved by PSU Project Manager.
2. Provide stainless steel basin construction. Supply sump heater for basin and heat trace if tower is in year round operation.
3. Make up water meter shall be provided, provide Carlon or approved equal.
4. Cooling tower to be provided with VFD and a vibration limit switch. Provide ultra-quiet fan operation accessory when noise is a consideration.
5. Provide side stream filter.
6. Provide fan guard, safety railings, and ladder from grade to fan deck.
7. Design access to the basin and means to pull the motor.
8. Prior to specifying chemical treatment systems, consult with PSU Project Manager.
   a. See Section 23 20 00 Piping and Pumps - Chemical Treatment for additional information.
9. Provide jib arm to pull the motor.
10. Cooling tower and cooling loop shall be designed to match chiller capacity.
11. Open towers shall be located external to buildings. Roof-mounted units are preferred

2.3 CENTRAL HVAC EQUIPMENT

A. Packaged Roof Top / Split System HVAC Units
1. Manufacturer: Trane, Carrier, York, Reznor, McQuay/Daikon, or as approved by PSU Project Manager.
2. Manufacturer (VRF Systems) : Daikon, Mitsubishi, LG or as approved by PSU project manager,
3. Split system and stand-alone condensers shall be tube and fin type.
4. Gas heat is preferred over electric strip heat.
5. Provide NEMA 3R enclosure for VFD's, electrical/controls components, control panels, etc.
6. Contractor shall provide required structural anchorage per structural engineer requirements. Provide vibration isolation in order to meet specified structural and/or noise/vibration criteria.
7. Provide walk-off pads around equipment on roof.
8. Roof curbs shall be pre-manufactured and provided by HVAC unit manufacturer.
9. Ensure that roof warranty will be maintained/adhered to.
10. Outside air intakes need to be provided with water guard and bird screen.
11. City of Portland design review requirements shall be considered during design.

B. Custom Air Handling Units
1. Manufacturer: Hunt Air, McQuay/Daikon, Trane, York, or as approved by PSU Project Manager.
2. Require close coordination between air handling unit manufacturer, structural engineer, mechanical engineer, electrical engineer, acoustical engineer, and architect to ensure that unit structural support and mechanical and electrical connections are fully covered and responsibilities are fully defined.
3. Units having arrays of multiple small fans are encouraged.
4. HVAC fans shall be high efficiency when applicable.
5. Allow clearances to pull shaft, motor, and other fan components.
6. A light and receptacle shall be provided in enclosure. For outdoor units, provide adequate lighting and access for service and maintenance needs.
7. Roof off of enclosure to shed water. Provide floor drain in enclosure and route to roof drain.
8. If AHU is shipped in multiple sections, provide water proof joints between sections.
9. For HVAC fans, provide pressure safety switch on discharge side of fan in order to protect equipment.
10. Provide heat recovery when viable.
11. Provide two position valves at all coils for shut-off. Control valves shall not be used for shut-off.
12. Provide signage at each access door into air handler that notifies personnel of potential safety hazard. Access door shall be lockable.

13. Provide filter bank. All filters shall be MERV 13 rating. Filters to be replaced prior to building turnover to PSU.
14. For AHU control dampers all shafts/linkages to be metal. No plastic parts.
15. For AHU's with heat wheels a bypass and bypass damper shall be provided.

PART 3 - EXECUTION - NOT USED

END OF SECTION 237000

SECTION 26 05 00 - COMMON WORK RESULTS FOR ELECTRICAL

PART 1 - GENERAL

1.1 GENERAL REQUIREMENTS

A. All new services are preferred to be 480/277V.

1.2 STANDARDS AND CODES

A. All work shall be performed per the current adopted National Electric Code (NEC/NFPA70) and current enforceable Oregon specialty codes.

B. All OCPD's shall be rated for the applicable KAIC. Minimum KAIC rating allowed in most installations shall be 22KAIC.

C. All low voltage power distribution transformers shall meet NEMA TP-1 at a minimum.

D. If a project requires a new or an altered existing piece of electrical distribution equipment such as Services, Switchboards, Distribution Boards, Panel Boards, Bussways, Load Centers, the design team is responsible to perform NFPA 70 requirements as it pertains to Arc Flash, Available Fault and TCC. PSU will require each requirement to be provided in electronic format (.dez, .dwg, & .pdf) and hard copy.

1.3 COORDINATION

A. An overcurrent protective device coordination study, arc flash study, and arc flash assessment is required for all new construction and major renovation. Studies and assessments shall reflect and match “as-built” conditions.

B. During the design process, design team to provide a true life-cycle cost of equipment if requested by PSU.

C. Provide written energization, de-energization, and testing electrical control procedures (provisions for lock-out tag-out) for any new equipment installation(s). Modifications to existing equipment require revisions to any written electrical control procedures.

D. Prior to performing any electrical work, the contractor is required to provide a safety plan and pre-task plan to PSU PM and PSU EH&S for review and approval.

PART 2 - PRODUCTS

2.1 GENERAL REQUIREMENTS

A. Where applicable in new construction, all new electrical distribution equipment shall allocate 20% spare capacity (electrically & physical space) for future growth. If 20% is not obtainable during design phase(s) contact PSU CPC.

B. Any new service shall have (1) adjustable Main OCPD, where applicable. The single main to have adjustable trip settings.

C. Defective or visibly damaged extension cords may not be used on campus.

2.2 BOXES, ENCLOSURES, AND CABINETS

A. Each device box shall have grounding pigtails.

B. Whenever possible, all junction boxes shall be readily accessible per NEC definition, labeled with circuit identifier and origin.

2.3 CONDUITS AND FITTINGS

A. Minimum conduit size for power circuits shall be 3/4 inch. Minimum conduit size for control wiring shall be 3/4 inch. Conduit crossing building expansion joints shall have expansion provision with grounding continuity.

B. All EMT fittings of set screw types shall be steel with recycled content.

C. MC Cable is allowed for branch wiring but not distribution from branch panels. Individual MC Cable runs shall be limited to 30 ft. in length. If there are other scenarios where MC Cable is being considered it shall be reviewed with PSU Project Manager and Electrical Maintenance Team.

2.4 ELECTRICAL DISTRIBUTION EQUIPMENT

A. Manufacturer: Eaton, Square D, or as approved by PSU Project Manager.

B. Sub-metering of main building switchgear is required. Provide connection to PSU building automation system. Sub-metering shall be considered for other pieces of electrical gear in which it provides coverage for large portions of the building.

C. For any transformer and switch enclosures, provide window to be located in the cabinet to allow for performance of infrared testing.

D. In certain cases, PSU will require double ended switch gear for the building's main 120V, 208/230V, and 460V/480V electrical infrastructure.

2.5 METERING

A. All new medium voltage distribution equipment, including transformers and switches (Fused or Non-Fused), that will be the owners maintenance responsibility, shall be equipped with PSU PM approved metering device(s). Metering components, beyond direct contact of energized voltage conductors (CTs, PTs), shall be housed in an integral metering compartment that easily and safely accessible of any electrical hazard(s).

2.6 GENERATORS

A. Manufacturer: MTU, Generac, CAT, Cummins, Kohler or as approved by Project Manager.

B. When installing a EPSS (Optional or Stand-by), the source shall be separately derived.

C. When installing a single (Optional or Stand-by) generator, provide a breaker at the generator. If multiple or parallel generators are being considered during design consult with PSU.

D. If generator is located in an interior space, that space shall be equipped with a CO monitor and alarmed via PSU's Building Automation System.

2.7 PANELS, BREAKERS, BOARDS, AND BUSSES

A. All electrical distribution busses and boards shall have copper (CU) bussing. AL plated busses are prohibited.

B. All circuit breakers shall be bolt-on type, where applicable.

C. Hardpipe is required exiting all panel boards.

D. For new buildings and major remodels, install full size panel equipped with 42 circuit breakers at a minimum.

E. Electrical panels located in public space shall be built so it can be secured with a lock.

F. All new panels shall have the outer cover be hinged.

G. Preference is for all new panels to be installed in such a way that they can be de-energized without de-energizing other panels and in such a way that no energy enters the panel.

2.8 TRANSFER SWITCHES

A. Manufacture: ASCO, Eaton or as approved by Project Manager.

B. For emergency systems, design to match generator demand load, in compliance with NFPA guidelines.

C. For medium voltage infrastructure, design to meet building load(s). Ideally, transfer shall be seamless, with no power bumps. Consult with PSU.

D. All transfer switch status shall be wired into PSU building automation system.

E. Provide automatic transfer switches with maintenance bypass isolation.

2.9 TRANSFORMERS AND POWER SUPPLIES

A. AL wound transformers are prohibited.

2.10 WIREWAYS AND RACEWAYS

A. Encased ducts and raceways shall be rated for the type of installation.

B. Encased ducts and raceways shall be cited on plan drawings with dimensions.

2.11 WIRING DEVICES - RECEPTACLES, SWITCHES

A. Provide commercial grade receptacles in most cases. PSU maintains numerous types of buildings. If building type/space is not clear, contact PSU.

B. Provide commercial grade switches in most cases. PSU maintains numerous types of buildings. If building type/space is not clear, contact PSU.

C. Provide stainless steel covers/faceplates for new construction in most cases. PSU maintains numerous types of buildings. If building type/space is not clear, contact PSU.

D. For all medium voltage on PSU's 12.47 kV campus loop system, cabling partial discharge sensors shall be installed. At the conclusion of installation, a partial discharge report shall be provided.

E. Provide GFCI devices where required by code.

F. Provide AFCI devices where required by code.

G. Provide tamper resistant devices where required by code.

H. Provide WR rated devices where required by code.

I. A combination of circuit breakers and fuses within the same electrical distribution system is not permissible. An exception includes primary voltage services, MCC's, and UL classified fuses as required for time delay and limitation requirements of the application.

J. For feeders, copper wiring is preferred versus aluminum wiring. If aluminum wiring is being considered the design team / contractor team shall seek approval from PSU Project Manager and PSU Electrical maintenance teams.

PART 3 - EXECUTION

3.1 IDENTIFICATION

A. All devices, equipment, and material within the scope of work shall be affixed with a PSU approved permanent label identifying panel of origin and circuit number.

B. If a project requires an existing or a new piece of electrical distribution equipment such as Services, Switchboards, Distribution Boards, Panel Boards, Busways, Load Centers to be altered/installed, the design team is responsible to produce an updated warning/hazard labels to be applied to such equipment per current NFPA 70 & 70E.

C. If a warning/hazard label is required to be installed on an existing piece of equipment, contractor shall remove all other warning/hazardous labeling and apply new label on the front face of the specified piece of equipment. The only exception to this rule is if such equipment is in a common corridor/space. If contractor is unsure, contact PSU and submit an RFI.

3.2 INSTALLATION

A. Conduits feeding any branch shall have maximum of 40% fill.

B. All low voltage wiring (50V or less) shall be independently supported using appropriate pre-manufactured supports.

C. All electrical control equipment, including lighting control panels (master, satellite, and/or modules) shall not be installed above a finished classroom ceiling. If design/installation cannot meet this requirement, contact PSU CPC.

D. Proper ventilation and cooling shall be provided at locations where transformers are installed to prevent temperature in the room to rise above 75 degrees F.

E. All conduits shall be hidden in walls, floors, or ceilings where applicable.

F. During any construction that requires the use of electrical extension cords, GFCI protection must be in-line & in use, between the source and the load.

G. During installation of all electrical distribution equipment/components/devices the contractor is responsible to verify, test, record, and document that all conductive electrical connection points are properly secured and seated per manufacturers' recommendations. Completed installation should be free of all defect.

H. All equipment control wiring shall be installed in separate raceway from power wiring.

I. All electrical work to be performed within the scope of work shall only occur while all equipment is de-energized. Prior to any electrical work to be performed, the Electrical contractor is responsible to perform a site assessment of all energized electrical equipment within the same distribution system as it pertains to the scope of work. In certain situations, where existing facilities and systems lack documentation, the electrical contractor will be responsible to implement additional safety measures when performing electrical work, including but not limited to grounding straps, protective blast barriers, etc. If the electrical contractor cannot de-energize the equipment or system to perform the work, the electrical contractor is required to contact PSU PM.

J. Ceiling access panels shall be min. 2'x2' where deep ceiling access is required.

K. Unless approved by building official, routing new plumbing over electrical equipment is not allowed.

3.3 GROUNDING

A. Provide a complete grounding system design including any schematics, risers, and details. Specifications and drawings shall include detailed requirements (sizes, quantities, conduits, etc.) of the grounding system.
   1. Grounding design shall include main service, supplemental, and equipment grounding requirements. Specifying grounding requirements by referencing a code is prohibited.

3.4 REVIEW

A. Contractor(s), Designer(s) and Engineer(s) are responsible for addressing all design review comments to the satisfaction of PSU in order to assure the continued reliability of all power distribution systems.

END OF SECTION 260500

SECTION 26 05 53 - IDENTIFICATION FOR ELECTRICAL SYSTEMS

PART 1 - GENERAL

1.1 IDENTIFICATION

A. Provide label trim plates and install on all device covers.

B. Color-code for different systems and by voltage:
   1. Black, Red, Blue - 120/208
   2. Brown, Orange, Yellow - 277/480
   3. Gray, White – Neutral
   4. Orange – High-Leg Delta

C. Where a color system is in place, continue the same pattern as is.

D. Label all electrical distribution equipment such as switchgear, distribution, and panel boards to match plans (Phenolic Labels).

E. Provide and install schedules for all electrical distribution equipment such as Switchgear, Distribution, and panel boards.

F. All electrical distribution equipment enclosures, including disconnects, shall be affixed with a label identifying where that piece of equipment is being sourced from. The label should include name of source, type of source and location of source.

G. For new construction or major remodels, as applicable, all naming to follow table below:

ELECTRICAL EQUIPMENT LABELING IDENTIFICATION							
Facility Identifiers		Source Type	Voltage (kV)	Equipment Type	Level / Floor	RowColumn (AlphaNumber)	Series
Campus	Building	:N (Normal) :E (Emergency) :U (Uninter-rupted) :S (Stand-By) :L (Loop)	:6 (12.47) :4 (0.48) :D (0.24) :2 (0.208)	:S (SWGR/Bldg Service) :B (Distribution Board) :P (Panel Board) :L (Load Center) :W (Bussway) :U (UPS) :X (Transformer) :V (VFD/ASD) :M (Motor Con-trol Centr) :A (ATS [A] MTS [M])	:01 (Sub Basement) :0 (Basement) :1 (First Floor) :2 (Second Floor) :3 (Third Floor) :4 (Fourth Floor) :M (Mezzanine) :R (Roof)	:D2 (Row D Column 2)	:-A :-B :-C
XCXP	CLSB- HGCD- NASC- CHXP- ABXP- SBAP-						

EXAMPLE
In Cramer Hall locating a distribution board, panel board and transformer
>400A Distribution board is on the first floor at row A and column 1, Emergency source of 480V would be :CHXP-E4B1A1
A second sub-fed 400A panel board, normal power, 208V, located on third floor, row 6 column B would be :CHXP-N2P386-B
A 45kVA, 480-208/120 xfmr sourced by UPS power, located in sub-basement at row F, column 5 would be :CHXP-U4X01FS

PART 2 - PRODUCTS - Not Used

PART 3 - EXECUTION - Not Used

END OF SECTION 260553

SECTION 26 50 00 - LIGHTING

PART 1 - GENERAL

1.1 GENERAL REQUIREMENTS

A. Daylighting shall be the primary lighting strategy with electric lighting supplementing, where applicable and feasible.

B. Daylight sensors shall be installed to control light fixtures where applicable and feasible.

C. Provide schematics, schedules, relay (sizes & quantities), and clear intent for all lighting controls as applicable.

D. Occupancy sensors for lighting are required in all areas where appropriate according to use patterns.

E. All new lighting shall be LED.

F. New and replacement lighting fixtures shall be sourced locally so replacement parts can be easily acquired.

1.2 STANDARDS AND CODES

A. All lighting installations must meet or exceed Oregon Energy Code.

B. All mounting heights shall be per ADA standards.

C. All new lighting shall be UL or approved equal, listed.

PART 2 - PRODUCTS

2.1 INTERIOR LIGHTING FIXTURES

A. Indirect LED is preference.

B. Whenever allowable, replace or retrofit existing fluorescent and incandescent lighting with LED.

C. When approved for installation, all LEDs to meet a minimum measured CRI value of 80 and a minimum measured CCT value of 3500K as applicable to the use and function of the space.

D. Preferred models for interior Lighting:
1. Lithonia CPX LED Panels for new 2x4, 2x2, and 1x4 fixtures.
2. Lithonia BLTR Relight Series for retrofitted 2x4, 2x2, and 1x4 fixtures.
3. As approved equal by Project Manager.

2.2 LIGHTING CONTROL DEVICES

A. Manufacturer: nLight.

B. Local occupancy sensors are required. Ceiling mounted is preferred.

C. Segregate zones/areas as small as suites or rooms.

2.3 NETWORKING LIGHTING CONTROLS

A. Manufacturer: nLight.

B. Design for daylight harvesting.

2.4 EXTERIOR LIGHTING AND LIGHT POLES

A. Reference Light Pole cut sheet below for PSU Light Pole standard. New light pole assembly shall comply with the City of Portland Standards as it relates to the required lighting output. (See light post cut sheet below)

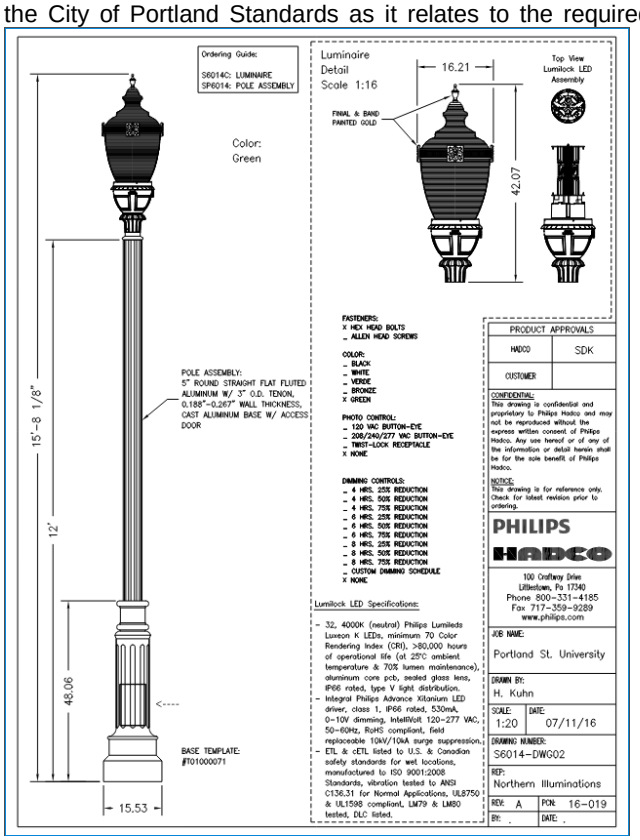

Figure 1: Detailed figure of a lamp post

B. LED Lamps are required for new light poles, Lumecon LROF or approved equal.

C. All exterior color temperature shall be 3000K, or lower if approved by Project Manager.
1. LROF-4-1-OW-A-CL-9-X-X-X-CC-X-X-P
2. Custom Color: Dark Green: PCT40140

D. All projects should consider areas where light levels can be improved, particularly along major exterior routes that do not have adequate light levels for nighttime circulation

E. Preferred models for exterior wall mounted lighting:
1. Lithonia WDGE LED 2", 4", or 6".
2. As approved equal by Project Manager.

F. Uplighting of any kind is not allowed.

PART 3 - EXECUTION

3.1 INSTALLATION

A. Exterior lighting fixtures shall be WET-LISTED watertight and shall have vandal-proof bases. For poles up to 15-20' high, hinged poles are preferred. All poles should meet, at a minimum, any seismic anchoring/bracing requirements. Exterior lighting fixtures shall have heavy-duty guards.

B. Fixture covers shall be UL-approved and regularly manufactured.

C. Select consistent fixtures and lamps for use throughout buildings. Minimize models, types, and systems.

D. LED Fixtures to have electronic devices. Select items that are not going to become obsolete or difficult to obtain shortly after turnover to PSU.

E. Interior High Output Fixtures must have accessible LED drivers.

F. When high light fixtures in auditoriums and gyms are used, consideration must be given to access, maintenance, and serviceability.

G. Place power packs for switching in maintenance accessible-friendly locations. These items are best located directly above banks of light switches, or in electrical rooms when feasible.

END OF SECTION 265000

SECTION 27 05 00 - COMMON WORK RESULTS FOR COMMUNICATIONS

PART 1 - GENERAL

1.1 RELATED DOCUMENTS

A. Drawings and general provisions of the Contract, including General and Supplementary Conditions and Division 01 Specification Sections, apply to this Section.

1.2 SUMMARY

A. Section Includes: General communications requirements for Division 27 work and is supplemental to the requirements in Division 1.

B. The purpose of these division 27 specifications is to provide clear direction to consultants and installers performing communications work for Portland State University in regards to design, installation, and testing of a fully operational communications system.

C. OTHER IT equipment such as switches, routers, servers, access points, voice gateways and telephones - All purchasing and deployment of data and voice network equipment must be coordinated with and approved by PSU's Office of Information Technology. These components are NOT included in the Summary of work for these Division 27 specifications.

D. The telecommunications network transport system shall provide a cost effective standards based infrastructure that is capable of supporting current and future voice, video, and data applications over a common system. The system shall support, at a minimum:
1. 1000Base-T, horizontal
2. 1000Base-TX, horizontal
3. 10GBase-x, backbone

1.3 DEFINITIONS

A. ARC: Aluminum rigid conduit.

B. BCT: Bonding conductor for telecommunications.

C. BICSI: Building Industry Consulting Service International.

D. Consolidation Point: A location for interconnection between horizontal cables extending from building pathways and horizontal cables extending into furniture pathways.

E. Cross-Connect: A facility enabling the termination of cable elements and their interconnection or cross-connection.

F. EMI: Electromagnetic interference.

G. EMT: Electrical metallic tubing.

H. GRC: Galvanized rigid steel conduit.

I. IDC: Insulation displacement connector.

J. IMC: Intermediate metal conduit.

K. Inter-building Backbone cable: UTP, optical fiber, and coaxial cable that connects telecommunications rooms that are in separate buildings.

L. Intra-building Backbone cable: UTP, optical fiber, and coaxial cable that connects telecommunications rooms that are within the same buildings.

M. LAN: Local area network.

N. MUTOA: Multiuser telecommunications outlet assembly, a grouping in one location of several telecommunications outlet/connectors.

O. OIT: Office of Information Technology. A PSU entity.

P. Outlet/Connectors: A connecting device in the work area on which horizontal cable or outlet cable terminates.

Q. Owner: Portland State University

R. PSU: Portland State University. Also referred to and used synonymously with the “owner”.

S. RCDD: Registered Communications Distribution Designer.

T. TBB: Telecommunications Bonding Backbone

U. TC: Telecommunications Closet. Term generally used by PSU. Synonymous with and can be used interchangeably with TR.

V. TGB: Telecommunications grounding busbar. Term used synonymously with BCT.

W. TMGB: Telecommunications main grounding busbar.

X. TR: Telecommunications Room. Synonymous with and can be used interchangeably with TC.

Y. UTP: Unshielded twisted pair.

1.4 STANDARDS AND CODES

A. Telecommunications design and installations shall adhere with industry standards, including but not limited to:
1. NFPA-70, National Electrical Code
2. NFPA-72, National Fire Alarm and Signaling Code
3. BICSI Telecommunications Distribution Methods Manual (TDMM), 13th Edition
4. ANSI/TIA/568-C: Generic Telecommunications Cabling for Customer Premises
5. ANSI/TIA/568-C: Commercial Building Telecommunications Cabling Standard
6. ANSI/TIA/568-C: Commercial Building Telecommunications Cabling Standard, Part 2: Balanced Twisted Pair Cabling
7. ANSI/TIA/568-C: Family of Standards, , June 2008
8. TIA-569-B: Commercial Building Standard for Telecommunications Pathways and Spaces
9. ANSI/TIA/EIA-598: Color Coding of Fiber Optic Cables
10. ANSI/TIA/EIA-606-A: The Administration Standard for the Telecommunications Infrastructure of Commercial Building
11. ANSI-J-STD-607-A-2002: Commercial Building Grounding and Bonding Requirements for Telecommunications
12. ANSI/TIA/EIA-758: Customer Owned Outside Plant Telecommunications Cabling Standard
13. ANSI/TIA/EIA-526-14-A-1998: Optical Power Loss Measurements of Installed Multimode Fiber Cable Plant-OFSTP-14A.

B. Comply with local AHJ codes and requirements in addition to these listed.

C. Above referenced standards are to be most current version published at the time specifications are issued, including addendums, and technical services bulletins.

1.5 ACTION SUBMITTALS

A. Product Data: For each type of product.
1. Include construction details, material descriptions, dimensions of individual components and profiles, and finishes for equipment racks and cabinets.
2. Include rated capacities, operating characteristics, electrical characteristics, and furnished specialties and accessories.

B. Shop Drawings:
   1. System Labeling Schedules: Electronic copy of labeling schedules, in software and format selected by PSU.
   2. System Labeling Schedules: Electronic copy of labeling schedules that are part of the cabling and asset identification system of the software.
   3. Cabling administration drawings and printouts.
   4. Wiring diagrams to show typical wiring schematics of each specified system.

C. Samples: Per specified system including but not limited to: Workstation outlets, jacks, jack assemblies, etc.

1.6 INFORMATION SUBMITTALS

A. Qualification Data: For Designer, Installer, qualified layout technician, installation supervisor, and field inspector.

B. Source quality-control reports.

C. Field quality-control reports.
   1. Basis for Certification: Indicate whether withstand certification is based on actual test of assembled components or on calculation.
   2. Dimensioned Outline Drawings of Equipment Unit: Identify center of gravity and locate and describe mounting and anchorage provisions.
   3. Detailed description of equipment anchorage devices on which the certification is based and their installation requirements.

D. Coordination Drawings: Floor plans and sections, drawn to scale, on which the following items are shown and coordinated with each other, using input from installers of the items involved:
   1. Include scaled cable tray layout and relationships between components and adjacent structural, electrical, and mechanical elements.
   2. Vertical and horizontal offsets and transitions.
   3. Clearances for access above and to side of cable trays.
   4. Vertical elevation of cable trays above the floor or below bottom of ceiling structure.
   5. Structural members in paths of pathway groups with common supports.
   6. HVAC and plumbing items and architectural features in paths of conduit groups with common supports.

E. Seismic Qualification Certificates: For cable trays, accessories, and components, from manufacturer.
   1. Basis for Certification: Indicate whether withstand certification is based on actual test of assembled components or on calculation.
   2. Dimensioned Outline Drawings of Equipment Unit: Identify center of gravity and locate and describe mounting and anchorage provisions.
   3. Detailed description of equipment anchorage devices on which the certification is based and their installation requirements.

F. Delegated-Design Submittal, for seismic restraints:
   1. Seismic-Restraint Details: Signed and sealed by a qualified professional engineer, licensed in the state where Project is located, who is responsible for their preparation.
   2. Design Calculations: Calculate requirements for selecting seismic restraints.
   3. Detail fabrication, including anchorages and attachments to structure and to supported cable trays.

1.7 CLOSEOUT SUBMITTALS

A. Operation and Maintenance Data: For systems specified in each section.

B. Software and Firmware Operational Documentation:
   1. Software operating and upgrade manuals.
   2. Program Software Backup: On compact disk or posted to PSU Project Management application, complete with data files.
   3. Device address list.
   4. Printout of software application and graphic screens.

1.8 QUALITY ASSURANCE

A. Samples Installer Qualifications: Designer and Cabling Installer must have personnel certified by BICSI on staff.
   1. Layout Responsibility: Preparation of Design OR Shop Drawings and Cabling Administration Drawings by an RCDD.
   2. Installation Supervision: Installation shall be under the direct supervision of Registered Technician or Level 2 Installer, who shall be present at all times when Work of this Division is performed at Project site.
   3. Testing Supervisor: Currently certified by BICSI as an RCDD to supervise on-site testing.

B. Testing Agency Qualifications: An NRTL.
   1. Electrical Components, Devices, and Accessories: Listed and labeled as defined in NFPA 70, by a qualified testing agency, and marked for intended location and application.

C. Comply with NFPA 70.

1.9 PROJECT CONDITIONS

A. Environmental Limitations: Do not deliver or install cables and connecting materials until wet work in spaces is complete and dry, and temporary HVAC system is operating and maintaining ambient temperature and humidity conditions at occupancy levels during the remainder of the construction period.

1.10 COORDINATION

A. Coordinate layout and installation of telecommunications pathways and cabling with PSU's telecom department prior to installing and terminating.

1.11 SOFTWARE SERVICE AGREEMENT

A. Technical Support: Beginning with Substantial Completion, provide software support for two years.

B. Upgrade Service: Update software to latest version at Project completion. Install and program software upgrades that become available within two years from date of Substantial Completion. Upgrading software shall include operating system. Upgrade shall include new or revised licenses for use of software.
   1. Provide 30 days' notice to PSU to allow scheduling and access to system and to allow PSU to upgrade computer equipment if necessary.

PART 2 - PRODUCTS

2.1 SUBSTITUTION OF MATERIALS

A. Substitutions will not be considered except for products for which are specifically identified with an “or equal” following their description and/or part number.

B. Prior to bid opening: For those products where an or equal will be considered, acceptance will be determined through following process:
   1. Substitution Request form filled out in its entirety with reference to specific section and signature stating it meets or exceeds all performance requirements of originally specified product.
   2. Samples shall be submitted when requested.
   3. Requests shall be received 10 days prior to bid opening/due time.
   4. Requests containing insufficient information to confirm compliance with contract documents will not be considered.

C. Upon Award of Contract: Substitution of products will be considered after award of contract only under the following conditions:
   1. The contractor placed order for specified materials promptly after contract award and the specified products cannot be delivered to the project to meet PSU’s construction schedule.

2. The reason for the unavailability is beyond the contractor's control, i.e. due to strikes, bankruptcy, discontinuance of manufacturer, acts of God.
3. The specified product is no longer manufactured.
4. There is compelling economic advantage to PSU.
5. There is compelling sustainable or environmental advantage to PSU.

D. In all cases, should a substituted material result in communication system or building modifications, the contractor shall alone pay all cost to provide these modifications including all costs to the PSU's Representative and Architect for redesign, and updated of record drawings required to accommodate the required modifications.

PART 3 - EXECUTION

3.1 IDENTIFICATION

A. A note about e911: Oregon Senate Bill 598, implemented January 1 of 2014, requires organizations to report the physical street address of a 911 call to a Public Safety Answering Point (PSAP). PSU OIT must have accurate information on jack locations and labels in order to enter this physical information in our database to report for e911.

B. Identify system components, wiring, and cabling complying with TIA/EIA-606-A. Comply with requirements for identification specified in Section 270500, Common Work Results for Communications.
1. Administration Class: 2.
2. Color-code cross-connect fields. Apply colors to voice and data service backboards, connections, covers, and labels.

C. Using cable management system software specified in Part 2, develop Cabling Administration Drawings for system identification, testing, and management. Use unique, alphanumeric designation for each cable and label cable, jacks, connectors, and terminals to which it connects with same designation. At completion, cable and asset management software shall reflect as-built conditions.

D. Paint and label colors for equipment identification shall comply with TIA/EIA-606-A for Class 2 level of administration, including optional identification requirements of this standard.

E. Cable Schedule: Post in prominent location in each equipment room and wiring closet. List incoming and outgoing cables and their designations, origins, and destinations. Protect with rigid frame and clear plastic cover. Furnish an electronic copy of final comprehensive schedules for Project.

F. Cabling Administration Drawings: Show building floor plans with cabling administration-point labeling. Identify labeling convention and show labels for telecommunications closets, terminal hardware and positions, horizontal cables, work areas and workstation terminal positions, grounding buses and pathways, and equipment grounding conductors. Follow convention of TIA/EIA-606-A. Furnish electronic record of all drawings, in software and format selected by PSU.

G. Cable and Wire Identification:
1. Label each cable within 4 inches of each termination and tap, where it is accessible in a cabinet or junction or outlet box, and elsewhere as indicated.
2. Each wire connected to building-mounted devices is not required to be numbered at device if color of wire is consistent with associated wire connected and numbered within panel or cabinet.
3. Label each terminal strip and screw terminal in each cabinet, rack, or panel.
    a. Individually number wire conductors connected to terminal strips, and identify each cable or wiring group being extended from a panel or cabinet to a building-mounted device shall be identified with name and number of particular device as shown.
    b. Label each unit and field within distribution racks and frames.
4. Uniquely identify and label work area cables extending from the MUTOA to the work area. These cables may not exceed the length stated on the MUTOA label.

H. Labels shall be preprinted or computer-printed type with printing area and font color that contrasts with cable jacket color but still complies with requirements in TIA/EIA-606-A.
1. Cables use flexible vinyl or polyester that flex as cables are bent.

3.2 ACCESSIBILITY AND INSTALLATION

A. Confirm Accessibility and Installation requirements in Division 00, Division 01, and individual Division 27 sections.

B. Install equipment requiring access (i.e., amplifiers, taps, zone controllers, volume controls, and storage devices) so that they may be serviced, reset, replaced or recalibrated by service people with normal service tools and equipment. Do not install equipment in obvious passageways, doorways, scuttles or crawl spaces which would impede or block intended usage.

C. Install equipment and products complete as directed by manufacturer's installation instructions. Obtain installation instructions from manufacturer prior to rough-in of equipment and examine instructions thoroughly. When requirements of installation instructions conflict with Contract Documents, request clarification from PSU prior to proceeding with installation. This includes proper installation methods, sequencing and coordination with other trades and disciplines.

D. Confirm Firestopping requirements in Division 07. In absence of specific requirements, comply with individual Division 27 sections and the following:
   1. Firestopping:
      a. Coordinate location and protection level of fire and/or smoke rated walls, ceilings, and floors. When these assemblies are penetrated, seal around piping, ductwork and equipment with approved firestopping material. Install firestopping material complete as directed by manufacturer's installation instructions. Meet requirements of ASTM E814, Standard Test Method for Fire Tests of Through-Penetration Fire Stops.
      b. New or retrofitted firestop sleeves: Install re-enterable fire stop sleeves at all fire-rated wall penetrations.STI EZ-Path Series 44+, or approved equivalent.

E. Plenums:
   1. In plenums, provide plenum rated materials that meet the requirements to be installed in plenums. Immediately notify responsible party (PSU; Architect, or Engineer) of discrepancy.

3.3 REVIEW AND OBSERVATION

A. Confirm Review and Observation requirements in Division 00 and Division 01, and individual Division 27 sections.

B. Notify responsible party, in writing, at following stages of construction so that the responsible party may, at their option, visit site for review and construction observation:
   1. Underground conduit installation prior to backfilling.
   2. Prior to ceiling cover/installation.
   3. When main systems, or portions of, are being tested and ready for inspection by AHJ.
   4. Final Punch: Costs incurred by additional trips required due to incomplete systems will be the responsibility of the Contractor.

3.4 CONTINUITY OF SERVICE

A. Confirm requirements in Division 00 and Division 01. In absence of specific requirements, comply with individual Division 27 sections and the following:
   1. During remodeling or addition to existing structures, or addition of a structure to existing structure, while existing structure is occupied, current services to remain intact until new construction, facilities or equipment is installed.
   2. Prior to changing over to new service, verify that every item is thoroughly prepared. Install new wiring to point of connection.
   3. Coordinate transfer time to new service with PSU. If required, perform transfer during off peak hours. Once changeover is started, pursue to its completion to keep interference to a minimum.
      a. If overtime is necessary, there will be no allowance made by PSU for extra expense for such overtime or shift work.
   4. Organize work to minimize duration of power interruption.

3.5 CUTTING AND PATCHING

A. Confirm Cutting and Patching Requirements in Division 00 and Division 01. In absence of specific requirements, comply with individual Division 27 sections and the following:

1. Proposed floor cutting/core drilling/sleeve locations to be approved by project Structural Engineer. Submit proposed locations to Architect/Project Structural Engineer. Where slabs are of post tension construction, perform x-ray scan of proposed penetration locations and submit scan results including proposed penetration locations to Project Structural Engineer/Architect for approval. Where slabs are of waffle type construction, show column cap extent and cell locations relative to proposed penetration(s).
2. Cutting, patching and repairing for work specified in this Division including plastering, masonry work, concrete work, carpentry work, and painting included under this Section and will be performed by skilled craftsmen of each respective trade in conformance with appropriate Division of Work.
3. Additional openings required in building construction to be made by drilling or cutting. Use of jack hammer is specifically prohibited. Patch openings in and through concrete and masonry with grout.
4. Restore new or existing work that is cut and/or damaged to original condition. Where alterations disturb lawns, paving, and walks, surfaces to be repaired, refinished and left in condition matching existing prior to commencement of work.
5. Additional work required by lack of proper coordination will be provided at no additional cost to PSU.

3.6 EQUIPMENT SELECTION AND SERVICEABILITY

A. Replace or reposition equipment which is too large or located incorrectly to permit servicing, at no additional cost to PSU.

3.7 DELIVERY, STORAGE AND HANDLING

A. Confirm requirements in Division 00 and Division 01. In absence of specific requirements, comply with individual Division 27 sections and the following:
1. Handle materials delivered to project site with care to avoid damage. Store materials on site inside building or protected from weather, dirt and construction dust. Insulation and lining that becomes wet from improper storage and handling to be replaced before installation. Products and/or materials that become damaged due to water, dirt and/or dust as a result of improper storage must be replaced before installation.
2. Protect all equipment and conduit to avoid damage. Close conduit openings with caps or plugs. Keep motors and bearings in watertight and dustproof covers during entire course of installation.

3.8 DEMONSTRATION

A. Confirm Demonstration requirements in Division 00 and Division 01, and individual Division 27 Sections.

B. Upon completion of work and adjustment of equipment and test systems, demonstrate to PSU's Representative, Architect and Engineer that equipment furnished and installed or connected under provisions of these Specifications functions in manner required. Provide field instruction to PSU's Maintenance Staff as specified in Division 01, Section 27 00 00 and individual Division 27 sections.

C. Manufacturer's Field Services: Furnish services of a qualified person at time approved by PSU, to instruct maintenance personnel, correct defects or deficiencies, and demonstrate to satisfaction of PSU that entire system is operating in satisfactory manner and complies with requirements of other trades that may be required to complete work. Complete instruction and demonstration prior to final job site observations.

3.9 CLEANING

A. Confirm Cleaning requirements in Division 01, and individual Division 27 Sections.

B. Upon completion of installation, thoroughly clean exposed portions of equipment, removing temporary labels and traces of foreign substances. Throughout work, remove construction debris and surplus materials accumulated during work.

3.10 INSTALLATION

A. Confirm Installation requirements in Division 00 and Division 01, and individual Division 27 sections.

B. Install equipment and devices in accordance with manufacturer's installation instructions, plumb and level and firmly secured to mounting surfaces. Maintain manufacturer's recommended clearances.

C. Start up equipment, in accordance with manufacturer's start-up instructions, and in presence of manufacturer's representative. Test operation and demonstrate compliance with requirements. Replace damaged or malfunctioning equipment.

D. Provide miscellaneous supports/metals required for installation of equipment.

3.11 PAINTING

A. Confirm Painting requirements in Division 01 and Division 09. In absence of specific requirements, comply with individual Division 27 sections and the following:
   1. Ferrous Metal: After completion of communications work, thoroughly clean and paint exposed supports constructed of ferrous metal surfaces in telecommunications rooms, i.e., hangers, hanger rods, equipment stands, with one coat of black asphalt varnish for exterior or black enamel for interior suitable for hot surfaces.
   2. In a telecommunications room, on roof or other exposed areas, equipment not painted with enamel to receive two coats of primer and one coat of rustproof enamel, colors as selected by Architect.
   3. See individual equipment Specifications for other painting.
   4. Structural Steel: Repair damage to structural steel finishes or finishes of other materials damaged by cutting, welding or patching to match original.
   5. Conduit: Clean, primer coat and paint interior conduit exposed in finished areas with two coats paint suitable for metallic surfaces. Color selected by Architect.
   6. Covers: Covers such as manholes, vaults and the like will be furnished with finishes which resist corrosion and rust.
   7. For fire-resistant plywood, do not paint over manufacturer's label.

3.12 ACCESS PANELS

A. Confirm Access Panel requirements in Division 01. In absence of specific requirements, comply with individual Division 27 sections and the following:
   1. Coordinate locations/sizes of access panels with Architect prior to work.

3.13 DEMOLITION

A. Confirm requirements in Division 01 and Division 02. In absence of specific requirements, comply with individual Division 27 sections and the following:
   1. Scope:
      a. It is the intent of these documents to provide necessary information and adjustments to communications systems required to meet code and accommodate installation of new work.
      b. Coordinate with PSU so that work can be scheduled not to interrupt operations, normal activities, building access or access to different areas.
      c. Existing Conditions: Determine exact location of existing utilities and equipment before commencing work. Compensate PSU for damages caused by failure to exactly locate and preserve underground utilities. Replace damaged items with new material to match existing. Promptly notify PSU if utilities are found which are not shown on Drawings.
   2. Equipment: Unless otherwise directed, equipment, fixtures, or fittings being removed as part of demolition process are PSU's property. Remove other items not scheduled to be reused or relocated from job site as directed by PSU.
   3. Unless specifically indicated on Drawings, remove exposed, unused raceways behind finished surfaces (floor, walls, ceilings, etc.). Cap raceways and patch surfaces to match surrounding finish.
   4. Unless specifically indicated on Drawings, remove unused equipment, electrical boxes, fittings and connectors. Removal is to be to a point behind finished surfaces (floors, walls, and ceilings).
   5. Examination:
      a. Determine exact location of existing utilities and equipment before commencing work, compensate PSU for damages caused by failure to locate and preserve utilities. Replace damaged items with new material to match existing.
      b. Verify that abandoned wiring and equipment serve only abandoned facilities.
      c. Demolition Drawings are based on casual field observation and existing record documents.
         1) Verify accuracy of information shown prior to bidding and provide such labor and material as is necessary to accomplish work.

2) Verify location and number of communications outlets, racks, panels, etc. in field.

d. Report discrepancies to Architect before disturbing existing installation.

6. Promptly notify PSU if utilities are found which are not shown on Drawings.

7. Execution:

a. Remove existing connectors, back boxes, wall plates and other communications equipment and devices and associated wiring from walls, ceilings, floors, and other surfaces scheduled for remodeling, relocation, or demolition unless shown as retained or relocated on Drawings.

b. Provide temporary wiring and connections to maintain communications continuity of existing systems during construction. Remove or relocate communications boxes, conduit, wiring, equipment, and the like, as encountered in removed or remodeled areas in existing construction affected by this work.

c. Remove and restore cable which serves usable existing outlets clear of construction or demolition.

d. If existing junction boxes will be made inaccessible, or if abandoned outlets serve as feed through boxes for other existing communications equipment which is being retained, provide new conduit and cable to bypass abandoned outlets.

e. If existing conduits pass through partitions or ceiling which are being removed or remodeled, provide new conduit and cable to reroute clear of construction or demolition and maintain service to existing equipment. If these are conduits which require a new cable home run, e.g. telecom cable, request clarification from Architect or Engineer prior to proceeding with demo.

f. Extend cable slack and devices in existing walls to be furred out.

g. Remove abandoned cable to originating telecom room.

h. Remove exposed abandoned conduit, including abandoned conduit above accessible ceiling finishes. Cut conduit flush with walls and floors, and patch surfaces.

i. Disconnect abandoned outlets and remove devices. Remove abandoned outlets if conduit servicing them is abandoned and removed. Provide blank cover for abandoned outlets which are not removed.

j. Disconnect and remove abandoned panelboards and distribution equipment.

k. Maintain access to existing communications installations which remain active. Modify installation or provide access panel as appropriate.

l. Existing communications outlets and devices are indicated on technology demolition plans. Verify exact location and number of existing communications outlets and devices in field. Only partial existing communications shown. Locations of items shown on Drawings as existing are partially based on Record and other Drawings which may contain errors. Verify accuracy of information shown prior to bidding and provide such labor and material as is necessary to accomplish intent of Contract Documents.

m. Remove abandoned cable to leave site clean.

B. Protection of Existing Equipment: Maintain existing system in service until new system is complete and ready for service. Existing and active networking and telecommunications hardware installed in PSU campus buildings shall be protected prior to the start of any construction. It shall be Contractor's responsibility to effectively protect the owner's network and telecommunications facilities, equipment, and materials from dust, dirt and any other damage during construction. Contractor shall take no action that will interfere with, or interrupt, existing building network and telecommunications services unless previous arrangements have been made with PSU's Telecom Department (oit-ts-requests@pdx.edu) or the appropriate building owner's representative. If any shutdown of network or telecommunications services or systems is required for Contractor to perform work, Owner's personnel will perform shutdown of affected systems. Contractor must provide Owner with a minimum of three (3) days' advance notice for such system shutdowns. Should Contractor cause network or telecommunications services or systems to be interrupted in any way, Contractor shall be solely responsible for all costs associated with satisfactorily restoring or replacing services or systems to include all labor and materials required to restore or replace services or systems. All service or system restoration or replacement by Contractor must be approved by PSU OIT.

3.14 ACCEPTANCE

A. Confirm requirements in Division 00 and Division 01. In absence of specific requirements, comply with individual Division 27 sections and the following:

1. System cannot be considered for acceptance until work is completed and demonstrated to Architect that installation is in strict compliance with Specifications, Drawings and manufacturer's installation instructions, particularly in reference to following:

a. Testing Reports

b. Cleaning

c. Operation and Maintenance Manuals

d. Training of Operating Personnel

e. Record Drawings

f. Warranty and Guaranty Certificates, including extended manufacturer's warranties.
g. Start-up/test Documents and Commissioning Reports

3.15 FIELD QUALITY CONTROL

A. Confirm Field Quality Control requirements in Division 00 and Division 01, Section 270000 and individual Division 27 sections.

B. Tests:
1. Conduct tests of equipment and systems to demonstrate compliance with requirements specified. Reference individual Specification Sections for required tests. Document tests and include in Operation and Maintenance Manuals.
2. During site evaluations by Architect or Engineer, provide an electrician with tools to remove and replace trims, covers, and devices so that proper evaluation of installation can be performed.

3.16 LETTER OF CONFORMANCE

A. Provide Letter of Conformance and copies of manufacturers' warranties and extended warranties with a statement that fire suppression items were installed in accordance with manufacturer's recommendations, UL listings and FM Global approvals. Include Letter of Conformance and copies of manufacturers' warranties and extended warranties in Operation and Maintenance Manuals.

END OF SECTION 270500

SECTION 27 05 26 - GROUNDING AND BONDING FOR COMMUNICATION SYSTEMS

PART 1 - GENERAL

1.1 RELATED DOCUMENTS

A. Drawings and general provisions of the Contract, including General and Supplementary Conditions and Division 01 and Division 27 Specification Sections, apply to this Section.

1.2 SUMMARY

A. Section Includes:
1. Grounding conductors.
2. Grounding connectors.
3. Grounding busbars.
4. Grounding labeling.

1.3 DEFINITIONS

A. See 270500, Common Work Results for Communications.

B. TMGB: Telecommunications Main Ground Busbar

C. TGB: Telecommunications Grounding Busbar

D. TBB: Telecommunications Bonding Backbone.

1.4 ACTION SUBMITTALS

A. Comply with submittal requirements in Section 270500, Common Work Results for Communications.

B. Shop Drawings: For communications equipment room signal reference grid. Include plans, elevations, sections, details, and attachments to other work.

1.5 INFORMATIONAL SUBMITTALS

A. Comply with submittal requirements in Section 270500, Common Work Results for Communications.

B. As-Built Data: Plans showing as-built locations of grounding and bonding infrastructure, including the following:
1. Ground and roof rings.
2. BB, TMGB, TGBs, and routing of their bonding conductors.

1.6 CLOSEOUT SUBMITTALS

A. Operation and Maintenance Data: For grounding to include in emergency, operation, and maintenance manuals.
1. In addition to items specified in Section 017823 "Operation and Maintenance Data," include the following:
a. Result of the ground-resistance test, measured at the point of TBB connection.
b. Result of the bonding-resistance test at each TGB and its nearest grounding electrode.

1.7 QUALITY ASSURANCE
1. Comply with requirements of Quality Assurance in 270500.

PART 2 - PRODUCTS

2.1 SYSTEM COMPONENTS

A. Comply with J-STD-607-A.

2.2 CONDUCTORS

A. Insulated Conductors: Stranded copper wire, green or green with yellow stripe insulation, insulated for 600 V.
   1. TBB: No. 3/0 AWG.
   2. Bonding Jumpers: No. 6 AWG.
   3. Cable Tray Equipment Grounding Wire: No. 6 AWG.

2.3 CONNECTORS

A. Products: Subject to compliance with requirements, provide one of the following:
   1. Chatsworth Products, Inc.
   2. Panduit Corp.

B. Compression Wire Connectors: Crimp-and-compress connectors that bond to the conductor when the connector is compressed around the conductor. Comply with UL 467.

C. Signal Reference Grid Connectors: Combination of compression wire connectors, access floor grounding clamps, bronze U-bolt grounding clamps, and copper split-bolt connectors, designed for the purpose.

D. Busbar Connectors: Cast silicon bronze, solderless compression or exothermic-type, mechanical connector; with a long barrel and two holes spaced on 5/8- or 1-inch centers for a two-bolt connection to the busbar.

2.4 GROUNDING BUSBARS

A. Products: Subject to compliance with requirements, provide one of the following:
   1. Chatsworth Products, Inc.
   2. Panduit Corp.

B. TMGB: Predrilled, wall-mounted, rectangular bars of hard-drawn solid copper, 1/4 by 4 inches in cross section, 20-inch length. The busbar shall be NRTL listed for use as TMGB and shall comply with J-STD-607-A.
   1. Predrilling shall be with holes for use with lugs specified in this Section.
   2. Mounting Hardware: Stand-off brackets that provide a 4-inch clearance to access the rear of the busbar. Brackets and bolts shall be stainless steel.
   3. Stand-off insulators for mounting shall be Lexan or PVC. Comply with UL 891 for use in 600-V switchboards, impulse tested at 5000 V.

C. TGB: Predrilled rectangular bars of hard-drawn solid copper, 1/4 by 2 inches in cross section, 12-inch length. The busbar shall be for wall mounting, shall be NRTL listed as complying with UL 467, and shall comply with J-STD-607-A.
   1. Predrilling shall be with holes for use with lugs specified in this Section.
   2. Mounting Hardware: Stand-off brackets that provide at least a 2-inch ((50-mm) clearance to access the rear of the busbar. Brackets and bolts shall be stainless steel.)
   3. Stand-off insulators for mounting shall be Lexan or PVC. Comply with UL 891 for use in 600-V switchboards, impulse tested at 5000 V.

2.5 LABELING

A. Products: Subject to compliance with requirements, provide one of the following:
   1. Brother International Corporation.
   2. HellermannTyton.
   3. Panduit Corp.

B. Comply with TIA/EIA-606-A and UL 969 for a system of labeling materials, including label stocks, laminating adhesives, and inks used by label printers.

C. Adhesive Film Label with Clear Protective Overlay: Machine printed, in black, by thermal transfer or equivalent process. Minimum letter height shall be 3/8 inch. Overlay shall provide a weatherproof and UV-resistant seal for label.

PART 3 - EXECUTION

3.1 EXAMINATION

A. Examine the ac grounding electrode system and equipment grounding for compliance with requirements for maximum ground-resistance level and other conditions affecting performance of grounding and bonding of the electrical system.

B. Inspect the test results of the ac grounding system measured at the point of TBB connection.

C. Prepare written report, endorsed by Installer, listing conditions detrimental to performance of the Work.

D. Proceed with connection of the TBB only after unsatisfactory conditions have been corrected.

3.2 INSTALLATION

A. Bonding shall include the utility power service entrance, the communications cable entrance, and the grounding electrode system. The bonding of these elements shall form a loop so that each element is connected to at least two others.

B. Comply with NECA 1.

C. Comply with J-STD-607-A.

3.3 APPLICATION

A. Conductors: Install solid conductor for No. 8 AWG and smaller and stranded conductors for No. 6 AWG and larger unless otherwise indicated.
   1. The bonding conductors between the TGB and structural steel of steel-frame buildings shall not be smaller than No. 6 AWG.
   2. The bonding conductors between the TMGB and structural steel of steel-frame buildings shall not be smaller than No. 6 AWG.

B. Underground Grounding Conductors: Install bare copper conductor, No. 2 AWG minimum.

C. Conductor Terminations and Connections:
   1. Pipe and Equipment Grounding Conductor Terminations: Bolted connectors.
   2. Underground Connections: Welded connectors except at test wells and as otherwise indicated.
   3. Connections to Ground Rods at Test Wells: Bolted connectors.
   4. Connections to Structural Steel: Welded connectors.

D. Conductor Support:
   1. Secure grounding and bonding conductors at intervals of not less than 36 inches.

E. Grounding and Bonding Conductors:
   1. Install in the straightest and shortest route between the origination and termination point, and no longer than required. The bend radius shall not be smaller than eight times the diameter of the conductor. No one bend may exceed 90 degrees.
   2. Install without splices.
   3. Support at not more than 36-inch intervals.
   4. The grounding and bonding conductor pathway through a plenum shall be in EMT.
      a. If a grounding and bonding conductor is installed in ferrous metallic conduit, bond the conductor to the conduit using a grounding bushing that complies with requirements in Section 270528 "Pathways for Communications Systems," and bond both ends of the conduit to a TGB.

3.4 GROUNDING BUSBARS

A. Install busbars horizontally, on insulated spacers 2 inches minimum from wall, 18 inches above finished floor unless otherwise indicated.

B. Where indicated on both sides of doorways, route bus up to top of door frame, across top of doorway, and down; connect to horizontal bus.

3.5 CONNECTIONS

A. Bond metallic equipment in a telecommunications equipment room to the grounding busbar in that room, using equipment grounding conductors not smaller than No. 6 AWG.

B. Stacking of conductors under a single bolt is not permitted when connecting to busbars.

C. Assemble the wire connector to the conductor, complying with manufacturer's written instructions and as follows:
   1. Use crimping tool and the die specific to the connector.
   2. Pre-twist the conductor.
   3. Apply an antioxidant compound to all bolted and compression connections.

D. Primary Protector: Bond to the TMGB with insulated bonding conductor.

E. Interconnections: Interconnect all TGBs with the TMGB with the telecommunications backbone conductor. If more than one TMGB is installed, interconnect TMGBs using the grounding equalizer conductor. The telecommunications backbone conductor and grounding equalizer conductor size shall not be less than 2 kcmils/linear foot of conductor length, up to a maximum size of No. 3/0 AWG unless otherwise indicated.

F. Telecommunications Enclosures and Equipment Racks: Bond metallic components of enclosures to the telecommunications bonding and grounding system. Install top-mounted rack grounding busbar unless the enclosure and rack are manufactured with the busbar. Bond the equipment grounding busbar to the TGB with No. 6 AWG bonding conductors.

G. Structural Steel: Where the structural steel of a steel frame building is readily accessible within the room or space, bond each TGB and TMGB to the vertical steel of the building frame.

H. Electrical Power Panelboards: Where an electrical panelboard for telecommunications equipment is located in the same room or space, bond each TGB to the ground bar of the panelboard.

I. Shielded Cable: Bond the shield of shielded cable to the TGB in communications rooms and spaces. Comply with TIA/EIA-568-C.1 and TIA/EIA-568-C.2 when grounding screened, balanced, twisted-pair cables.

J. Access Floors: Bond all metal parts of access floors to the TGB.

3.6 GROUNDING UNDERGROUND DISTRIBUTION SYSTEM COMPONENTS

A. Duct-Bank Grounding Conductor: Bury 12 inches above duct bank when indicated as part of duct-bank installation.

B. Comply with IEEE C2 grounding requirements.

C. Grounding Manholes and Handholes: Install a driven ground rod through manhole or handhole floor, close to wall, and set rod depth so 4 inches extends above finished floor. If necessary, install ground rod before manhole is placed and provide No. 1/0 AWG bare, tinned-copper conductor from ground rod into manhole through a waterproof sleeve in manhole wall. Protect ground rods passing through concrete floor with a double wrapping of pressure-sensitive insulating tape or heat-shrunk insulating sleeve from 2 inches above to 6 inches below concrete. Seal floor opening with waterproof, non-shrink grout.

D. Grounding Connections to Manhole Components: Bond exposed-metal parts such as inserts, cable racks, pulling irons, ladders, and cable shields within each manhole or handhole, to ground rod or grounding conductor. Make connections with No. 4 AWG minimum, bonding conductor. Train conductors level or plumb around corners and fasten to manhole walls. Connect grounding conductors to cable armor and cable shields according to written instructions by manufacturer of splicing and termination kits.

3.7 IDENTIFICATION

A. Labels shall be preprinted or computer-printed type.
   1. Label TMGB(s) with "fs-TMGB," where "fs" is the telecommunications space identifier for the space containing the TMGB.
   2. Label TGB(s) with "fs-TGB," where "fs" is the telecommunications space identifier for the space containing the TGB.
   3. Label the BCT and each telecommunications backbone conductor at its attachment point: "WARNING! TELECOMMUNICATIONS BONDING CONDUCTOR. DO NOT REMOVE OR DISCONNECT!"

3.8 FIELD QUALITY CONTROL

A. Testing Agency: Engage a qualified testing agency to perform tests and inspections.

B. Perform tests and inspections.

C. Tests and Inspections:
   1. Inspect physical and mechanical condition. Verify tightness of accessible, bolted, electrical connections with a calibrated torque wrench according to manufacturer's written instructions.
   2. Test the bonding connections of the system using an ac earth ground-resistance tester, taking two-point bonding measurements in each telecommunications equipment room containing a TMGB and a TGB and using the process recommended by BICSI TDMM. Conduct tests with the facility in operation.
      a. Measure the resistance between the busbar and the nearest available grounding electrode. The maximum acceptable value of this bonding resistance is 100 milliohms.
   3. Test for ground loop currents using a digital clamp-on ammeter, with a full-scale of not more than 10 A, displaying current in increments of 0.01 A at an accuracy of plus/minus 2.0 percent.
      a. With the grounding infrastructure completed and the communications system electronics operating, measure the current in every conductor connected to the TMGB and in each TGB. Maximum acceptable ac current level is 1 A.

D. Excessive Ground Resistance: If resistance to ground at the BCT exceeds 5 ohms, notify Engineer promptly and include recommendations to reduce ground resistance.

E. Grounding system will be considered defective if it does not pass tests and inspections.

F. Prepare test and inspection reports.

END OF SECTION 270526

SECTION 27 05 28 - PATHWAYS FOR COMMUNICATIONS SYSTEMS

PART 1 - GENERAL

1.1 RELATED DOCUMENTS

A. Drawings and general provisions of the Contract, including General and Supplementary Conditions and Division 01 and Division 27 Specification Sections, apply to this Section.

1.2 SUMMARY

A. Section Includes:
1. Metal conduits and fittings.
2. Nonmetallic conduits and fittings.
3. Optical-fiber-cable pathways and fittings.
4. Metal wireways and auxiliary gutters.
5. Nonmetallic wireways and auxiliary gutters.
6. Surface pathways.
7. Boxes, enclosures, and cabinets.

1.3 ACTION SUBMITTALS

A. Comply with submittal requirements in Section 270500, Common Work Results for Communications.

B. Product Data: For surface pathways, wireways and fittings, floor boxes, hinged-cover enclosures, and cabinets.

C. Shop Drawings: For custom enclosures and cabinets. Include plans, elevations, sections, and attachment details.

D. Samples: For wireways nonmetallic wireways and surface pathways and for each color and texture specified, 12 inches long.

PART 2 - PRODUCTS

2.1 METAL CONDUITS AND FITTINGS

A. Products: Subject to compliance with requirements, provide one of the following:
1. AFC Cable Systems, Inc.
2. Allied Tube & Conduit; a part of Atkore International.
3. Alpha Wire.
4. Southwire Company.
5. Thomas & Betts Corporation.
6. Western Tube and Conduit.

B. General Requirements for Metal Conduits and Fittings:
1. Listed and labeled as defined in NFPA 70, by a qualified testing agency, and marked for intended location and application.
2. Comply with TIA-569-B.

C. GRC: Comply with ANSI C80.1 and UL 6.

D. IMC: Comply with ANSI C80.6 and UL 1242.

E. PVC-Coated Steel Conduit: PVC-coated rigid steel conduit.
1. Comply with NEMA RN 1.
2. Coating Thickness: 0.040 inch, minimum.

F. EMT: Comply with ANSI C80.3 and UL 797.

G. Fittings for Metal Conduit: Comply with NEMA FB 1 and UL 514B.

1. Fittings for EMT:
   a. Material: Steel or die cast.
   b. Type: Setscrew or compression.
2. Expansion Fittings: PVC or steel to match conduit type, complying with UL-467, rated for environmental conditions where installed, and including flexible external bonding jumper.
3. Coating for Fittings for PVC-Coated Conduit: Minimum thickness of 0.040 inch, with overlapping sleeves protecting threaded joints.

H. Joint Compound for IMC, GRC, or ARC: Approved, as defined in NFPA 70, by authorities having jurisdiction for use in conduit assemblies, and compounded for use to lubricate and protect threaded conduit joints from corrosion and to enhance their conductivity.

2.2 NONMETALIC CONDUITS AND FITTINGS

A. General Requirements for Nonmetallic Conduits and Fittings:
1. Listed and labeled as defined in NFPA 70, by a qualified testing agency, and marked for intended location and application.
2. Comply with TIA-569-B.

B. RNC: Type EPC-40-PVC, complying with NEMA TC 2 and UL 651 unless otherwise indicated.

C. Continuous HDPE: Comply with UL 651B.

D. Fittings for RNC: Comply with NEMA TC 3; match to conduit or tubing type and material.

E. Solvent cements and adhesive primers shall have a VOC content of 510 and 550 g/L or less, respectively, when calculated according to 40 CFR 59, Subpart D (EPA Method 24).

2.3 OPTICAL-FIBER-CABLE PATHWAYS AND FITTINGS

A. Description: Comply with UL 2024; flexible-type pathway, approved for plenum or riser installation unless otherwise indicated.
1. Listed and labeled as defined in NFPA 70, by a qualified testing agency, and marked for intended location and application.
2. Comply with TIA-569-B.

2.4 METAL WIREWAYS AND AUXILIARY GUTTERS

A. Description: Sheet metal, complying with UL 870 and NEMA 250, Type 1 unless otherwise indicated, and sized according to NFPA 70.
1. Metal wireways installed outdoors shall be listed and labeled as defined in NFPA 70, by a qualified testing agency, and marked for intended location and application.
2. Comply with TIA-569-B.

B. Fittings and Accessories: Include covers, couplings, offsets, elbows, expansion joints, adapters, hold-down straps, end caps, and other fittings to match and mate with wireways as required for complete system.

C. Wireway Covers: Hinged type unless otherwise indicated.

D. Finish: Manufacturer's standard enamel finish.

2.5 NONMETALIC WIREWAYS AND AUXILIARY GUTTERS

A. General Requirements for Nonmetallic Wireways and Auxiliary Gutters:
1. Listed and labeled as defined in NFPA 70, by a qualified testing agency, and marked for intended location and application.
2. Comply with TIA-569-B.

B. Description: PVC, extruded and fabricated to required size and shape, and having snap-on cover, mechanically coupled connections, and plastic fasteners.

C. Fittings and Accessories: Couplings, offsets, elbows, expansion joints, adapters, hold-down straps, end caps, and other fittings shall match and mate with wireways as required for complete system.

D. Solvent cements and adhesive primers shall have a VOC content of 510 and 550 g/L or less, respectively, when calculated according to 40 CFR 59, Subpart D (EPA Method 24).

2.6 SURFACE PATHWAYS

A. General Requirements for Surface Pathways:
   1. Listed and labeled as defined in NFPA 70, by a qualified testing agency, and marked for intended location and application.
   2. Comply with TIA-569-B.

B. Surface Metal Pathways: Galvanized steel with snap-on covers complying with UL 5. Manufacturer's standard enamel finish in color selected by Architect or prime coated, ready for field painting.

C. Surface Nonmetallic Pathways: Two- or three-piece construction, complying with UL 5A, and manufactured of rigid PVC with texture and color selected by Architect from manufacturer's standard colors. Product shall comply with UL-94 V-0 requirements for self-extinguishing characteristics.

2.7 BOXES, ENCLOSURES, AND CABINETS

A. General Requirements for Boxes, Enclosures, and Cabinets:
   1. Comply with TIA-569-B.
   2. Boxes, enclosures and cabinets installed in wet locations shall be listed for use in wet locations.

B. Sheet-Metal Outlet and Device Boxes: Comply with NEMA OS 1 and UL 514A.

C. Cast-Metal Outlet and Device Boxes: Comply with NEMA FB 1, ferrous alloy, Type FD, with gasketed cover.

D. Box extensions used to accommodate new building finishes shall be of same material as recessed box.

E. Small Sheet Metal Pull and Junction Boxes: NEMA OS 1.

F. Cast-Metal Access, Pull, and Junction Boxes: Comply with NEMA FB 1 and UL 1773, cast aluminum with gasketed cover.

G. Device Box Dimensions: 4 inches square by 2-1/8 inches deep.

H. Hinged-Cover Enclosures: Comply with UL 50 and NEMA 250, Type 1 or Type 3R depending on usage, with continuous-hinge cover with flush latch unless otherwise indicated.
   1. Metal Enclosures: Steel, finished inside and out with manufacturer's standard enamel.

2.8 SOURCE QUALITY CONTROL FOR UNDERGROUND ENCLOSURES

A. Handhole and Pull-Box Prototype Test: Test prototypes of handholes and boxes for compliance with SCTE 77. Strength tests shall be for specified tier ratings of products supplied.
   1. Tests of materials shall be performed by an independent testing agency.
   2. Strength tests of complete boxes and covers shall be by either an independent testing agency or manufacturer. A qualified registered professional engineer shall certify tests by manufacturer.
   3. Testing machine pressure gages shall have current calibration certification complying with ISO 9000 and ISO 10012, and traceable to NIST standards.

PART 3 - EXECUTION

3.1 PATHWAY APPLICATION

A. Outdoors: Apply pathway products as specified below unless otherwise indicated:
   1. Exposed Conduit: GRC or RNC, Type EPC-80-PVC.
   2. Concealed Conduit, Aboveground: EMT.
   3. Underground Conduit: RNC, Type EPC-40-PVC.
   4. Boxes and Enclosures, Aboveground: NEMA 250, Type 3R.

B. Indoors: Apply pathway products as specified below unless otherwise indicated:
   1. Exposed, Not Subject to Physical Damage: EMT.
   2. Exposed and Subject to Physical Damage: GRC. Pathway locations include the following:
      a. Loading dock.
      b. Corridors used for traffic of mechanized carts, forklifts, and pallet-handling units.
      c. Mechanical rooms.
      d. Gymnasiums.
   3. Concealed in Ceilings and Interior Walls and Partitions: EMT or innerduct.
   4. Damp or Wet Locations: GRC.
   5. Pathways for Optical-Fiber or Communications Cable in Spaces Used for Environmental Air: Plenum-type, optical-fiber-cable pathway and EMT.
   6. Pathways for Optical-Fiber or Communications-Cable Risers in Vertical Shafts: Riser-type, optical-fiber-cable pathway, and EMT.
   7. Pathways for Concealed General-Purpose Distribution of Optical-Fiber or Communications Cable: Riser-type, optical-fiber-cable pathway Riser-type, communications-cable pathway or EMT .
   8. Boxes and Enclosures: NEMA 250 Type 1, except use NEMA 250 Type 4 stainless steel in institutional and commercial kitchens and damp or wet locations.

C. Minimum Pathway Size: 1-inch trade size.

D. Pathway Fittings: Compatible with pathways and suitable for use and location.
   1. Rigid and Intermediate Steel Conduit: Use threaded rigid steel conduit fittings unless otherwise indicated. Comply with NEMA FB 2.10.
   2. PVC Externally Coated, Rigid Steel Conduits: Use only fittings listed for use with this type of conduit. Patch and seal all joints, nicks, and scrapes in PVC coating after installing conduits and fittings. Use sealant recommended by fitting manufacturer and apply in thickness and number of coats recommended by manufacturer.
   3. EMT: Use setscrew or compression, steel fittings. Comply with NEMA FB 2.10.

E. Do not install aluminum conduits, boxes, or fittings in contact with concrete or earth.

F. Install surface pathways only where indicated on Drawings. Seek prior approval from Architect or PSU before installing surface pathways.

3.2 INSTALLATION

A. Comply with NECA 1, NECA 101, and TIA-569-B for installation requirements except where requirements on Drawings or in this article are stricter. Comply with NECA 102 for aluminum pathways. Comply with NFPA 70 limitations for types of pathways allowed in specific occupancies and number of floors.

B. Keep pathways at least 6 inches away from parallel runs of flues and steam or hot-water pipes. Install horizontal pathway runs above water and steam piping.

C. Complete pathway installation before starting conductor installation.

D. All communications pathways are to be independently supported. Suspending pathways from piping, HVAC ductwork, ceiling grids, etc. is not acceptable.

E. Arrange stub-ups so curved portions of bends are not visible above finished slab.

F. Install no more than the equivalent of two 90-degree bends in any pathway run. Support within 12 inches of changes in direction. Utilize long radius ells for all optical-fiber cables.

G. Conceal conduit and EMT within finished walls, ceilings, and floors unless otherwise indicated. Install conduits parallel or perpendicular to building lines.

H. Support conduit within 12 inches of enclosures to which they are attached.

I. Pathways Embedded in Slabs:
   1. Run conduit larger than 1-inch trade size, parallel or at right angles to main reinforcement. Where at right angles to reinforcement, place conduit close to slab support. Secure pathways to reinforcement at maximum 10-foot intervals.
   2. Arrange pathways to cross building expansion joints at right angles with expansion fittings.
   3. Arrange pathways to keep a minimum of 2 inches of concrete cover in all directions.
   4. Do not embed threadless fittings in concrete unless specifically approved by Architect for each specific location.

J. Stub-ups to Above Recessed Ceilings:
   1. Use EMT, IMC, or RMC for pathways.
   2. Use a conduit bushing or insulated fitting to terminate stub-ups not terminated in hubs or in an enclosure.

K. Threaded Conduit Joints, Exposed to Wet, Damp, Corrosive, or Outdoor Conditions: Apply listed compound to threads of pathway and fittings before making up joints. Follow compound manufacturer's written instructions.

L. Coat field-cut threads on PVC-coated pathway with a corrosion-preventing conductive compound prior to assembly.

M. Terminate threaded conduits into threaded hubs or with locknuts on inside and outside of boxes or cabinets. Install insulated bushings on conduits terminated with locknuts.

N. Do not rely on locknuts to penetrate nonconductive coatings on enclosures. Remove coatings in the locknut area prior to assembling conduit to enclosure to assure a continuous ground path.

O. Cut conduit perpendicular to the length. For conduits of 2-inch trade size and larger, use roll cutter or a guide to ensure cut is straight and perpendicular to the length.

P. Install pull wires in empty pathways. Use polypropylene or monofilament plastic line with not less than 200-lb tensile strength. Leave at least 12-inches of slack at each end of pull wire. Cap underground pathways designated as spare above grade alongside pathways in use.

Q. Surface Pathways:
   1. Install surface pathway for surface telecommunications outlet boxes only where indicated on Drawings or where prior approval has been obtained from Architect or PSU.
   2. Install surface pathway with a minimum 2-inch radius control at bend points.
   3. Secure surface pathway with screws or other anchor-type devices at intervals not exceeding 48-inches and with no less than two supports per straight pathway section. Support surface pathway according to manufacturer's written instructions. Tape and glue are not acceptable support methods.

R. Pathways for Optical-Fiber and Communications Cable: Install pathways, metal and nonmetallic, rigid and flexible, as follows:
   1. 1-Inch Trade Size and Larger: Install pathways in maximum lengths of 75 feet.
   2. Install with a maximum of two 90-degree bends or equivalent for each length of pathway unless Drawings show stricter requirements. Separate lengths with pull or junction boxes or terminations at distribution frames or cabinets where necessary to comply with these requirements.

S. Install pathway sealing fittings at accessible locations according to NFPA 70 and fill them with listed sealing compound. For concealed pathways, install each fitting in a flush steel box with a blank cover plate having a finish similar to that of adjacent plates or surfaces. Install pathway sealing fittings according to NFPA 70.

T. Install devices to seal pathway interiors at accessible locations. Locate seals so no fittings or boxes are between the seal and the following changes of environments. Seal the interior of all pathways at the following points:
   1. Where conduits pass from warm to cold locations, such as boundaries of refrigerated spaces.
   2. Where an underground service pathway enters a building or structure.
   3. Where otherwise required by NFPA 70.

U. Comply with manufacturer's written instructions for solvent welding PVC conduit and fittings.

V. Expansion-Joint Fittings:
   1. Install in each run of aboveground RNC that is located where environmental temperature change may exceed 30 deg F, and that has straight-run length that exceeds 25 feet. Install in each run of aboveground RMC and EMT conduit that is located where environmental temperature change may exceed 100 deg F and that has straight-run length that exceeds 100 feet.

2. Install fitting(s) that provide expansion and contraction for at least 0.00041 inch per foot of length of straight run per deg F of temperature change for PVC conduits. Install fitting(s) that provide expansion and contraction for at least 0.000078 inch per foot of length of straight run per deg F of temperature change for metal conduits.
3. Install expansion fittings at all locations where conduits cross building or structure expansion joints.
4. Install each expansion-joint fitting with position, mounting, and piston setting selected according to manufacturer's written instructions for conditions at specific location at time of installation. Install conduit supports to allow for expansion movement.

W. Mount boxes at heights indicated on Drawings. If mounting heights of boxes are not individually indicated, give priority to ADA requirements. Install boxes at 18-inches above finished floor, measured to center of box, unless indicated otherwise. Where installed in an existing building, match the height of existing electrical outlets.

X. Recessed Boxes in Masonry Walls: Saw-cut opening for box in center of cell of masonry block, and install box flush with surface of wall. Prepare block surface to provide a flat surface for a raintight connection between box and cover plate or supported equipment and box.

Y. Horizontally separate boxes mounted on opposite sides of walls so they are not in the same vertical channel.

Z. Support boxes of three gangs or more from more than one side by spanning two framing members or mounting on brackets specifically designed for the purpose.

AA. Fasten junction and pull boxes to or support from building structure. Do not support boxes by conduits.

BB. Set metal floor boxes level and flush with finished floor surface.

CC. Set nonmetallic floor boxes level. Trim after installation to fit flush with finished floor surface.

3.3 SLEEVE AND SLEEVE-SEAL INSTALLATION FOR COMMUNICATIONS PENETRATIONS

A. Install sleeves and sleeve seals at penetrations of exterior floor and wall assemblies.

B. Sleeve and sleeve seals shall comply with the wall rating of the wall requiring penetration.

3.4 FIRESTOPPING

A. Comply with requirements in Section 270500, Common Work Results for Communications.

B. Install re-enterable fire stop sleeves at all fire-rated wall penetrations.
1. STI EZ-Path Series 44+, or approved equivalent.

3.5 PROTECTION

A. Protect coatings, finishes, and cabinets from damage or deterioration.
1. Repair damage to galvanized finishes with zinc-rich paint recommended by manufacturer.\
2. Repair damage to PVC coatings or paint finishes with matching touchup coating recommended by manufacturer.

END OF SECTION 270528

SECTION 27 05 36 - CABLE TRAYS FOR COMMUNICATIONS SYSTEMS

PART 1 - GENERAL

1.1 RELATED DOCUMENTS

A. Drawings and general provisions of the Contract, including General and Supplementary Conditions and Division 01 and Division 27 Specification Sections, apply to this Section.

1.2 SUMMARY

A. Section Includes:
   1. Ladder cable trays.
   2. Wire-basket cable trays.

1.3 DEFINITIONS

A. See 270500, Common Work Results for Communications.

1.4 ACTION SUBMITTALS

A. Comply with submittal requirements in Section 270500, Common Work Results for Communications.

B. Product Data: For each type of cable tray.
   1. Include data indicating dimensions and finishes for each type of cable tray indicated.

C. Shop Drawings: For each type of cable tray.
   1. Show fabrication and installation details of cable trays, including plans, elevations, and sections of components and attachments to other construction elements. Designate components and accessories, including clamps, brackets, hanger rods, splice-plate connectors, expansion-joint assemblies, straight lengths, and fittings.

D. Coordination Drawings: Floor plans and sections, drawn to scale, on which the following items are shown and coordinated with each other, using input from installers of the items involved:
   1. Include scaled cable tray layout and relationships between components and adjacent structural, electrical, and mechanical elements.
   2. Vertical and horizontal offsets and transitions.
   3. Clearances for access above and to side of cable trays.
   4. Vertical elevation of cable trays above the floor or below bottom of ceiling structure.

E. Seismic Qualification Certificates: For cable trays, accessories, and components, from manufacturer.
   1. Basis for Certification: Indicate whether withstand certification is based on actual test of assembled components or on calculation.
   2. Dimensioned Outline Drawings of Equipment Unit: Identify center of gravity and locate and describe mounting and anchorage provisions.
   3. Detailed description of equipment anchorage devices on which the certification is based and their installation requirements.

PART 2 - PRODUCTS

2.1 GENERAL REQUIREMENTS FOR CABLE TRAYS

A. Cable Trays and Accessories: Identified as defined in NFPA 70 and marked for intended location, application, and grounding.
   1. Source Limitations: Obtain cable trays and components from single manufacturer.

2.2 LADDER CABLE TRAYS

A. Products: Subject to compliance with requirements, provide the following:
   1. Chatsworth Products, Inc.

B. Description:
   1. Configuration: 12-inch wide UL Classified Universal Cable Runway, manufactured from 3/8-inch wide by 1-1/2-inch high tubular steel with 0.065-inch wall thickness.
   2. Include Junction Splice Kit, Butt Splice Kit, and additional materials to comply with configuration shown on Drawings.
   3. Rung Spacing: 9 inches o.c.
   4. Minimum Cable-Bearing Surface for Rungs: 7/8-inch width with radius edges.
   5. No portion of the rungs shall protrude below the bottom plane of side rails.
   6. Structural Performance of Each Rung: Capable of supporting a maximum cable load, with a safety factor of 1.5, plus a 200-lb concentrated load, when tested according to NEMA VE 1.
   7. Minimum Usable Load Depth: 4 inches.
   8. Straight Section Lengths: 10 feet except where shorter lengths are required to facilitate tray assembly.
   9. Width: 12 inches unless otherwise indicated on Drawings.
   10. Fitting Minimum Radius: 24 inches.
   11. Splicing Assemblies: Bolted type using serrated flange locknuts.
   12. Splice Plate Capacity: Splices located within support span shall not diminish rated loading capacity of cable tray.

2.3 WIRE-BASKET CABLE TRAYS

A. Products: Subject to compliance with requirements, provide the following:
   1. Chatsworth Products, Inc.

B. Description:
   1. Configuration: Wires are formed into a standard 2-by-4-inch wire mesh pattern with intersecting wires welded together. Mesh sections must have at least one bottom longitudinal wire along entire length of section.
   2. Materials: High-strength-steel longitudinal wires with no bends.
   3. Safety Provisions: Wire ends along wire-basket sides (flanges) rounded during manufacturing to maintain integrity of cables and installer safety.
   4. Sizes:
      a. Straight sections shall be furnished in standard 118-inch lengths.
      b. Wire-Basket Depth: 4-inch (100-mm) usable loading depth by 8 inches, 12 inches, 18 inches, or 24 inches, wide.
   5. Connector Assemblies: Bolt welded to plate shaped to fit around adjoining tray wires and mating plate. Mechanically joins adjacent tray wires to splice sections together or to create horizontal fittings.
   6. Connector Assembly Capacity: Splices located within support span shall not diminish rated loading capacity of cable tray.
   7. Hardware and Fasteners: ASTM F 593 and ASTM F 594 stainless steel, Type 316.

2.4 CABLE TRAY ACCESSORIES

A. Fittings: Tees, crosses, risers, elbows, and other fittings as indicated, of same materials and finishes as cable tray.

B. Cable tray supports and connectors, including bonding jumpers, as recommended by cable tray manufacturer.

PART 3 - EXECUTION

3.1 CABLE TRAY INSTALLATION

A. Install cable trays as a complete system, including fasteners, hold-down clips, support systems, barrier strips, adjustable horizontal and vertical splice plates, elbows, reducers, tees, crosses, cable dropouts, adapters, covers, and bonding.

B. Install cable trays so that the tray is accessible for cable installation and all splices are accessible for inspection and adjustment.

C. Remove burrs and sharp edges from cable trays.

D. Join aluminum cable tray with splice plates; use four square neck-carriage bolts and locknuts.

E. Fasten cable tray supports to building structure.

F. Design fasteners and supports to carry cable tray, the cables, and a concentrated load of 200 lb.

G. Place supports so that spans do not exceed maximum spans on schedules and provide clearances shown on Drawings. Install intermediate supports when cable weight exceeds the load-carrying capacity of the tray rungs.

H. Construct supports from channel members, threaded rods, and other appurtenances furnished by cable tray manufacturer. Arrange supports in trapeze or wall-bracket form as required by application.

I. Do not install more than one cable tray splice between supports.

J. Support wire-basket cable trays with center support hangers, or trapeze hangers.

K. Support center support hangers and trapeze hangers for wire-basket trays with 3/8-inch diameter rods.

L. Make changes in direction and elevation using manufacturer's recommended fittings.

M. Make cable tray connections using manufacturer's recommended fittings.

N. Install cable trays with enough workspace to permit access for installing cables.

O. Clamp covers on cable trays installed outdoors with heavy-duty clamps.

3.2 CABLE TRAY GROUNDING

A. Ground cable trays according to NFPA 70 unless additional grounding is specified. Comply with requirements in Section 270526 "Grounding and Bonding for Communications Systems."

B. Cable trays with communications cable shall be bonded together with splice plates listed for grounding purposes or with listed bonding jumpers.

C. Cable trays with control conductors shall be bonded together with splice plates listed for grounding purposes or with listed bonding jumpers.

D. When using epoxy- or powder-coat painted cable trays as a grounding conductor, completely remove coating at all splice contact points or ground connector attachment. After completing splice-to-grounding bolt attachment, repair the coated surfaces with coating materials recommended by cable tray manufacturer.

E. Bond cable trays to power source for cables contained within with bonding conductors sized according to NFPA 70, Article 250.122, "Size of Equipment Grounding Conductors."

3.3 CABLE INSTALLATION

A. Install cables only when each cable tray run has been completed and inspected.

B. Fasten cables on vertical runs to cable trays every 18 inches.

C. Fasten and support cables that pass from one cable tray to another or drop from cable trays to equipment enclosures. Fasten cables to the cable tray at the point of exit and support cables independent of the enclosure. The cable length between cable trays or between cable tray and enclosure shall be no more than 72 inches.

D. In existing construction, remove inactive or dead cables from cable trays.

3.4 CONNECTIONS

A. Remove paint from all connection points before making connections. Repair paint after the connections are completed.

B. Connect pathways to cable trays according to requirements in NEMA VE 2 and NEMA FG 1.

3.5 FIELD QUALITY CONTROL

A. Perform the following tests and inspections:
   1. After installing cable trays and after electrical circuitry has been energized, survey for compliance with requirements.
   2. Visually inspect cable insulation for damage. Correct sharp corners, protuberances in cable trays, vibrations, and thermal expansion and contraction conditions, which may cause or have caused damage.
   3. Verify that the number, size, and voltage of cables in cable trays do not exceed that permitted by NFPA 70. Verify that communications or data-processing circuits are separated from power circuits by barriers or are installed in separate cable trays.
   4. Verify that there are no intruding items such as pipes, hangers, or other equipment in the cable tray.
   5. Remove dust deposits, industrial process materials, trash of any description, and any blockage of tray ventilation.
   6. Visually inspect each cable tray joint and each ground connection for mechanical continuity. Check bolted connections between sections for corrosion. Clean and retorque in suspect areas.
   7. Check for improperly sized or installed bonding jumpers.
   8. Check for missing, incorrect, or damaged bolts, bolt heads, or nuts. When found, replace with specified hardware.
   9. Perform visual and mechanical checks for adequacy of cable tray grounding; verify that all takeoff raceways are bonded to cable trays. Test entire cable tray system for continuity. Maximum allowable resistance is 1 ohm.

B. Prepare test and inspection reports.

3.6 PROTECTION

A. Protect installed cable trays and cables.
   1. Install temporary protection for cables in open trays to safeguard exposed cables against falling objects or debris during construction. Temporary protection for cables and cable tray can be constructed of wood or metal materials and shall remain in place until the risk of damage is over.
   2. Repair damage to galvanized finishes with zinc-rich paint recommended by cable tray manufacturer.
   3. Repair damage to paint finishes with matching touchup coating recommended by cable tray manufacturer.

END OF SECTION 270536

SECTION 27 11 00 - COMMUNICATIONS EQUIPMENT ROOM FITTINGS

PART 1 - GENERAL

1.1 RELATED DOCUMENTS

A. Drawings and general provisions of the Contract, including General and Supplementary Conditions and Division 01 and Division 27 Specification Sections, apply to this Section.

1.2 SUMMARY

A. Section Includes:
1. Telecommunications mounting elements.
2. Backboards.
3. Telecommunications equipment racks and cabinets.
4. Grounding.

1.3 DESCRIPTION, PSU TERMINAL CLOSETS

A. There shall be at least one terminal closet per floor. Additional closets should be provided when the floor area exceeds 10,000 sq. ft. or the horizontal distribution distance to the workstation exceeds 90 meter (300 ft). There are typically two size scenarios for terminal closets: 1) the ideal situation where there is ample space to provide a minimum closet size of 10 ft. by 8 ft. with (3) 19” racks and VCT tile as flooring. Telecom closet must have ingle door at least 30 inches wide and 80 inches tall, opening out; and 2) the limited space scenario where the closet size should be a minimum of 7 ft. wide and 30 inches deep with VCT Tile, both of which are inside dimensions, provided the closet is accessed via double doors which swing out away from the closet. In either scenario, the closet should be at least 8 feet high. Each closet shall have sufficient power and lighting.

B. PSU’s minimum power requirements are two dedicated 120V 20 amp quad power outlets per rack. Power supply (including lights) in the closet shall be on emergency power. Additionally, each closet shall have adequate airflow to ensure that operating temperatures do not drop below 50° F or exceed 80° F.

C. If applicable, the use of a lockable wall mounted cabinet must be approved by PSU Telecom. Minimum dimensions for a lockable wall mounted cabinet is as follows; 3 feet tall, 2 feet deep with 19 inch mounting.

D. Closets shall be “centrally located” on each floor, or located so that horizontal station wires runs to user work stations and phones do not exceed 200 feet. The preferred standard for station wire is 150 feet. Each closet shall have sufficient sleeves, slots, conduits, or similar floor penetrations necessary to allow for ease of installation of telecommunications cabling and wiring. Such penetrations shall be properly firestopped per the applicable building codes.

E. A minimum of two walls should be covered with rigidly fixed (3/4 trade size) A-C plywood preferably void free, 8ft. high, capable of supporting attached equipment. Plywood should be either fire rated or covered with two coats of fire retardant paint.

1.4 DEFINITIONS

A. See 270500, Common Work Results for Communications.

1.5 ACTION SUBMITTALS

A. Comply with submittal requirements in Section 270500, Common Work Results for Communications.

B. Shop Drawings: Comply with 270500, Common Work Results for Communications and provide specific for communications equipment room fittings. Include plans, elevations, sections, details, and attachments to other work.
1. Detail equipment assemblies and indicate dimensions, weights, loads, required clearances, method of field assembly, components, and location and size of each field connection.

2. Equipment Racks and Cabinets: Include workspace requirements and access for cable connections.
3. Grounding: Indicate location of grounding bus bar and its mounting detail showing standoff insulators and wall mounting brackets.

1.6 QUALITY ASSURANCE

A. Comply with requirements of Quality Assurance in 270500.

PART 2 - PRODUCTS

2.1 BACKBOARDS

A. Backboards: Plywood, fire-retardant treated, 3/4 by 48 by 96 inches.
1. Cover all walls in Communications Equipment Rooms from 6-inches to 8-foot, 6-inches above finished floor.

2.2 EQUIPMENT FRAMES

A. Disregard this article if all cross-connects and patch panels are mounted on backboards.

B. Products: Subject to compliance with requirements, provide the following:
1. Chatsworth Products, Inc.

C. General Frame Requirements:
1. Distribution Frames: Freestanding, modular units designed for telecommunications equipment mounting.
2. Module Dimension: Width compatible with EIA 310-D standard, 19-inch panel mounting.
3. Finish: Manufacturer's standard, baked-polyester powder coat.

D. Floor-Mounted Racks: Modular-type, high strength aluminum construction.
1. 84-inches in height.
2. UL Listed.
3. Two top angle, and two base angle mounts.
4. Side rails capable of vertical cable management channel attachment.
5. Epoxy-polyester hybrid powder coat finish, black in color.
6. 3-inch deep mounting channels punched in the front and rear flange with EIA-310-D hole pattern, 1-3/4-inch rack mount spaces marked and numbered on the mounting channel.
7. Chatsworth Products Inc., 55053-703.

E. Vertical Cable Management Channels:
1. The cable manager shall be sized to match cabling requirements. The initial quantity of cables within the cable manager shall not exceed a whole number value equal to 40% of the interior area of the cable manager.
2. Epoxy-polyester hybrid powder coat finish, black in color.
3. Vertical cable management panels shall have front and rear channels, with covers.
4. Provide horizontal crossover cable manager at the top of each relay rack, with a minimum height of two rack units each.
5. Double-sided 3.65-inch wide by 84-inches tall. Chatsworth Products Inc., 12096-703.
6. Double-sided 6-inch wide by 84-inches tall. Chatsworth Products Inc., 11729-703.

2.3 LADDER RACK, SUPPORTS, AND ACCESSORIES

A. Ladder Rack (Universal Cable Runway)
1. Ladder rack shall be manufactured from 3/8-inch wide by 1-1/2-inches high tubular steel with .065-inch wall thickness.
2. Ladder rack (side stringers) will be 9-feet-11½-inches long. Cross members will be welded in between stringers on 12-inches intervals/centers beginning 5-3/4-inches from one end so that there are 10 cross members per ladder rack. There will be 10-1/2-inches of open space in between each cross member.
3. Ladder rack will be delivered individually boxed, and available in the width(s) specified below.

4. Ladder rack will be UL Classified for suitability as an equipment grounding conductor only (the installer must remove paint or use ground straps at splices and intersections).
5. Finish shall be epoxy-polyester hybrid powder coat (paint) in the color(s) specified below.
6. Manufacturer: Chatsworth Products, Inc. (CPI), Universal Cable Runway:
7. Part Number 10250-712, Universal Cable Runway, 12-inches Wide, Black finish

B. Horizontal 90° Turns (Cable Runway E-Bend)
1. Horizontal 90° turns shall be manufactured from 3/8 wide by 11/2-inches high tubular steel with .065-inches wall thickness.
2. Stringers (sides) will be formed in a 90° arc. Cross members will be welded in between stringers on approximate 23° increments so that there are 5 cross members per turn. The welded assembly will have a 15-inches inside radius and will create a smooth horizontal 90° turn.
3. Horizontal 90° turns will be available in the width(s) specified below.
4. Black finish

C. Vertical-To-Horizontal 90° Turns (Cable Runway Outside Radius Bend)
1. Vertical-to-horizontal 90° turns shall be manufactured from 3/8-inch wide by 1-1/2-inches high tubular steel with .065-inch wall thickness.
2. Stringers (sides) will be formed in a 90° arc with a 12-1/2-inches outside radius. Cross members will be welded in between stringers on approximate 23° increments so that there are 3 cross members per turn. The welded assembly will create a smooth 90° vertical-to-horizontal turn.
3. Vertical-to-horizontal 90° turns will be available in width(s) specified below.
4. Black finish

D. Horizontal-To-Vertical 90° Turns (Cable Runway Inside Radius Bend)
1. Horizontal-to-vertical 90° turns shall be manufactured from 3/8-inch wide by 1-1/2-inches high tubular steel with .065-inch wall thickness.
2. Stringers (sides) will be formed in a 90° arc with a 12-1/2-inches outside radius. Cross members will be welded in between stringers on approximate 23° increments so that there are 3 cross members per turn. The welded assembly will create a smooth 90° horizontal-to-vertical turn.
3. Horizontal-to-vertical 90° turns will be available in the width(s) specified below.

E. Corner Brackets (Cable Runway Corner Bracket)
1. Corner brackets shall be manufactured from 3/8-inch wide by 1-1/2-inches high tubular steel with .065-inch wall thickness.
2. The inside stringers of the corner bracket will be formed at 90° with a small chamfer at the vertex. The outside stringer of the corner bracket will be formed in a 90° arc that is either 15-inches or 24-inches in radius. A single cross member will connect the chamfered portion of the inside stringer to the outside stringer. The welded assembly will create a smooth 90° turn within the L-shaped corner created by two intersecting ladder racks.
3. Corner brackets will be available in the size(s) specified below. Installation hardware will be included with the corner bracket. Corner bracket installation hardware does not include the junction splice kit required to form the L-shaped intersection between two ladder racks.

F. Ladder Rack Splices
1. Splice kits will provide a method of mechanically connecting ladder rack sections and turns together end-to-end or side-to-end to form a continuous pathway for cables.
2. Grounding kits will provide a method of bonding ladder rack sections and turns together that is independent of the pathway splices. The grounding kit should be constructed of UL Listed components. The preferred solution is a #6 AWG green insulated stranded copper conductor connected on both ends to ladder rack using two-hole compression lugs and stainless steel hardware.
3. An insulator bar kit will provide a means of electrically isolating individual ladder rack sections through an end-to-end splice separated with a non-conductive material. The preferred solution is a 3/8-inch wide by 1-1/2-inches high by 5-1/2-inches long insulator bar made of Delrin® (by DuPont, Delrin is a registered trademark of E.I. du Pont de Nemours and Company).
4. Splices (splice plates) will be manufactured from steel. Splice, grounding and insulator bar kits will include installation hardware.
5. Finish (of splice plates and hardware) shall be zinc plate in the color(s) specified below. Colors are applied as a chem. film over the zinc plate.
6. Manufacturer: Chatsworth Products, Inc. (CPI), Cable Runway Splices:
   a. Part Number 11301-701, Butt-Splice Kit, Black. Compression splice for end-to-end connections.
   b. Part Number 11302-701, Junction-Splice Kit, Black. Compression splice for T- or L-connections.

G. Ladder Rack Supports
1. Supports will be sized to match the width of the ladder rack that is supported. Some supports will work with multiple or all widths of ladder rack.

2. Each support will include a means of mechanically securing ladder rack to the support.
3. Supports will be manufactured from steel or aluminum.
4. Finish shall be epoxy-polyester hybrid powder coat (paint) in the color(s) specified below or zinc plate with a gold chem. finish specified gold. Included hardware shall be zinc plated with a gold chem. finish.
5. Manufacturer: Chatsworth Products, Inc. (CPI), Cable Runway Supports:
    a. Part Number 11421-712, Wall Angle Support Kit, For 12-inches Wide Cable Runway (Ladder Rack), Steel, Black. NOTE: Wall support for end of cable runway. Installation requires (2) 5/16-inches lag bolts and (2) flat washers or concrete wall hardware (ordered separately).
    b. Part Number 10595-712, Rack-To-Runway Mounting Plate, For 9-inches to 12-inches Wide Cable Runway (Ladder Rack), for Standard and Universal Racks with 3-inches Deep Equipment Mounting Channels, Steel, Black. NOTE: Rack-To-Runway Mounting Plate attaches cable runway to the top of 2-post freestanding racks in parallel or perpendicular orientation. Includes J-bolt installation hardware for 1-1/2-inches High cable runway and rack top angles. CPI recommends use with Cable Runway Elevation Kit.

H. Ladder Rack Accessories
1. Cable straps used for attaching cable bundles to the ladder rack cross members must be reusable with a hook and loop-style closure, at least 3/4-inch wide, and sized for cable bundles that are 2-inches, 3-inches or 4-inches in diameter.
2. Cable retaining posts used to keep cable from falling off of the side of the ladder rack shall be manufactured from 1-inch by ½-inch tubular steel with .065-inch wall thickness. Cable retaining posts will be 8-inches high and will attach to the side stringer of the ladder rack with included hardware. The top of the cable retaining posts will be fitted with a rubberized end cap to protect cables.
3. End caps used to cover the ends of ladder rack will be manufactured from a black fire-retardant rubberized material. End caps will be sized for 3/8-inch wide by 1-1/2 -inches high side stingers and will be sold in pairs.
4. End closing kits used to cover the end of ladder rack will be manufactured from 3/8-inch wide by 1-1/2-inches high tubular steel with .065-inch wall thickness. Kits will consist of a bar cut to match the width of the ladder rack and the hardware required to attach the bar to the end of a length of ladder rack.
5. Radius drops used to create a radius to form cables over as the cables exit or enter the ladder rack will be manufactured from aluminum extrusion. The extrusion will be formed in a 90° arc with a minimum bend radius of 3-inches. Radius drops will attach to either the side stringer or the cross member of the ladder rack using a clevis pin. Radius drops will include 11/2-inch high cable spools that attach to the top of the radius drop to guide cables.
6. Movable cross members used to support cross member radius drops in between welded cross members on ladder rack will be manufactured from 3/8-inch by 1-1/2-inches aluminum bar. Movable cross members will attach to ladder rack at the side stringers with included hardware so that the location of the movable cross member can be adjusted. Moveable cross member will support a cross member radius drop.
7. Cable spools used to separate ladder rack into multiple cable pathways will be made from a black flame retardant ABS. Cable spools will attach to the cross members with a clip that allows the width of the ladder rack to be divided into any proportion. The spools will be 3.94-inches tall, with a 1.94-inches diameter top cap, and a body that tapers from .88-inch diameter at the top to .62-inch diameter at the bottom.
8. Auxiliary support brackets used to support cables that should be physically separated from the cables in the ladder rack will be made from 1/8-inch by 1-inch steel bar. The bracket will be L-shaped and will attach to the side stringer of the ladder rack. The bracket will hang below the ladder rack a minimum of 4-inches. The bracket support surface will be 4-inches long. The bracket will be zinc plated with a gold chem. finish.
9. Touch-up paint used on ladder rack and ladder rack system components will be color-matched to the finish on the ladder rack or component. A spray on and brush on option will be available.
10. Unless otherwise noted, finish on all metal components shall be epoxy-polyester hybrid powder coat (paint) in the color(s) specified below. Hardware will be zinc plated with a gold chem. finish.
11. Manufacturer: Chatsworth Products, Inc. (CPI), Cable Runway Accessories:
    a. Part Number 10596-706, Cable Retaining Post, 6-inches High, Black.
    b. Part Number 10642-001, Cable Runway Protective End Caps, 1 Pair, Black.

2.4 LABELING

A. Comply with TIA/EIA-606-A and UL 969 for a system of labeling materials, including label stocks, laminating adhesives, and inks used by label printers.

PART 3 - EXECUTION

3.1 ENTRANCE FACILITIES

A. Contact telecommunications service provider and arrange for installation of demarcation point, protected entrance terminals, and housing when so directed by service provider.

B. Comply with requirements in Section 270528 "Pathways for Communications Systems" for materials and installation requirements for entrance pathways.

3.2 INSTALLATION

A. Comply with NECA 1.

B. Comply with BICSI TDMM for layout and installation of communications equipment rooms.

C. Bundle, lace, and train conductors and cables to terminal points without exceeding manufacturer's limitations on bending radii. Install lacing bars and distribution spools.

D. Coordinate layout and installation of communications equipment with PSU's Telecom Department. Coordinate service entrance arrangement with local exchange carrier.
   1. Meet jointly with PSU Telecom Department, local exchange carrier representatives to exchange information and agree on details of equipment arrangements and installation interfaces.
   2. Record agreements reached in meetings and distribute them to other participants.
   3. Adjust arrangements and locations of distribution frames, cross-connects, and patch panels in equipment rooms to accommodate and optimize arrangement and space requirements of telephone switch and networking equipment.
   4. Adjust arrangements and locations of equipment with distribution frames, cross-connects, and patch panels of cabling systems of other communications, electronic safety and security, and related systems that share space in the equipment room.

E. Coordinate location of power outlets, raceways and receptacles with locations of communications equipment requiring electrical power to operate. Power outlets are to be installed above each equipment rack to support communications equipment.

3.3 FIRESTOPPING

A. Comply with TIA-569-B, Annex A, "Firestopping."

B. Comply with BICSI TDMM, "Firestopping Systems" Article.

3.4 GROUNDING

A. Install grounding according to BICSI TDMM, "Grounding, Bonding, and Electrical Protection" Chapter.

B. Comply with J-STD-607-A.

C. Locate grounding bus bar to minimize the length of bonding conductors. Fasten to wall allowing at least 2-inch clearance behind the grounding bus bar. Connect grounding bus bar with a minimum No. 4 AWG grounding electrode conductor from grounding bus bar to suitable electrical building ground. Use table in the J-STD-607-A to calculate conductor size based on distance, with any distance over 66-feet requiring a 3/0 conductor.

D. Bond metallic equipment to the grounding bus bar, using not smaller than No. 6 AWG equipment grounding conductor.
   1. Bond the shield of shielded cable to the grounding bus bar in communications rooms and spaces.

3.5 IDENTIFICATION

A. Comply with requirements in specification 270500, Common Work Results for Communication.

END OF SECTION 271100

SECTION 27 13 00 - COMMUNICATIONS BACKBONE CABLING

PART 1 - GENERAL

1.1 RELATED DOCUMENTS

A. Drawings and general provisions of the Contract, including General and Supplementary Conditions and Division 01 and Division 27 Specification Sections, apply to this Section.

B. Refer to appendices at the following hyperlink: https://www.pdx.edu/technology/telecom-infrastructure-wiring-standards

1.2 SUMMARY

A. Section Includes:
1. Pathways.
2. UTP cable.
3. Single-Mode optical fiber cabling.
4. Cable connecting hardware, patch panels, and cross-connects.
5. Cabling identification products.

1.3 DEFINITIONS

A. See 270500, Common Work Results for Communications.

1.4 BACKBONE CABLING DESCRIPTION

A. Backbone cabling system shall provide interconnections between communications equipment rooms, main terminal space, and entrance facilities in the telecommunications cabling system structure. Cabling system consists of backbone cables, intermediate and main cross-connects, mechanical terminations, and patch cords or jumpers used for backbone-to-backbone cross-connection.

B. Backbone cabling cross-connects may be located in communications equipment rooms or at entrance facilities. Bridged taps and splitters shall not be used as part of backbone cabling.

1.5 PERFORMANCE REQUIREMENTS

A. General Performance: Backbone cabling system shall comply with transmission standards in TIA/EIA-568-C, when tested according to test procedures of this standard.

1.6 ACTION SUBMITTALS

A. Comply with submittal requirements in Section 270500, Common Work Results for Communications.

B. Shop Drawings. comply with 270500, Common Work Results for Communications and in addition:
1. Wiring diagrams to show typical wiring schematics including the following:
   a. Cross-connects.
   b. Patch panels.
   c. Patch cords.
2. Cross-connects and patch panels. Detail mounting assemblies, and show elevations and physical relationship between the installed components.
3. Cable tray layout, showing cable tray route to scale, with relationship between the tray and adjacent structural, electrical, and mechanical elements. Include the following:
   a. Vertical and horizontal offsets and transitions.
   b. Clearances for access above and to side of cable trays.
   c. Vertical elevation of cable trays above the floor or bottom of ceiling structure.

d. Load calculations to show dead and live loads as not exceeding manufacturer's rating for tray and its support elements.

1.7 CLOSEOUT SUBMITTALS

A. Maintenance Data: For splices and connectors to include in maintenance manuals.

B. Software and Firmware Operational Documentation per Closeout Submittals in Section 270500, Common Work Results for Communications.

1.8 QUALITY ASSURANCE

A. Comply with requirements of Quality Assurance in 270500.

B. Telecommunications Pathways and Spaces: Comply with TIA/EIA-569-A.

C. Grounding: Comply with ANSI-J-STD-607-A.

1.9 DELIVERY, STORAGE, AND HANDLING

A. Test cables upon receipt at Project site.
1. Test optical fiber cable to determine the continuity of the strand end to end. Use optical loss test set.
2. Test optical fiber cable while on reels. Use an optical time domain reflectometer to verify the cable length and locate cable defects, splices, and connector, including the loss value of each. Retain test data and include the record in maintenance data.
3. Test each pair of UTP cable for open and short circuits.

PART 2 - PRODUCTS

2.1 UTP CABLE

A. Copy this article and re-edit for each product.

B. Products: Subject to compliance with requirements, provide the following:
1. Legrand, LLC.

C. Description: 100-ohm, multi-pair UTP, formed into 25-pair binder groups covered with a gray thermoplastic jacket.
1. Comply with ICEA S-90-661 for mechanical properties.
2. Comply with TIA/EIA-568-C.1 for performance specifications.
3. Comply with TIA/EIA-568-C.2, for Category 3, Category 5e, Category 6, and Category 6A performance.
4. Listed and labeled by an NRTL acceptable to authorities having jurisdiction as complying with UL 444 and NFPA 70 for the following types:
a. Communications, Plenum Rated: Type CMP or MPP, complying with NFPA 262.
b. Communications, Riser Rated: Type CMR; or MPP, CMP, or MPR, complying with UL 1666.
c. Multipurpose, Plenum Rated: Type MPP, complying with NFPA 262.
d. Multipurpose, Riser Rated: Type MPR or MPP, complying with UL 1666.

2.2 UTP CABLE HARDWARE

A. Products: Subject to compliance with requirements, provide the following:
1. Legrand, LLC

B. General Requirements for Cable Connecting Hardware: Comply with TIA/EIA-568-C.2, IDC type, with modules designed for punch-down caps or tools. Cables shall be terminated with connecting hardware of same category or higher.

C. Connecting Blocks: 110-style IDC for Category 5e. Provide blocks for the number of cables terminated on the block, plus 25 percent spare. Integral with connector bodies, including plugs and jacks where indicated.

Contractor shall contact PSU Telecom before ordering and terminating connector blocks. There may be variation in needs specific to each project.

D. Cross-Connect: Modular array of connecting blocks arranged to terminate building cables and permit interconnection between cables.
   1. Number of Terminals per Field: One for each conductor in assigned cables.

E. Multi-pair Patch Panel: Modular panels housing multiple-numbered jack units with IDC-type connectors at each jack for permanent termination of pair groups of installed cables.
   1. General specifications: Construct patch panel of high strength steel with black powder finish and design for wall or 19-inch rack mounting. Panels shall be available in 24-port and 48-port configurations, with height of 1 RU of 44.5 millimeters (1.75 inches) for each group of 24 ports. Patch panel shall be UL listed and ULC certified. Unit shall accommodate vertical and horizontal cord organizers available to facilitate patch cord management.
      a. Provide 8-pin RJ-45 modular patch jacks on the front of the panel and 50-pin female patch connections on the back.
      b. Optional - Provide 8- RJ-45 pin modular patch jacks on the front of the panel and 50-pin female patch connections on the back, with 2 pairs terminated on each 8-pin patch outlet. Pair 1 is terminated on pins 1 and 2; pair 2 is terminated on pins 3 and 6, which provides one 50-pin connector serving 12 patch outlets.
   2. Comply with following standards:
      a. ISO/IEC 11801
      b. CENELEC EN-50173
      c. UL, ULC, and ACMA
   3. Application standards: Support application standards specified for related cabling.
   4. Jacks: Comply with jack requirements specified for related cable category.
   5. BAS applications: Comply with specifications for related cabling.
   6. Performance specifications: Comply with specifications for related cabling.

F. Category 3 Multipair Connectors and Cable Assemblies:
   1. General specifications: Category 3 multipair connectors and cable assemblies consist of 25-pair category 3 multipair cables connectorized with either one or two category 3 multipair connectors. Category 5 multipair connectors shall be compatible with industry standard 25-pair Jacks and Jack Assemblies: Modular, color-coded, eight-position modular receptacle units with integral IDC-type terminals. connectors while providing keyed category 3 connections with equipment using this feature. In addition, the connector design using crosstalk reduction techniques shall provide a 6 decibel margin to assure category 3 performance throughout systems that use multiple connectors. See following component requirements:
      a. Category 3 multipair cables: Comply with specifications in Category 3 Multipair Solutions.
      b. Category 3 multipair connectors:
         1) Comply with specifications above in Category 3 Multipair Solutions.

2.3 OPTICAL FIBER CABLE

A. Products: Subject to compliance with requirements, provide the following:
   1. Corning, Inc.

B. Description: Single mode 8.3/125-mircrometer, optical fiber cable.
   1. Comply with ICEA S-83-596 for mechanical properties.
   2. General Single mode Specifications: Cables shall be designed for point-to-point applications as well as mid-span access, and shall provide a high-level of protection for optical fiber installed in building environment and OSP applications:
      a. Higher optical fiber count cables shall utilize a sub-unitized design with color-coded subunits for easy identification.
      b. Single-mode optical fibers shall be 8.3 micrometers and use standard colored tight-buffered construction.
      c. The single-mode optical fiber shall be dispersion-unshifted optical fiber that meets ITU-T G.652c requirements.
      d. Cable shall provide optimum performance over entire wavelength range from 1260 to 1625 nanometers.
      e. Cable shall also support existing and legacy single mode applications that traditionally operate in 1310 and 1550 nanometer regions.
      f. Cable shall deliver a cost-effective upgrade path by expanding available wavelengths by 50 percent supporting 16 channels of coarse wave division multiplexing (CWDM) on a single optical fiber and up to 400 channels of dense wave division multiplexing (DWDM) on a single cable.

3. Basis of Design Specification for Single mode: Legrand, LLCsingle mode optical fiber.
4. Listed and labeled by an NRTL acceptable to authorities having jurisdiction as complying with UL 444, UL 1651, and NFPA 70 for the following types:
    a. General Purpose, Nonconductive: Type OFN or OFNG, or OFNR, OFNP.
    b. Plenum Rated, Nonconductive: Type OFNP, complying with NFPA 262.
    c. Riser Rated, Nonconductive: Type OFNR or OFNP, complying with UL 1666.
    d. General Purpose, Conductive: Type OFC or OFCG; or OFNG, OFN, OFCR, OFNR, OFCP, or OFNP.
    e. Plenum Rated, Conductive: Type OFCP or OFNP, complying with NFPA 262.
    f. Riser Rated, Conductive: Type OFCR; or OFNR, OFCP, or OFNP, complying with UL 1666.
5. Conductive cable shall be steel armored type for OSP loose tube metallic sheath and aluminum armored type for indoor armored type optical fiber cables.
6. Performance:
    a. Multimode Maximum Attenuation: 3.50 dB/km at 850 nm; 1.5 dB/km at 1300 nm.
    b. Multimode Minimum Modal Bandwidth: 2000 MHz-km at 850 nm; 500 MHz-km at 1300 nm.
    c. Single mode
7. Comply with following cable construction specifications by cable type:
    a. Indoor armored:
        1) Interlocking armor spiraling around premises distribution cable, with an overall sheath jacket to provide additional protection and security
        2) Available with Riser or Plenum-rated outer jacket
    b. OSP loose tube dielectric:
        1) Design: Dielectric design with MDPE sheath jacket and no metallic elements to provide environmental protection.
        2) Buffer tubes and optical fibers:
            a) Industry standard buffer tubes stranded around a central strength member and compatible with standard hardware, cable routing, and fan-out kits
            b) Optical fibers shall be industry-standard color coded and separated into 12-fiber color-coded binder groups surrounded by plastic core tubes
        3) Water blocking: Dry water-blocking compound suitable for underground conduit, direct burial, and aerial applications
    c. OSP loose tube metallic sheath:
        1) Design:
            a) Metallic sheath design with MDPE sheath jacket to provide environmental protection
            b) Metallic armor of corrugated polymer coated steel tape to provide added crush protection
            c) Armor shall meet Telcordia requirements for superior armored cable.
        2) Buffer tubes and optical fibers:
            a) Industry standard buffer tubes stranded around a central strength member and compatible with standard hardware, cable routing, and fan-out kits.
            b) Optical fibers shall be industry-standard color coded and separated into 12-fiber color-coded binder groups surrounded by plastic core tubes.
        3) Water blocking: Dry water-blocking compound suitable for underground conduit, direct burial, and aerial applications.
    d. Indoor/outdoor tight-buffered:
        1) Design: Dielectric design with fluoropolymer thermoplastic outer sheath jacket and no metallic elements to provide petrochemical resistance, flame propagation, and reduced smoke generation properties
        2) Optical fiber identification:
            a) Optical fibers shall be industry-standard color coded
            b) Water blocking: Dry water-blocking compound shall be suitable for underground conduit, direct burial, and aerial applications. Cable shall not contain gel, filling or flooding compound, grease or other flammable water blocking fluids. The aramid yarns shall be specially prepared with an agent that shall provide waterproof attribute of cable.
    e. Indoor/outdoor loose tube:
        1) Design: Dielectric design with fluoropolymer thermoplastic outer sheath jacket and no metallic elements to provide petrochemical resistance, flame propagation, and reduced smoke generation properties
        2) Buffer tubes and optical fibers:
            a) Industry standard buffer tubes stranded around a central strength member for protection against thermal expansion and contraction at operational temperature extremes
            b) Compatible with standard hardware, cable routing, and fan-out kits
            c) Optical fibers shall be industry-standard color coded and separated into 12-fiber color-coded binder groups surrounded by plastic core tubes.

3) Water blocking: Dry water-blocking compound shall be suitable for underground conduit, direct burial, and aerial applications.

f. OSP central tube dielectric:

1) Design: Dielectric design with medium-density polyethylene (MDPE) sheath jacket with longitudinal polyester ripcords and no metallic elements to provide environmental protection.

2) Buffer tubes and optical fibers:

a) Central tube of polybutylene terephthalate (PBT) material, containing all optical fibers, with 2 dielectric longitudinal outer strength members extending length of cable and industry-standard color coding.

3) Water blocking: Water-blocking compound shall be suitable for underground conduit, direct burial, and aerial applications.

g. OSP central tube metallic sheath:

1) Design:

a) Metallic sheath design with MDPE sheath jacket to provide environmental protection

b) Metallic armor of corrugated polymer coated steel tape to provide added crush protection

h. Buffer tubes and optical fibers: Central tube of PBT material, containing all optical fibers, with 2 metallic longitudinal outer strength members extending length of cable and industry-standard color coding.

i. Water blocking: Water-blocking compound shall be suitable for underground conduit, direct burial, and aerial applications.

C. Jacket:

1. Jacket Color: Aqua for 50/125-micrometer Listed cables installed within buildings.
2. Cable cordage jacket, fiber, unit, and group color shall be according to TIA/EIA-598-B.
3. Imprinted with fiber count, fiber type, and aggregate length at regular intervals not to exceed 40 inches.

2.4 OPTICAL FIBER CABLE HARDWARE

A. Products: Subject to compliance with requirements, provide the following:

1. Legrand, LLC

B. Cross-Connects and Patch Panels/Internal Sliding Shelf: Modular panels housing multiple-numbered, duplex cable connectors for multimode and single mode optical fiber cable.

1. General specifications: Panel shelves shall be used for combination of splicing and termination of optical fiber building cable or OSP cables. Shelf shall be designed for use as termination shelf only (direct connector termination) or as splice and termination shelf. Fiber splice and termination capacities shall be as specified in this section.
2. Optical fiber connector panel specifications: Provide connector types in simplex or duplex configurations. Panels shall accommodate 50 micrometer multimode, 62.5 micrometer multimode, and single mode optical fiber cabling. Comply with following specifications:
   a. Pre-populated panels with factory-installed adapters:
      1) Duplex: 6 or 12 adapters accommodating LC
      2) Simplex: 6 or 12 adapters accommodating LC
   b. Pre-terminated modules with pigtails: 12 LC adapters for all optical fiber cable types:
      1) LC modules shall contain 12 pigtails with colorized 0.9 millimeters tight-buffered cordages, following color sequence as defined by TIA standard.
3. Optical fiber termination module specifications: Modules shall support LC connectors and accommodate 50 micrometer multimode, 62.5 micrometer multimode, and single mode optical fiber cabling. Modules shall be either unterminated or equipped with pigtails ready for splicing. Provide interchangeable multimedia outlet bezels where specified to accommodate 4 outlets for M-series jacks for multimedia applications. Configurations shall be as follows:
   a. Unterminated modules: 12 LC adapters for all optical fiber cable types
   b. Pre-terminated modules with pigtails: 12 LC adapters for all optical fiber cable types:
      1) LC modules shall contain 12 pigtails with colorized 0.9 millimeters tight-buffered cordages, following color sequence as defined by TIA standard.
      2) SC and ST modules shall contain 6 pigtails with colorized 0.9 millimeters tight-buffered cordages, with following color sequence:
         a) Type A: blue, orange, green, brown, slate, and white
         b) Type B: red, black, yellow, violet, rose, and aqua
      3) Physical specifications:
         a) Ready™ 1U Internal Sliding Shelf, black 1U, 2U and 4U Configurations.

C. Optical Fiber Patch Cords: Factory-made, duplex-fiber cables.
   1. General Specifications: To maintain channel integrity, optical fiber patch cords and pigtails shall be fabricated to meet the performance parameters corresponding to the optical fiber cable approved product type specified below. Patch cord and pigtail plug connectors shall be equipped with boots, and shall have same colors as related optical fiber backbone cables, unless specified or indicated otherwise. Optical fiber patch cords and pigtails shall be available with the following options as specified or indicated:
      a) Termination types: LC.
      b) Connector/cable configuration: duplex.
      c) Listing rating: Riser, unless traveling through a plenum air space, then Plenum.
      d) Patch cord outside diameters: 1.6 millimeters (0.063 inches) and 3.0 millimeters (0.118 inches).
      e) Pigtails: Ruggedized and tight-buffered optical fiber—0.9 millimeters (0.035 inches) outside diameter.
      f) Lengths: As specified or indicated. Assume 3 meter if not specified otherwise.

D. Cable Connecting Hardware: Optical fiber connector types shall be provided in patch panels, patch cords, and workstation outlets for termination of optical fiber cables. Connectors shall be compatible with 50 micrometer multimode and single mode optical fiber cables. Connector colors shall be specified or selected by PSU's Representative from manufacturer's standard colors.:
   1. Comply with Optical Fiber Connector Intermateability Standards (FOCIS) specifications of TIA/EIA-604-2, TIA/EIA-604-3-A, and TIA/EIA-604-12. Comply with TIA/EIA-568-C.3.
   2. Quick-connect, simplex and duplex, Type LC connectors. Insertion loss not more than 0.75 dB.

2.5 GROUNDING

A. Comply with requirements in Section 270526 "Grounding and Bonding for Communications Systems" for grounding conductors and connectors.

B. Comply with ANSI-J-STD-607-A.

2.6 IDENTIFICATION PRODUCTS

A. Comply with TIA/EIA-606-A and UL 969 for a system of labeling materials, including label stocks, laminating adhesives, and inks used by label printers.

PART 3 - EXECUTION

3.1 ENTRANCE FACILITIES

A. Coordinate backbone cabling with the protectors and demarcation point provided by communications service provider.

3.2 WIRING METHODS

A. Wiring Method: Install cables in raceways and cable trays except within consoles, cabinets, desks, and counters and except in accessible ceiling spaces, in attics, and in gypsum board partitions where unenclosed wiring method may be used. Conceal raceway and cables except in unfinished spaces.
   1. Install plenum cable in environmental air spaces, including plenum ceilings.

B. Wiring Method: Conceal conductors and cables in accessible ceilings, walls, and floors where possible.

C. Wiring within Enclosures: Bundle, lace, and train cables within enclosures. Connect to terminal points with no excess and without exceeding manufacturer's limitations on bending radii. Provide and use lacing bars and distribution spools.

3.3 INSTALLATION OF CABLES

A. Comply with NECA 1.

B. General Requirements for Cabling:
   1. Comply with TIA/EIA-568-C.1.
   2. Comply with BICSI ITSIM, Ch. 6, "Cable Termination Practices."
   3. Install 110-style IDC termination hardware unless otherwise indicated.
   4. Terminate all conductors; no cable shall contain unterminated elements. Make terminations only at indicated outlets, terminals, cross-connects, and patch panels.
   5. Cables may not be spliced. Secure and support cables at intervals not exceeding 30 inches and not more than 6 inches from cabinets, boxes, fittings, outlets, racks, frames, and terminals.
   6. Install lacing bars to restrain cables, to prevent straining connections, and to prevent bending cables to smaller radii than minimums recommended by manufacturer.
   7. Bundle, lace, and train conductors to terminal points without exceeding manufacturer's limitations on bending radii, but not less than radii specified in BICSI ITSIM, "Cabling Termination Practices" Chapter. Use lacing bars and distribution spools.
   8. Do not install bruised, kinked, scored, deformed, or abraded cable. Do not splice cable between termination, tap, or junction points. Remove and discard cable if damaged during installation and replace it with new cable.
   9. Cold-Weather Installation: Bring cable to room temperature before dereeling. Heat lamps shall not be used for heating.
   10. In the communications equipment room, install a 10-foot- long service loop on each end of cable.
   11. Pulling Cable: Comply with BICSI ITSIM, Ch. 4, "Pulling Cable." Monitor cable pull tensions.

C. UTP Cable Installation:
   1. Comply with TIA/EIA-568-C.2.
   2. Do not untwist UTP cables more than 1/2 inch from the point of termination to maintain cable geometry.

D. Optical Fiber Cable Installation:
   1. Comply with TIA/EIA-568-C.3.
   2. Cable may be terminated on connecting hardware that is rack or cabinet mounted.

E. Open-Cable Installation:
   1. Install cabling with horizontal and vertical cable guides in telecommunications spaces with terminating hardware and interconnection equipment.
   2. Suspend UTP cable not in a wireway or pathway, a minimum of 8 inches above ceilings by cable supports not more than 60 inches apart.
   3. Cable shall not be run through structural members or in contact with pipes, ducts, or other potentially damaging items.

F. Installation of Cable Routed Exposed under Raised Floors:
   1. Install plenum-rated cable only.
   2. Install cabling after the flooring system has been installed in raised floor areas.
   3. Coil cable 6 feet long not less than 12 inches in diameter below each feed point.

G. Group connecting hardware for cables into separate logical fields.

H. Separation from EMI Sources:
   1. Comply with BICSI TDMM and TIA/EIA-569-A recommendations for separating unshielded copper voice and data communication cable from potential EMI sources, including electrical power lines and equipment.
   2. Separation between open communications cables or cables in nonmetallic raceways and unshielded power conductors and electrical equipment shall be as follows:
      a. Electrical Equipment Rating Less Than 2 kVA: A minimum of 5 inches.
      b. Electrical Equipment Rating between 2 and 5 kVA: A minimum of 12 inches.
      c. Electrical Equipment Rating More Than 5 kVA: A minimum of 24 inches.
   3. Separation between communications cables in grounded metallic raceways and unshielded power lines or electrical equipment shall be as follows:
      a. Electrical Equipment Rating Less Than 2 kVA: A minimum of 2-1/2 inches.
      b. Electrical Equipment Rating between 2 and 5 kVA: A minimum of 6 inches.
      c. Electrical Equipment Rating More Than 5 kVA: A minimum of 12 inches.
   4. Separation between communications cables in grounded metallic raceways and power lines and electrical equipment located in grounded metallic conduits or enclosures shall be as follows:
      a. Electrical Equipment Rating Less Than 2 kVA: No requirement.
      b. Electrical Equipment Rating between 2 and 5 kVA: A minimum of 3 inches.
      c. Electrical Equipment Rating More Than 5 kVA: A minimum of 6 inches.
   5. Separation between Communications Cables and Electrical Motors and Transformers, 5 kVA or HP and Larger: A minimum of 48 inches.
   6. Separation between Communications Cables and Fluorescent Fixtures: A minimum of 5 inches.

3.4 FIRESTOPPING

A. Comply with 270500, Common Work Results for Communications.

B. Comply with TIA/EIA-569-A, Annex A, "Firestopping."

C. Comply with BICSI TDMM, "Firestopping Systems" Article.

3.5 GROUNDING

A. Install grounding according to BICSI TDMM, "Grounding, Bonding, and Electrical Protection" Chapter.

B. Comply with ANSI-J-STD-607-A.

C. Locate grounding bus bar to minimize the length of bonding conductors. Fasten to wall allowing at least 2-inch clearance behind the grounding bus bar. Connect grounding bus bar with a minimum No. 4 AWG grounding electrode conductor from grounding bus bar to suitable electrical building ground. Distances over 66-feet required a 3/0 conductor.

D. Bond metallic equipment to the grounding bus bar, using not smaller than No. 6 AWG equipment grounding conductor.

3.6 IDENTIFICATION

A. Comply with requirements in specification 270500, Common Work Results for Communication.

3.7 FIELD QUALITY CONTROL

A. Perform tests and inspections.

B. Tests and Inspections:
   1. Visually inspect UTP and optical fiber jacket materials for NRTL certification markings. Inspect cabling terminations in communications equipment rooms for compliance with color-coding for pin assignments, and inspect cabling connections for compliance with TIA/EIA-568-C.1.
   2. Visually inspect cable placement, cable termination, grounding and bonding, equipment and patch cords, and labeling of all components.
   3. Test UTP copper cabling for DC loop resistance, shorts, opens, intermittent faults, and polarity between conductors. Test operation of shorting bars in connection blocks. Test cables after termination but not cross-connection.
      a. Test instruments shall meet or exceed applicable requirements in TIA/EIA-568-C.2. Perform tests with a tester that complies with performance requirements in "Test Instruments (Normative)" Annex, complying with measurement accuracy specified in "Measurement Accuracy (Informative)" Annex. Use only test cords and adapters that are qualified by test equipment manufacturer for channel or link test configuration.
   4. Optical Fiber Cable Tests:
   5. Test instruments shall meet or exceed applicable requirements in TIA/EIA-568-C.1. Use only test cords and adapters that are qualified by test equipment manufacturer for channel or link test configuration.
      a. Link End-to-End Attenuation Tests:
         1) Horizontal and multimode backbone link measurements: Test at 850 or 1300 nm in 1 direction according to TIA/EIA-526-14-A, Method B, One Reference Jumper.
         2) Attenuation test results for backbone links shall be less than 2.0 dB. Attenuation test results shall be less than that calculated according to equation in TIA/EIA-568-C.1.

C. Data for each measurement shall be documented. Data for submittals shall be printed in a summary report that is formatted similar to Table 10.1 in BICSI TDMM, or transferred from the instrument to the computer, saved as text files, and printed and submitted.

D. Remove and replace cabling where test results indicate that they do not comply with specified requirements.

E. End-to-end cabling will be considered defective if it does not pass tests and inspections.

F. Prepare test and inspection reports.

END OF SECTION 271300

SECTION 27 15 00 - COMMUNICATIONS HORIZONTAL CABLING

PART 1 - GENERAL

1.1 RELATED DOCUMENTS

A. Drawings and general provisions of the Contract, including General and Supplementary Conditions and Division 01 and Division 27 Specification Sections, apply to this Section.

B. Refer to appendices at the following hyperlink: https://www.pdx.edu/technology/telecom-infrastructure-wiring-standards

1.2 SUMMARY

A. Section Includes:
1. UTP cabling.
2. 50/125-micrometer, optical fiber cabling.
3. Multiuser telecommunications outlet assemblies.
4. Cable connecting hardware, patch panels, and cross-connects.
5. Telecommunications outlet/connectors.
6. Cabling system identification products.
7. Cable management system.

1.3 DEFINITIONS

A. See 270500, Common Work Results for Communications.

1.4 ADMINISTRATIVE REQUIREMENTS

A. Coordinate layout and installation of telecommunications cabling with PSU's telecommunications and LAN equipment and service suppliers.

B. Coordinate telecommunications outlet/connector locations with location of power receptacles at each work area.

1.5 ACTION SUBMITTALS

A. Comply with submittal requirements in Section 270500, Common Work Results for Communications.

B. Shop Drawings:
1. Wiring diagrams to show typical wiring schematics, including the following:
   a. Cross-connects.
   b. Patch panels.
   c. Patch cords.
2. Cross-connects and patch panels. Detail mounting assemblies, and show elevations and physical relationship between the installed components.

C. Samples: For workstation outlets, jacks, jack assemblies, in specified finish, one for each size and outlet configuration and faceplates for color selection and evaluation of technical features.

D. Delegated-Design Submittal: For seismic restraints.
1. Seismic-Restraint Details: Signed and sealed by a qualified professional engineer, licensed in the state where Project is located, who is responsible for their preparation.
2. Design Calculations: Calculate requirements for selecting seismic restraints.
3. Detail fabrication, including anchorages and attachments to structure and to supported cable trays.

1.6 CLOSEOUT SUBMITTALS

A. Maintenance Data: For splices and connectors to include in maintenance manuals.

B. Software and Firmware Operational Documentation per Closeout Submittals in Section 270500, Common Work Results for Communications.

1.7 QUALITY ASSURANCE

A. Comply with requirements of Quality Assurance in 270500.

1.8 DELIVERY, STORAGE, AND HANDLING

A. Test cables upon receipt at Project site.
   1. Test optical fiber cables to determine the continuity of the strand end to end. Use optical fiber flashlight or optical loss test set.
   2. Test optical fiber cables while on reels. Use an optical time domain reflectometer to verify the cable length and locate cable defects, splices, and connector; including the loss value of each. Retain test data and include the record in maintenance data.
   3. Test each pair of UTP cable for open and short circuits.

PART 2 - PRODUCTS

2.1 HORIZONTAL CABLING DESCRIPTION

A. Horizontal cable and its connecting hardware provide the means of transporting signals between the telecommunications outlet/connector and the horizontal cross-connect located in the communications equipment room. This cabling and its connecting hardware are called a "permanent link," a term that is used in the testing protocols.
   1. TIA/EIA-568-C.1 requires that a minimum of two telecommunications outlet/connectors be installed for each work area.
   2. Horizontal cabling shall contain no more than one transition point or consolidation point between the horizontal cross-connect and the telecommunications outlet/connector.
   3. Bridged taps and splices shall not be installed in the horizontal cabling.
   4. Splitters shall not be installed as part of the optical fiber cabling.

B. A work area is approximately 100 sq. ft., and includes the components that extend from the telecommunications outlet/connectors to the station equipment.

C. The maximum allowable horizontal cable length is 295 feet. This maximum allowable length does not include an allowance for the length of 16 feet to the workstation equipment or in the horizontal cross-connect.

D. PSU Description: Communications outlets for workstations and other end-user jack locations -- shall minimally consist of two gang wall plates equipped with two 8-pin modular (RJ-45) jacks. The preferred standard for communications outlets in new construction is four gang wall plates equipped with four 8-pin modular (RJ-45) jacks. The number of modular jacks per face plate shall be decided by the use of the area and with the approval of PSU OIT.

2.2 PERFORMANCE REQUIREMENTS

A. General Performance: Horizontal cabling system shall comply with transmission standards in TIA/EIA-568-C.1 when tested according to test procedures of this standard.

B. Surface-Burning Characteristics: Comply with ASTM E 84; testing by a qualified testing agency. Identify products with appropriate markings of applicable testing agency.

C. Electrical Components, Devices, and Accessories: Listed and labeled as defined in NFPA 70, by a qualified testing agency, and marked for intended location and application.

D. Grounding: Comply with J-STD-607-A.

2.3 BACKBOARDS

A. See Specification 271100, Communications Equipment Room Fittings

2.4 UTP CABLE

A. Products: Subject to compliance with requirements, provide the following:
   a. CommScope, Inc.

B. Description: 100-ohm, four-pair UTP, covered with a thermoplastic jacket, in color readily available from the manufacturer, typically blue or white.
   1. Comply with ICEA S-90-661 for mechanical properties.
   2. Comply with TIA/EIA-568-C.1 for performance specifications.
   3. Comply with TIA/EIA-568-C.2, Category 6 and Category 6A cables.
   4. Listed and labeled by an NRTL acceptable to authorities having jurisdiction as complying with UL 444 and NFPA 70 for the following types:
      a. Communications, Plenum Rated: Type CMP, complying with NFPA 262.
      b. Communications, Riser Rated: Type CMR; or CMP, complying with UL 1666.
   5. Horizontal to Desktop applications: Commscope Uniprise 75 series, Category 6-inch cable.
   6. Horizontal to Wireless Access Points and Data Intensive applications such as lab or data center applications: Commscope Uniprise 10G4 Category 6A cable.

2.5 UTP CABLE HARDWARE

A. Products: Subject to compliance with requirements, provide the following:
   1. Commscope, Inc.

B. General Requirements for Cable Connecting Hardware: Comply with TIA/EIA-568-C, IDC type, with modules designed for punch-down caps or tools. Cables shall be terminated with connecting hardware of same category or higher.

C. Patch Panel: Modular panels housing multiple-numbered jack units with IDC-type connectors at each jack for permanent termination of pair groups of installed cables.
   1. Number of Jacks per Field: One and one half for each four-pair UTP cable indicated.

D. Jacks and Jack Assemblies: Modular, color-coded, eight-position modular receptacle units with integral IDC-type terminals. Jack color shall be specified or selected by OIT representative from manufacturer’s standard colors.

E. Patch Cords: Factory-made, four-pair cables in 48-inch lengths; terminated with eight-position modular plug at each end.
   1. Patch cords shall have bend-relief-compliant boots and color-coded icons to ensure Category 6 performance. Patch cords shall have latch guards to protect against snagging.

2.6 OPTICAL FIBER CABLE

A. Products: Subject to compliance with requirements, provide the following:
   1. CommScope, Inc.
   2. See 271300 Communications Backbone Cabling for specific requirements of 50/125 laser optimized tight buffer and indoor/outdoor cable for horizontal application suitability.

2.7 OPTICAL FIBER CABLE HARDWARE

A. Products: Subject to compliance with requirements, provide the following:
   1. Commscope, Inc.
   2. See 271300 Communications Backbone Cabling for specific hardware requirements for horizontal application suitability

2.8 CONSOLIDATION POINTS

A. Products: Subject to compliance with requirements, provide the following:
   1. Commscope, Inc.; Uniprise.

B. Description: Consolidation points shall comply with requirements for cable connecting hardware.
   1. Number of Terminals per Field: One for each conductor in assigned cables.
   2. Number of Connectors per Field:
      a. One for each four-pair UTP cable indicated.
   3. Mounting: Recessed in ceiling or flush on wall, desk, or furniture depending on application.
   4. NRTL listed as complying with UL 50 and UL 1863.
   5. When installed in plenums used for environmental air, NRTL listed as complying with UL 2043.

2.9 MULTIUSER TELECOMMUNICATIONS OUTLET ASSEMBLY (MUTOA)

A. Products: Subject to compliance with requirements, provide the following:
   1. Commscope, Inc.; Uniprise.

B. Description: MUTOAs shall meet the requirements for cable connecting hardware.
   1. Number of Terminals per Field: One for each conductor in assigned cables.
   2. Number of Connectors per Field:
      a. One for each four-pair UTP cable indicated.
   3. Mounting: Recessed in ceiling or flush on wall, desk, or furniture depending on application.
   4. NRTL listed as complying with UL 50 and UL 1863.
   5. Label shall include maximum length of work area cords, based on TIA/EIA-568-C.1.
   6. When installed in plenums used for environmental air, NRTL listed as complying with UL 2043.

2.10 TELECOMMUNICATIONS OUTLET / CONNECTORS

A. Jacks: 100-ohm, balanced, twisted-pair connector; four-pair, eight-position modular. Comply with TIA/EIA-568-C.

B. Workstation Outlets: Two and Four-port-connector assemblies mounted in single or multigang faceplate.
   1. Plastic Faceplate: High-impact plastic. Coordinate color with PSU.
   2. Metal Faceplate: Stainless steel, complying with specific PSU project requirements .
   3. For use with snap-in jacks accommodating any combination of UTP, optical fiber, and coaxial work area cords.
      a. Flush mounting jacks, positioning the cord at a 45-degree angle
   4. Legend: Factory labeled by silk-screening or engraving for stainless steel faceplates.
   5. Legend: Machine printed, in the field, using adhesive-tape label.
   6. Legend: Snap-in, clear-label covers and machine-printed paper inserts.

2.11 GROUNDING

A. Comply with Specification 270526, Grounding and Bonding for Communications Systems.

B. Comply with J-STD-607-A.

2.12 IDENTIFICATION PRODUCTS

A. Comply with Specification 270500 Common Work Results for Communications.

B. Comply with TIA/EIA-606-A and UL 969 for labeling materials, including label stocks, laminating adhesives, and inks used by label printers.

2.13 CABLE MANAGEMENT SYSTEM

A. Comply with Specification 271100 Communications Equipment Room Fittings.

2.14 SOURCE QUALITY CONTROL

A. Testing Agency: PSU will engage a qualified testing agency to evaluate cables.

B. Factory test UTP and optical fiber cables on reels according to TIA/EIA-568-C.

C. Factory test UTP cables according to TIA/EIA-568-C.

D. Factory test multimode optical fiber cables according to TIA-526-14-A and TIA/EIA-568-C.

E. Cable will be considered defective if it does not pass tests and inspections.

F. Prepare test and inspection reports.

PART 3 - EXECUTION

3.1 WIRING METHODS

A. Install cables in pathways and cable trays except within consoles, cabinets, desks, and counters. Conceal pathways and cables except in unfinished spaces.
1. Install plenum cable in environmental air spaces, including plenum ceilings.
2. Comply with requirements in Section 270528 "Pathways for Communications Systems."
3. Comply with requirements in Section 270536 "Cable Trays for Communications Systems."

B. Conceal conductors and cables in accessible ceilings, walls, and floors where possible.

C. Wiring within Enclosures:
1. Bundle, lace, and train conductors to terminal points with no excess and without exceeding manufacturer's limitations on bending radii.
2. Install lacing bars and distribution spools.
3. Install conductors parallel with or at right angles to sides and back of enclosure.

3.2 INSTALLATION OF CABLES

A. Comply with NECA 1.

B. General Requirements for Cabling:
1. Comply with TIA/EIA-568-C.1.
2. Comply with BICSI ITSIM, Ch. 6, "Cable Termination Practices."
3. MUTOA shall not be used as a cross-connect point.
4. Consolidation points may be used only for making a direct connection to telecommunications outlet/connectors:
5. Do not use consolidation point as a cross-connect point, as a patch connection, or for direct connection to workstation equipment.
6. Locate consolidation points for UTP at least 49 feet from communications equipment room.
7. Terminate conductors; no cable shall contain unterminated elements. Make terminations only at indicated outlets, terminals, cross-connects, and patch panels.
8. Cables may not be spliced. Secure and support cables at intervals not exceeding 30 inches and not more than 6 inches from cabinets, boxes, fittings, outlets, racks, frames, and terminals.
9. Install lacing bars to restrain cables, to prevent straining connections, and to prevent bending cables to smaller radii than minimums recommended by manufacturer.
10. Bundle, lace, and train conductors to terminal points without exceeding manufacturer's limitations on bending radii, but not less than radii specified in BICSI ITSIM, "Cabling Termination Practices" Chapter. Install lacing bars and distribution spools.
11. Do not install bruised, kinked, scored, deformed, or abraded cable. Do not splice cable between termination, tap, or junction points. Remove and discard cable if damaged during installation and replace it with new cable.
12. Cold-Weather Installation: Bring cable to room temperature before de-reeling. Heat lamps shall not be used for heating.
13. In the communications equipment room, install a 10-foot- long service loop on each end of cable.
14. Pulling Cable: Comply with BICSI ITSIM, Ch. 4, "Pulling Cable." Monitor cable pull tensions.

C. UTP Cable Installation:
   1. Comply with TIA/EIA-568-C.
   2. Do not untwist UTP cables more than 1/2 inch from the point of termination to maintain cable geometry.

D. Optical Fiber Cable Installation:
   1. Comply with TIA/EIA-568-C.
   2. Cable may be terminated on connecting hardware that is rack or cabinet mounted.

E. Open-Cable Installation:
   1. Install cabling with horizontal and vertical cable guides in telecommunications spaces with terminating hardware and interconnection equipment.
   2. Suspend UTP cable not in a wireway or pathway a minimum of 8 inches above ceilings by cable supports not more than 60 inches apart.
   3. Cable shall not be run through structural members or in contact with pipes, ducts, or other potentially damaging items.

F. Installation of Cable Routed Exposed under Raised Floors:
   1. Install plenum-rated cable only.
   2. Install cabling after the flooring system has been installed in raised floor areas.
   3. Coil cable 6 feet long not less than 12 inches in diameter below each feed point.

G. Group connecting hardware for cables into separate logical fields.

H. Separation from EMI Sources:
   1. Comply with BICSI TDMM and TIA-569-B for separating unshielded copper voice and data communication cable from potential EMI sources, including electrical power lines and equipment.
   2. Separation between open communications cables or cables in nonmetallic raceways and unshielded power conductors and electrical equipment shall be as follows:
      a. Electrical Equipment Rating Less Than 2 kVA: A minimum of 5 inches.
      b. Electrical Equipment Rating between 2 and 5 kVA: A minimum of 12 inches.
      c. Electrical Equipment Rating More Than 5 kVA: A minimum of 24 inches.
   3. Separation between communications cables in grounded metallic raceways and unshielded power lines or electrical equipment shall be as follows:
      a. Electrical Equipment Rating Less Than 2 kVA: A minimum of 2-1/2 inches.
      b. Electrical Equipment Rating between 2 and 5 kVA: A minimum of 6 inches.
      c. Electrical Equipment Rating More Than 5 kVA: A minimum of 12 inches.
   4. Separation between communications cables in grounded metallic raceways and power lines and electrical equipment located in grounded metallic conduits or enclosures shall be as follows:
      a. Electrical Equipment Rating Less Than 2 kVA: No requirement.
      b. Electrical Equipment Rating between 2 and 5 kVA: A minimum of 3 inches.
      c. Electrical Equipment Rating More Than 5 kVA: A minimum of 6 inches.
   5. Separation between Communications Cables and Electrical Motors and Transformers, 5 kVA or HP and Larger: A minimum of 48 inches.
   6. Separation between Communications Cables and Fluorescent Fixtures: A minimum of 5 inches.

3.3 FIRESTOPPING

A. Comply with Specification 270500 Common Work Results for Communications.

B. Comply with TIA-569-B, Annex A, "Firestopping."

C. Comply with BICSI TDMM, "Firestopping Systems" Article.

3.4 GROUNDING

A. Install grounding according to BICSI TDMM, "Grounding, Bonding, and Electrical Protection" Chapter.

B. Comply with J-STD-607-A.

C. Locate grounding bus bar to minimize the length of bonding conductors. Fasten to wall allowing at least 2-inch clearance behind the grounding bus bar. Connect grounding bus bar with a minimum No. 4 AWG grounding

electrode conductor from grounding bus bar to suitable electrical building ground. Lengths over 66-feet require a 3/0 conductor.

D. Bond metallic equipment to the grounding bus bar, using not smaller than No. 6 AWG equipment grounding conductor.

3.5 IDENTIFICATION

A. Comply with requirements in specification 270500, Common Work Results for Communication.

3.6 FIELD QUALITY CONTROL

A. Perform the following tests and inspections:
   1. Visually inspect UTP and optical fiber cable jacket materials for NRTL certification markings. Inspect cabling terminations in communications equipment rooms for compliance with color-coding for pin assignments, and inspect cabling connections for compliance with TIA/EIA-568-C.1.
   2. Visually confirm Category 6 and Category 6A, marking of outlets, cover plates, outlet/connectors, and patch panels.
   3. Visually inspect cable placement, cable termination, grounding and bonding, equipment and patch cords, and labeling of all components.
   4. Test UTP backbone copper cabling for DC loop resistance, shorts, opens, intermittent faults, and polarity between conductors. Test operation of shorting bars in connection blocks. Test cables after termination but not cross-connection.
      a. Test instruments shall meet or exceed applicable requirements in TIA/EIA-568-C. Perform tests with a tester that complies with current TIA standards.
   5. Optical Fiber Cable Tests:
      a. Test instruments shall meet or exceed applicable requirements in TIA/EIA-568-C. Use only test cords and adapters that are qualified by test equipment manufacturer for channel or link test configuration.
      b. Link End-to-End Attenuation Tests:
         1) Horizontal and multimode backbone link measurements: Test at 850 or 1300 nm in 1 direction according to TIA-526-14-A, Method B, One Reference Jumper.
         2) Attenuation test results for backbone links shall be less than 2.0 dB. Attenuation test results shall be less than that calculated according to equation in TIA/EIA-568-C.
   6. UTP Performance Tests:
      a. Test for each outlet and MUTOA. Perform the following tests according to TIA/EIA-568-C:
         1) Wire map.
         2) Length (physical vs. electrical, and length requirements).
         3) Insertion loss.
         4) Near-end crosstalk (NEXT) loss.
         5) Power sum near-end crosstalk (PSNEXT) loss.
         6) Equal-level far-end crosstalk (ELFEXT).
         7) Power sum equal-level far-end crosstalk (PSELFEXT).
         8) Return loss.
         9) Propagation delay.
         10) Delay skew.
   7. Optical Fiber Cable Performance Tests: Perform optical fiber end-to-end link tests according to TIA/EIA-568-C.1 and TIA/EIA-568-C.3.

B. Document data for each measurement. Data for submittals shall be printed in a summary report that is formatted similar to Table 10.1 in BICSI TDMM, or transferred from the instrument to the computer, saved as text files, and printed and submitted.

C. End-to-end cabling will be considered defective if it does not pass tests and inspections.

D. Prepare test and inspection reports.

3.7 DEMONSTRATION

A. Train PSU's maintenance personnel in cable-plant management operations, including changing signal pathways for different workstations, rerouting signals in failed cables, and keeping records of cabling assignments and revisions when extending wiring to establish new workstation outlets.

END OF SECTION 271500

SECTION 28 10 00 - ACCESS CONTROL

PART 1 - GENERAL

1.1 SUMMARY

A. Portland State University has chosen to standardize on the Lenel OnGuard Security Management Software System (“The system”) for electronic access control and intrusion.
   1. The system provided as part of any new project will utilize the existing application server maintained by the PSU Office of Information Technology (OIT).
   2. The provided system will be documented to allow the Facilities and Property Management (FPM) department to service the system as needed.

B. Contractor to provide, install, and activate access control low voltage cabling and devices.

C. Contractor to provide complete installation including conduit, boxes, and labeling of wires and panels for card readers. Fire caulking, patching, and paint is to be provided by contractor to complete installations. Box or data ring required.

D. Related Sections
   1. Div. 08 - Door, Frame, & Window standards for access control related door hardware requirements.
   2. Div. 28 - Security Cameras.

1.2 CODE REQUIREMENTS

A. All installed access control shall comply with NFPA and ADA requirements including, but not limited to, integration with the fire system to initiate door release during activation of the fire system. Additional consideration shall be given, during the design and installation, to improvement of accessibility for users of the system where such changes do not conflict with other requirements in this section.

1.3 COORDINATION

A. Monitoring of and daily operational control of the system will be provided by the Campus Public Safety Office (CPSO) Access Control Team.

B. Installation, repair, or other work done on the system must be performed by factory certified technical personnel and coordinated with the CPSO Physical Security Manager and Access Control Team.

C. The Physical Security Manager will be responsible for coordinating with FPM, Capital Projects and Construction (CPC), the Access Control Team, and OIT as appropriate depending on the scope of the work to be performed and the areas of the system it will impact.

D. For projects initiated through CPC, the assigned Project Manager will be responsible for engaging and coordinating with the Physical Security Manager at the outset of the design of the project to ensure the proposed systems and solutions are compliant with the campus standards and accessibility requirements.

1.4 DESIGN GUIDANCE AND REQUIREMENTS

A. Portland State University maintains a managed spares program to support these systems.
   1. Any device that is being replaced or repaired under warranty shall be returned to the University to be placed in stock unless the installer provided the replacement outside of the managed spares maintained by the University.

B. Access control, door hardware, and intrusion components shall be ordered with wiring harness or “pigtails” where possible. Removal of connectors to “solder and tape” connections is not permitted.

C. Access control equipment (e.g. panels, enclosures, power supplies, etc.) shall be located centrally in a telecom or electrical closet whenever possible. Alternate locations will be selected by the Physical Security Manager in collaboration with FPM and OIT representatives.

D. Unless otherwise stipulated, contractor shall provide all conduit, boxes, and other cabling pathway. Contractor is responsible for fire caulking, patching, and painting, if required.

E. Access control system and intrusion shall be Lenel OnGuard. Verify version information and compatibility at time of proposal.

1.5 SUBMITTALS AND DOCUMENTATION

A. Portland State University shall provide any existing as-built documentation for security systems to be included as part of the as-built drawings indicated below.

B. Contractor shall provide as-built drawings of all installed systems, to include but not limited to:
1. Floor plans with device locations labeled with format to match cable labeling and to include name of device in supporting software.
2. Wiring diagrams for each type of device or panel installed.
3. Detail diagrams illustrating installation of equipment within space.
4. Riser diagram showing cabling topology across all floors. This may be marked “Not Used” and left blank if the project only includes work on a single floor.

PART 2 - PRODUCTS

2.1 CONTROLLERS

A. Intelligent Controller: LNL-X4420

B. Door Controller: LNL-1320, Series 3.
1. Single opening door controllers (LNL-1300, Series 3) are not permitted without prior authorization from the Physical Security Manager, and only when the equipment is being installed in a location where no additional doors may be added to the system.

C. Input Control Module: LNL-1100, Series 3.

D. Output Control Module: LNL-1200, Series 3.

E. Note: if a new series or version of controller is released, PSU shall have the option to elect to use those updated controllers for any new project. The installing contractor will alert the Physical Security Manager and will be advised on which product may be use.

2.2 ENCLOSURES

A. Altronix Trove

B. nVent Hoffman

C. Enclosures will be sized to support the most expansion possible within the available space at the location of installation. Enclosures sized to fit a single control panel are not permitted.

D. Enclosures shall have a tamper switch installed and connected to the closest control panel and programmed to trigger an alarm in the management software.

E. Enclosures shall be keyed to the standardized cabinet key for access control enclosures at the University. Contact the PSU Lock Shop for keying information.

2.3 POWER SUPPLIES

A. Altronix.

B. Von Duprin/Schlage (permitted for locking hardware only)
   1. Model: PS914 or PS900 series.

C. All lock power shall be isolated from the control board by removable fuse and relay or fuse and relay distribution board.

2.4 BATTERIES

A. Provide batteries sufficiently sized to provide 12 hours of operation after loss of AC power.

B. Batteries shall be labeled with date of installation.

C. The installer shall provide a copy of battery calculations, prior to order of equipment, to be approved by the Physical Security Manager.

D. A physical copy of the most current battery calculations shall be provided at the location of installation.

E. Battery Manufacturer:
   1. Interstate
   2. PowerSonic
   3. Or approved alternative

2.5 CARD READERS

A. Single Gang Reader: Schlage MTB15, HID Signo40 Reader, or Physical Security Manager approved alternate.
   1. Mullion Reader: Schlage MTB11, HID Signo20 Reader, or Physical Security Manager approved alternate.

B. Single Gang Reader with Keypad: Schlage MTKB15, HID Signo40K Reader, or Physical Security Manager approved alternate.
   1. Keypad readers shall be used for any readers where additional security is required (ability to enable “card and pin” is needed).
   2. Construction projects that include the first floor of a building shall include one keypad reader on the first-floor data closet of each building where one is not already installed.
   3. Keypad readers shall not be used on exterior doors without approval by the Physical Security Manager.
   4. Mullion Reader: HID Signo20K or Physical Security Manager approved alternate.

C. Wiring harness or “Pigtail” reader configurations shall be used. Connector shall not be removed from the reader. Removal of the connector and cutting, soldering, and taping is not permitted.

D. Readers shall be connected using OSDP protocol. Weigand is not permitted.

E. Readers shall not have branding or logos except for those included in the base design of the product by the manufacturer.

F. Reader that is fastened to the mount by screws will use tamper/vandal resistant screws provided by the manufacturer.

G. Reader tamper shall be connected and programmed to trigger an alarm in the monitoring software.

H. Each reader shall be commissioned into the PSU Engage Account for configuration and ongoing support. The installing contractor shall be provided with access to the PSU Engage Account for this purpose.

2.6 WIRELESS LOCKS

A. Wireless locks may only be used in applications where wiring is prohibited due to the historical status of the building or where it is impossible or impractical to provide cabling in a retro-fit project. The Physical Security Manager must authorize the use of wireless locks based on impossibility or impracticality.

B. A wireless survey using a manufacturer-provided survey kit shall be performed to ensure there are no issues with interference, construction materials, or range prior to completion of an estimate for installation of wireless locks.

C. Wireless locks shall not be used in new construction.

D. Schlage AD-400. Not used for student housing.

E. Schlage NDE/LE - May only be used for existing internal doors providing access to offices or resident rooms in housing applications. The distance between the lock and wireless controller for NDE/LE applications shall not exceed 30 feet.

2.7 REQUEST TO EXIT (REX) DEVICES

A. Where possible, Request to Exit signaling shall be provided by devices integrated into door hardware (see Division 8).

B. Roll-Up Gate motors shall be wired such that floor loops will trigger the REX input for the gate unless approved alternate by the PM is used.

C. If door hardware with an integrated REX is not feasible, the following PIR REX shall be used.
1. Manufacturer: Bosch
2. Model: DS160
3. Aim PIR sensor to minimize potential for activation from outside the door while making every effort to eliminate nuisance door forced alarms

2.8 DOOR CONTACTS

A. When possible, recessed magnetic contacts should be used. Surface-mounted contacts may be used if required by construction of the door.

B. All door contacts shall be rated for use on fire-rated door assemblies.

C. Surface mounted door contacts will be rated for “heavy duty use” and include an armored cable.

D. Door contacts shall be Normally Closed (N.C.) Single-Pole, Single Throw unless otherwise indicated and approved by the Physical Security Manager

E. All doors connected to the access control system shall have a contact installed unless approved by the Physical Security Manager.

F. Door contacts shall be physically connected to control panels in all new construction and whenever possible in renovation or retro-fit. Wireless door contacts are permissible only when required by construction conditions and with the approval of the Physical Security Manager.

G. Wired Door Contacts
1. Manufacturer:
   a. Nascom
   b. George Risk Industries
   c. Optex

H. Wireless Door Contacts
1. Manufacturer:
   a. Inovonics
   b. Optex

2.9 CABLING

A. Manufacturer
1. Windy City
2. West Penn

3. Superior Essex
4. Paige Datacom Solutions

B. Access Composite Cable
1. Manufacturer
   a. Superior Essex
2. Installer shall use access composite cable for any door receiving three or more devices. Unused conductor elements of composite cable shall be labeled at both ends for future use.
3. Conductor elements for card reader connection shall be three twisted-pair conductors with an overall shield.
4. Conductor elements for door contact, REX, and door power shall be unshielded unless electromagnetic interference is anticipated to be a significant factor along the cable pathway.
5. Composite cable shall have an outer jacket. If an existing pathway will not support cable of that size, the installer may petition the University to use un-jacketed composite cable. The Physical Security Manager must approve such use in writing and a copy of that approval shall be retained by CPSO and CPC.
6. The outer jacket shall be green in color, if available from the approved manufacturer. Yellow is acceptable if green is unavailable in the proper environmental rating.
7. The outer jacket of outdoor, wet-rated cable assemblies shall be black in color.

C. Single-Assembly Cables
1. The installer shall use the following cables for the specified applications:
   a. Lock Power
      1) Up to 200’ - 18 AWG 2 Conductor unshielded cable.
      2) Greater than 200’ - 16 AWG 2 Conductor unshielded cable.
   b. Door Contact
      1) 22 AWG 2 Conductor unshielded cable.
   c. REX Device
      1) 22 AWG 4 Conductor unshielded cable.
   d. Card Reader
      1) 22 AWG 3 Pair shielded cable. (Only use when Card Reader is one of two or fewer devices at the location, otherwise composite cable is required.)

D. All penetrations and conduit ends shall be protected by a plastic bushing to protect cabling from edges of any construction material.

E. Identification
1. Cable shall be labeled with machine-printed labels within 4 inches of termination on each end and just inside the point of entry in each enclosure. In composite cable assemblies, each individual sub-assembly shall be labeled to indicate which device at the location the subassembly supports. Hand-written labeling is not permitted.
2. Label shall contain room number of the other end of the cable (device or backend) and either device type or port/panel number.

F. Cabling shall be dressed and secured with hook and loop tape.
1. Zip ties or similar single-use cable management tools are not permitted.
2. Cables shall not be compressed and the jacket shall not be deformed or discolored by cable management.
3. Inside enclosures, cable management may use hook and loop tape or Panduit Panduct Type F with covers. Hook and loop tape is not required within Panduct.

2.10 INTRUSION DETECTION

A. Manufacturer
1. Control Panels
   a. Lenel
2. Keypads
   a. Lenel
3. Motion Detectors
   a. Manufacturer: Bosch
      1) Ceiling: DS939
      2) Wall: ISC-PDL1-W18x
      3) Wall, Long-Range: DS778
4. Glass Break Detectors
   a. Manufacturer: Bosch

1) DS1101i
5. Photoelectric Beam
   a. Manufacturer: Bosch
      1) ISC-FPB1-W30DS
6. Seismic/Shock Sensors
   a. Requires coordination with the Physical Security Manager.
   b. Manufacturer: Bosch
      1) ISN-SM-50

2.11 SECURITY CAMERAS

A. Manufacturer: Hanwha-Techwin or Physical Security Manager approved alternate.
   1. Single Sensor Camera
      a. Model: X-Series
   2. Multisensor Camera
      a. Model: PNM Series

B. If required features are not available from the specified manufacturer, the Physical Security Manager must provide an approved alternate.

C. Cameras shall meet the following minimum requirements
   1. Prior to ordering any camera equipment, the installer shall provide a camera schedule including but not limited to manufacturer, model, resolution, frame rate, compression and anticipated storage calculation. This schedule must be reviewed by the Physical Security Manager and OIT prior to ordering of any equipment.
   2. 2MP or higher resolution per sensor, resolution shall not be set below maximum capability of camera unless approved by Physical Security Manager, and must maintain a minimum of 35 pixels per foot in the primary target area.
   3. Capable of 30 FPS, configured to 10 FPS.
   4. Compression: H.265.
   5. Dome-style housings only, bullets and boxes are not permitted.
   6. PoE with 24V DC input option.
   7. Heater and blower for outdoor cameras exposed to the elements.

2.12 DURESS BUTTONS

1. Manufacturer: United Security Products, Inc
   a. Model HUB2A
   b. Approved alternate by the Physical Security Manager

2.13 INTERCOMS:

1. Case by case basis as approved by Physical Security Manager.

PART 3 - EXECUTION

3.1 EXTERIOR DOORS

A. All exterior doors that do not provide access to a self-contained space (i.e. electrical room or mechanical space with no pedestrian passage into the rest of the building) with mechanical key lock assemblies shall be keyed to the restricted override key for emergency responders.

B. All exterior doors will be provided with a door contact.

C. Any exterior door that is not designated an “emergency exit only” shall also be provided a request to exit device.

D. Any exterior doors which may reasonably be expected to be unlocked during the day shall have electronic locking hardware installed to allow doors to be scheduled and locked down remotely during an emergency event.

E. All exterior doors that will serve as all-hours entry to the building shall be provided with the above components as well as a card reader for access while the building is closed.

F. Exterior doors shall not be secured by magnetic locks. Use of electric strikes on exterior doors is only permitted when access control is being added to existing structures and must be reviewed and approved by the Physical Security Manager.

G. Include “Swipe Badge for Building Access” sign with swipe logo, install above or adjacent to card reader. Install swipe access sticker on entry door that opens with card access, install near handle. The pair of signs / stickers should be included at main entrances, especially areas with multiple doors where it may not be evident which door unlocks when badge is swiped. Not required at single doors or where unlatching may be obvious. (See image in Section 101400, Signs will be included in sign standards when it is next updated.)

3.2 INTERIOR DOORS

A. Entry doors into office suites and lab spaces will be provided with a card reader, door position switch, request-to-exit device (may be integrated into door hardware, see Division 8), and associated electronic door hardware. All access control doors and secondary entrances into these spaces will be secured such that only emergency responders with a restricted override key may access them.

B. Doors to all telecommunications closets will be provided with a card reader, door position switch, request-to-exit device, and associated electronic door hardware.

C. Computer labs and other spaces where student access is regularly expected and standard shall be provided with a card reader, door position switch, request-to-exit device, and associated electronic door hardware. The Physical Security Manager or designee shall be consulted in any case where it is unclear whether student access is regularly expected and standard.

D. Bicycle Parking doors and gates shall be provided with a card reader, door position switch, request-to-exit device, and associated electronic door hardware. Door and gate construction shall prevent the use of tools or improvised devices in manipulating the exit device to effect entry. May include plexiglass around door hardware, reinforced mesh-style materials, and/or “boxing in” the crash bar.

E. Gates and doors into parking areas with a secure perimeter shall be provided with a card reader, door position switch, request-to-exit device, and associated electronic door hardware or loops (as appropriate)

F. Magnetic locks shall not be used to secure interior doors unless approved in advance by the Physical Security Manager. Approval will only be granted in situations where replacement of the door to allow for approved hardware is impractical or impossible, and where the failure of the magnetic lock during a power loss event or by defect will not present a significant and unacceptable risk to the space. When magnetic locks are used, emergency exit button or pull, and/or tie in with the fire system must be used.

3.3 DURESS BUTTONS

A. Duress buttons, aka “panic buttons,” are required for any area where cash is handled.

B. Any other location for a panic or duress button must be coordinated with the Physical Security Manager and the installation and programming of the button and the associated camera (see Div. 28 Security Cameras) will be funded by the requesting department.

C. Security camera overseeing duress button area is required.

3.4 INTRUSION DETECTION

A. Intrusion detection shall be managed through Lenel OnGuard. Intrusion equipment will be connected to the above listed Input Control and Output Control Modules and programmed within OnGuard.

B. Cabling shall comply with Cabling products specified above and sized and with a conductor count meeting the requirements of the manufacturer.

C. Intrusion Detection shall be provided for any spaces where currency, tangible personal property, financial documents, or protected records are stored.

D. Areas of buildings that require Intrusion Detection as described above, and where persons outside of the building may reasonably gain entry by means of smashing glass windows or doors (i.e. at the ground level) shall be provided with glass-break sensors.

E. Areas where the space is regularly and routinely occupied throughout the day and night shall not be provided with intrusion detection systems except where required due to the nature of the space. Such spaces shall be reviewed with the Physical Security Manager to ensure the design conforms to the usage of the space. Installation must be approved by CPC Project Manager.

3.5 SECURITY CAMERAS

A. Cameras shall be integrated with the existing Milestone Video Management System (VMS). The contractor is responsible for providing the camera, licensing, aim and focus, and commissioning of each camera. Video storage will be provided by the owner.

B. Design Guidance and Requirements
   1. Camera Location Requirements:
      a. Cameras shall be installed to provide surveillance of all points of entry and exit from a building.
      b. Cameras shall be included to provide surveillance of areas of public use where natural surveillance is impaired or reduced by design elements.
      c. Cameras shall be included in areas where cash is handled or any other items of value are stored or exchanged.
      d. Cameras shall be installed to provide surveillance of all new duress or panic buttons.
   2. Whenever possible, cameras shall be positioned and configured to address multiple areas of interest as noted above.
      a. Cameras that utilize multiple sensors or an expanded field of view are permitted, and preferred, with the approval of the Physical Security Manager.
      b. PTZ cameras shall not be used unless the installer is provided with written authorization from the Physical Security Manager.

END OF SECTION 281000

SECTION 28 46 00 - FIRE DETECTION AND ALARM

PART 1 - GENERAL

1.1 SUMMARY

A. The Silent Knight Farenhyt Series IFP-2100ECS or IFP-2100 24VDC analog addressable fire alarm system with IDP protocol addressable initiation devices and System Sensor two-wire synchronized notification devices is the Portland State University standard for Fire Alarm Systems.
   1. If the building is considered a high rise, provide an FCI Fire Panel and compatible field devices. For high rise and smoke control, use notifier Inspire product 1000 xr.

B. The Silent Knight Select Farenhyt Engineered Systems Distributor shall furnish all labor, materials, appliances, cabling, tools, equipment, facilities, transportation, and services necessary for and incidental to the performance of all operations in connection with furnishing, delivery, and installation of all equipment, cabling, programming, configuration, testing, and training required by this Section, complete as indicated in the applicable Contract Drawings and/or specified herein.

C. This specification provides the requirements for the installation, programming, configuration, testing, and maintenance of a complete analog addressable fire alarm system. This system shall include, but shall not be limited to:
   1. Main Fire Alarm Control Panel (FACP)
      a. Network Nodes (on network systems only)
         1) Network Interface Module
         2) Fiber optic or copper network connection circuits
      b. System cabinet
      c. Power supply
   2. Digital Signaling Line Circuits (SLC)
   3. Notification Appliance Circuits (NAC)
   4. RS-485 Serial Communication Bus (S-bus)
   5. Annunciators both integral and remote
   6. Batteries
   7. Wiring
   8. Conduit
   9. Associated peripheral devices and modules
   10. Other relevant components and accessories required to furnish and install a complete and operational fully automatic, addressable reporting Life Safety System.
   11. Fire alarm must be tied into access control to release doors.
   12. Fire alarm panels or sub-panels shall not be installed in private offices.

D. The fire alarm system shall be capable of providing, at a minimum, the following:
   1. Fire Alarm Control Panel (FACP)
      a. Integral Digital Alarm Communications Transmitter (DACT). Napco Starlink Alarm communicator or approved equal.
      b. Network Interface capability via copper and/or fiber optic network.
   2. Analog addressable initiation devices
   3. Analog addressable monitor and/or control modules
   4. Notification appliances
      a. System Sensor.
   5. Notification Appliance Circuit (NAC) remote power supply
      a. RPS-1000 Remote Power Supply shall provide the capability of housing the 5815XL SLC Expander for remote SLC generation.
      b. Combination horn/strobe two-wire circuit.
      c. Built-in synchronization capabilities
   6. Integral Voice Evacuation capability
   7. Firefighter Telephone capability
   8. If smoke control is determined to be required by PM and/or AHJ, Honeywell (Gamewell-FCI or approve equal) to be integrated with all control systems.
      a. Control systems include but not limited to HVAC, access control, all suppression systems, sprinkler systems, etc.

E. Any material and/or equipment necessary for the proper operation of the system, which is not specified or described herein, shall be deemed part of this Specification.

F. Mini Monitor Modules are not allowed.

G. The Analog Addressable Fire Alarm System specified herein shall be connected to a UL Listed Central Station Monitoring Company provided by Portland State University.

H. Points lists with descriptions will be provided to Portland State University.

1.2 QUALIFICATIONS

A. Equipment
1. The equipment installer should have at least three (3) years experience.
   a. Equipment provided for this project shall be the product of Silent Knight Farenhyt by Honeywell.
2. All equipment shall conform to currently adopted applicable codes and ordinances.
3. All equipment shall bear the label of a Nationally Recognized Testing Laboratory (NRTL) such as Intertek Testing Services NA, Inc. (ITSNA - formerly ETL) or Underwriters Laboratories Inc. (UL) and be listed by their re-examination service.

B. System Supplier/Installer

The system shall be furnished and installed by a Silent Knight Select Farenhyt Engineered Systems Distributor who is trained and certified by the Manufacturer in the proper installation, programming, configuration, testing, service, and maintenance of the systems specified herein.

1.3 APPLICABLE CODES & STANDARDS

A. The Fire Alarm System shall comply with the currently adopted versions of the following:
1. Building Standards Administrative Code, Part 1, Title 24,
2. Oregon Fire Codes
3. International Fire code with Oregon Amendments

B. NFPA Standards
1. The fire alarm system shall comply with the applicable provisions of the following current National Fire Protection Association (NFPA) standards:
   a. NFPA 12 Carbon Dioxide Extinguishing Systems
   b. NFPA 12A Halon 1301 Fire Extinguishing Systems
   c. NFPA 13 Installation of Sprinkler Systems
   d. NFPA 15 Water Spray Fixed Systems
   e. NFPA 16 Deluge Foam-Water Sprinkler Systems
   f. NFPA 16A Installation of Closed Head Foam-water Sprinkler Systems
   g. NFPA 17 Dry Chemical Extinguishing Systems
   h. NFPA 17A Wet Chemical Extinguishing Systems
   i. NFPA 72, National Fire Alarm Code:
      1) Central Station Fire Alarm Systems
      2) Local Fire Alarm Systems
      3) Auxiliary Fire Alarm Systems
      4) Remote Station Fire Alarm Systems
      5) Proprietary Fire Alarm Systems
   j. NFPA 70, National Electrical Code
   k. NFPA 90A, Installation of Air Conditioning and Ventilating Systems
   l. NFPA 101, Life Safety Code - Safety to Life from Fire in Buildings and Structures
   m. NFPA 750 Water Mist Fire Protection Systems
   n. NFPA 2001 clean Agent fire Extinguishing Systems

C. ADA - Americans with Disabilities Act

D. U.L. Standards
1. The system shall comply with the applicable provisions of the following U.L. Standards and Classifications:
   1) UL 38, Manually Activated Signaling Boxes
   2) UL 268, Smoke Detectors for Fire Alarm Signaling Systems
   3) UL 268A, Smoke Detectors for Duct Applications
   4) UL 346, Water-flow indicators for Fire Protective Signaling Systems
   5) UL 464, Audible Signal Appliances

6) UL 521, Heat Detectors for Fire Protective Signaling Systems
7) UL 864, Control Units for Fire Protective Signaling Systems
8) UL 1481 Power Supplies for Fire Alarm Systems
9) UL 1635, Standard for Digital Alarm Communicator System Units
10) UL 1638, Visual Signaling Appliances
11) UL 1971, Emergency Devices for the Hearing Impaired
12) UOJZ, Control Units, System
13) SYZV Control Units, Releasing Device
14) UOXX, Control Unit Accessories, System
15) SYSW Accessories, Releasing Device Service

1.4 CONTRACT CLOSE-OUT REQUIREMENTS

A. Contractor shall provide the following documentation:
1. One PDF or AutoCAD drawings of project record drawings.
2. Three hard copies of manufacturer's maintenance and operation manuals and/or PDFs of all materials.
3. One thumb drive in fire alarm panel with all manuals and O&M data.
4. Three copies of system warranty and/ or PDFs.

B. Training
1. In-Service Training - The Contractor shall instruct personnel designated by the Owner in the proper use, basic care and maintenance of the system beyond the warranty period. Contractor shall provide in-service training with this system
2. Factory Training & Certification - When requested by Owner, provide Factory Training for a maximum of two District Technicians.

1.5 WARRANTY

A. The Contractor shall warrant the equipment and/or materials to be new and free from defects in material and workmanship, and will, within three (3) years from the date of final acceptance, repair or replace any equipment and/or materials found to be defective. This warranty shall not apply to any equipment or materials that have been subject to misuse, abuse, negligence or modification by owner or contractors other than the original installer that provided this warranty.

PART 2 - PRODUCTS

2.1 SYSTEM REQUIREMENTS

A. Basic Performance and Capabilities
1. System shall be fully programmable and configurable on site to accommodate system expansions and facilitate changes in operation.
2. All software programs shall be stored in non-volatile programmable memory within the FACP.
a. Loss of primary and secondary power shall not erase the instructions stored in the memory.
b. System programming shall be password protected.
3. Alarm, supervisory, and trouble signals from analog addressable devices shall be encoded onto NFPA Class B signaling line circuits (SLC).
4. Initiation device circuits (IDC) shall be wired NFPA Class B.
5. Notification appliance circuits shall be wired NFPA Class B.
6. System shall be capable of supporting 24V floor mount door holders.
7. System shall be capable of supporting 24V signal from water flow bell.
8. A single ground or open on any system SLC, IDC or NAC shall not cause a system malfunction, loss of operating power, or the ability to report an alarm.
9. Alarm signals arriving at the main FACP shall not be lost due to a power failure.
10. The system shall be provided with sufficient battery capacity to operate the entire system upon loss of 120 VAC power in a normal supervisory mode for a period of twenty-four (24) hours with five (5) minutes of alarm indication at the end of this period.
a. Systems that include voice evacuation shall provide sufficient battery capacity for twenty-four (24) hours with fifteen (15) minutes of alarm in lieu of the five (5) noted above.
11. The system shall automatically transfer to the standby batteries upon power failure. All battery charging and recharging operations shall be automatic. Batteries, once discharged, shall recharge at a rate to provide a minimum of 70% capacity in twelve (12) hours.

B. System Functional Operation
   1. The actuation of any approved alarm initiating device shall automatically initiate the following functions:
      a. Alarm LED on the FACP shall flash.
      b. Local audible piezo electronic signal in the FACP shall sound.
      c. The alarm condition description, including the type of point and the location within the protected premises, shall be displayed on the LCD display at the FACP and any remote annunciator(s).
      d. System shall transmit the condition to a UL Listed Central Station Monitoring Facility. History storage equipment shall log the information associated with the condition, including the time and date of the alarm occurrence.
   2. The actuation of any approved supervisory alarm initiating device shall automatically initiate the following functions:
      a. Supervisory LED on the FACP shall flash.
      b. Local audible piezo electronic signal in the FACP shall sound.
      c. The supervisory condition description, including the type of point and the location within the protected premises, shall be displayed on the LCD display at the FACP and any remote annunciator(s).
      d. History storage equipment shall log the information associated with the condition, including the time and date of the alarm occurrence.
      e. System output programs configured via control-by-event (CBE) programming to be activated by the particular point in alarm shall be executed, and the associated system output (alarm notification appliances and relays) shall be activated on either local outputs or points located on other network nodes.
   3. Whenever a trouble condition is detected and reported the FACP shall automatically initiate the following functions:
      a. Trouble LED on the FACP shall flash.
      b. Local audible piezo electronic signal in the FACP shall sound.
      c. The trouble condition description, including the type of point and the location within the protected premises, shall be displayed on the LCD display at the FACP and any remote annunciator(s).
      d. System shall transmit the condition to a UL Listed Central Station Monitoring Facility.
      e. History storage equipment shall log the information associated with the condition, including the time and date of the alarm occurrence.
      f. System output programs configured via control-by-event (CBE) programming to be activated by the particular point in alarm shall be executed, and the associated system outputs (alarm notification appliances and relays) shall be activated on either local outputs or points located on other network nodes.

C. Test Functions
   1. A “Lamp Test” or “Indicator Test mode shall be a standard feature of the FACP and shall test all LED’s and the LCD display on the main FACP and remote annunciators.
   2. A “Walk Test” mode shall be a standard feature of the FACP.
      a. The Walk Test feature shall function so that each alarm input tested shall operate the associated notification appliance for two seconds. The FACP will then automatically reset and confirm normal device operation.
      b. The event memory shall contain the information on the point tested, the zone tripped, the zone restore, and the individual point’s return to normal.
   3. A “Fire Drill mode shall allow the manual testing of the Fire Alarm System notification circuits. The Fire Drill shall be capable of being initiated at the main annunciator, remote annunciators, and via a remote contact input.
   4. “Bypass Mode” shall allow for any point or NAC circuit to be bypassed without affecting the operation of the total Fire Alarm System.

D. Remote Monitoring Connection
   1. The fire alarm system shall be connected via Digital Alarm Communicator Transmitter (DACT).
      a. The fire alarm control panel shall provide an integral Digital Alarm Communicator Transmitter (DACT) for signaling to a UL Listed Central Station Monitoring Company.
   2. The fire alarm system shall transmit alarm, supervisory alarm, and trouble signals with the alarms having priority over the trouble signal.

E. System Components
   1. A listing of individual Silent Knight Farenhyt System Components will be provided upon request.

F. Horns and strobes shall be White Ceiling mounted devices where viable.

G. Smoke detectors shall be installed along and on path of egress. Per current enforceable code for corridor coverage. All smoke detectors shall have labels put on bases. All labels should be black on white 3/4inx 11.5ft on the program should be large. If any questions on labeling reach out to Portland State to be answered.

PART 3 - EXECUTION

3.1 DIVISION OF WORK

A. Equipment specific boxes provided by the system manufacturer shall be labeled for fire alarm by System Supplier/Installer

B. Elevator Recall
1. All relays for elevator recall will be in an accessible location. They shall not be mounted on the ceiling.
2. All recall programming shall be tested and documented.
3. Contractor is responsible for complete installation and final approved inspection per the elevator inspector.

3.2 INSTALLATION

A. All work shall be completed in strict accordance with all applicable codes and ordinances, by a Silent Knight Select Farenhyt Engineered Systems Distributor.
1. Final installation heights of all wall mounted annunciator (Surfaced or Recessed) to be 60 inches to center line.
2. All cable/wire for the system specified herein shall be new, unless otherwise noted on plans.
3. System cable/wire and equipment installation shall be in accordance with good engineering practices as established by the National Electrical Code. Wiring shall meet all applicable codes. All cable/wire shall test free from all grounds and shorts.
   a. All cable/wire shall be continuous between terminals with no splices.
4. All cable/wire shall be labeled at all points of termination. All labeling shall be based on the room numbers as provided by the District/Owner or his representative.
5. Underground cables
   a. The cable/wire shall be intact with no cuts in the protective outer jacket.
6. vi. PSU leased retail spaces
   a. Each retail space should have a dedicated NAC circuit.
7. Floor mount door holder 24 volts speced with 1 ½" concrete anchors.

3.3 SYSTEM START-UP

A. All start-up programming and system commissioning shall be performed by a manufacturer's trained and certified technician currently employed by the System Supplier/Installer.

3.4 SYSTEM VERIFICATION

A. Subsequent to system start-up the system installer shall perform a 100% system pre-test to verify that the following features are functioning properly.
1. All notification appliances
2. All initiation devices
3. All control modules
4. All monitor modules
5. Communication link to monitoring service

3.5 ACCEPTANCE TESTING

A. The system installer shall, in the presence of the Inspector, perform 100% testing as noted in System Verification above.

END OF SECTION 284600

SECTION 32 10 00 - TREE CARE PLAN

PART 1 - GENERAL

1.1 PURPOSE

A. Portland State University (PSU) resides in a densely populated urban setting in downtown Portland, Oregon. With green space in short supply, maintaining a healthy and abundant tree canopy is essential for preserving wildlife habitat, providing shade for buildings and pedestrians, and creating restorative spaces and a sense of place for students, staff, and faculty. Trees contribute to campus identity while playing an important role in both meeting our carbon reduction goals and preparing our campus for the inevitable impacts of climate change. Trees offset carbon emissions through sequestration and are a fundamental strategy for reducing urban heat island effects that will only increase in the coming years. To that end, PSU seeks to create guidance for protecting our urban tree canopy with this Campus Tree Care Plan.

B. Our urban forest consists of a diverse set of species, both native and ornamental, in landscaped areas as well as along city streets. Campus trees vary greatly in age, size and function. The purpose of the Campus Tree Care Plan is to establish a strategy for long-term management of campus trees. The following objectives aim to ensure a safe, attractive and sustainable urban forest by protecting a canopy of trees to be enjoyed by our campus community

1.2 AUTHORITY / RESPONSIBLE DEPARTMENT

A. The FPM Landscape Assistant Director and Grounds Maintenance personnel within the Facilities & Property Management (FPM) department are responsible for the care of campus trees and enforcing the Tree Care Plan.

B. Grounds Maintenance will work with Capital Projects & Construction during large capital projects and renovations.

C. When required, permits will be obtained from Portland Parks & Recreation (PPR). PSU partners with PPR to maintain the park blocks, though PPR is ultimately responsible for all trees on the park blocks as well as all street trees.

D. The Tree Care Advisory Team will advise on yearly plans, events, and specific projects.

PART 2 - PRODUCTS - Not Used

PART 3 - EXECUTION

3.1 CAMPUS TREE CARE POLICIES

A. Planting
   1. Planting may be performed by landscape contractors, facilities personnel, and student, staff, or faculty volunteers.

B. Tree Selection
   1. Selection of planting locations as well as tree (and arborescent shrub) species should align with the City of Portland Plant List (appendix A) and Tree Location Requirements (appendix B).
   2. Plants listed as nuisance species in the Portland Plant Lists are prohibited.
   3. Native trees (Section 3 of Plant List) will be prioritized where appropriate and possible based on site factors.
   4. Desirable street tree species are listed in the Portland Parks & Recreation Approved Street Trees (Appendix C).

5. The City of Portland list of trees changes from time to time and should be verified for most current list.

C. PSU Prohibited Trees
1. Norway Maples (Acer platanoides) *, Silver Birch (Betula pendula), Poplars, Female Ginkgos, Pin Oaks (Quercus palustris), Black Locusts (Robinia pseudoacacia).
2. The City of Portland list of prohibited trees may vary and should be reviewed for current list. PSU will follow the City's list of prohibited trees on campus. [Link to City page: https://www.portland.gov/trees/tree-planting/native-and-nuisance-trees/nuisance-tree-list-1

D. Site Considerations
1. Choosing a tree species that is appropriate for the selected site is critical to ensuring the long-term health of the tree. Alternatively, if the campus is charged with planting a specific type of tree, an appropriate site should be identified. With every planting, the following should be considered: height of tree, canopy size, form (co-lumnar, round, etc.), habitat requirements (sun, soil, moisture), and impacts of leaf and fruit drop.
2. Edible landscaping is encouraged where appropriate. Preferably, fruit and nut bearing trees will be planted in areas large enough to accommodate fruit drop and prevent hazards and maintenance concerns on sidewalks. Prohibited locations include close proximity to buildings if the tree is large, and the middle of paved play areas or interior courtyards. Trees producing large leaves are discouraged from being placed in campus parking lots.

E. Planting Protocols
1. ANSI (American National Standards Institute) A300 Standard Practices are to be used for planting. When planting trees in locations managed by PPR, the city's standards must be used. General planting guidelines for campus trees include:
   a. Trees positioned with top of root flare planted at same level of soil, and compost or mulch must be four inches back from the trunk
   b. Planting hole to be 1.5 to 2 times the size of the root ball and 3 times the size of the root ball where practicable, 3' mulch
   c. Consider structural soil for street, parking lot and under permeable surfaces
   d. 1.5"-2.5" caliper, bulled and burlaped preferred
   e. Stake trees for security and protection or as needed to support tree during establishment
   f. Tree planting will generally occur October through December, and March through May
   g. When possible, soil volume to be based on the mature size of the canopy (700-1200 ft/per planting)
   h. Pruning is not done at planting except to remove broken or dead branches
   Pruning of Elm trees: Follow City regulations for Elm tree pruning moratorium between April 15 to October 15.

F. Protection and Preservation
1. Tree Protection During Construction
   a. During construction, it is important to protect the tree crown, branches, and trunk as well as preserve the roots and prevent soil compaction and disturbance.

G. Root Protection Zone
1. When possible, establish a root protection zone and isolate this zone from construction activities. Measure the DBH of the tree and for every inch of diameter measure a foot away from the base of the tree. The root protection zone is a circle of this radius around the tree. Surround the protection zone with chain link construction fencing, a minimum of 6 feet high secured with 8-foot metal posts before construction activities begin including clearing and grading. Install signage designating the root protection zone and keep the fence in place until final inspection. Construction activities may encroach on no more than 25% of the root protection zone area. The encroachment may not be closer than one half of the root protection zone radius.

H. Prohibited Activities Within the Root Protection Zone
1. Ground disturbance
2. Activity involving vehicle equipment access (unless the access is on an existing street or driveway)
3. Storage of equipment or materials (including soil)
4. Temporary or permanent stockpiling
5. Proposed buildings
6. Impervious surfaces
7. Underground utilities

8. Excavation or fill
9. Trenching
10. Other work activities

I. Root Cutting
1. Cutting a large percentage of tree roots can be dangerous as most large roots are structural roots. If large roots are injured or removed, the tree may fall, decline, or die. If root cutting is unavoidable, a certified arborist must approve and oversee the process. Roots over 4 inches in diameter should not be cut. Sharp tools should be used to make clean cuts to ensure healthy wound repair and prevent decay.

J. Alternative Method/ Exception
1. The alternative protection zone area must be prepared by an arborist who has examined the tree's size, location, and extent of root cover, evaluated the tree's tolerance based on species and health, and identified existing vulnerabilities within the root zone
2. The arborist must prepare an alternate protection plan including a description of how the plan provides an adequate level of protection. The plan should be signed by the arborist and include their contact information
3. After the arborist prepares the protection plan, surround the root protection zone with fencing and post signage including contact information for the arborist
4. If possible, the arborist should be on site during construction, and a signed contract should be in place for those services. The contract should include a final report from the arborist documenting all inspections and verifying the viability of the trees after the construction phase
5. Alternative construction techniques may be required in response to the revised protection method. In this case, an explanation of the techniques used should be included in the protection plan

For more information on tree protection during construction, see Appendix F, Tree Protection on Construction and Development Sites produced by Oregon State Universities' Extension Office

K. Tree Removal & Replacement
1. Live trees are removed only when required to protect the public safety or in some cases, as dictated by campus development and construction. In the case of new construction, depending on the age, species, and health of the tree, relocation of the tree will be favored over removal.
2. Trees may only be removed after consultation with the FPM Landscape Assistant Director where the committee reaches a majority consensus.
3. When a tree is removed, a new tree of equal function (canopy size, etc.) will be planted elsewhere on campus as determined by the FPM Landscape Assistant Director.

L. Catastrophic Event Response and Recovery
1. In the case of a catastrophic event, tree debris blocking campus pathways, posing hazards to the campus community or generally disrupting campus operations will be removed immediately. Those trees that are damaged beyond repair (as determined by the Grounds Maintenance Manager) will also be removed. In a case such as this, approval from the FPM Landscape Assistant Director is not required, but the team will be notified of removal decisions. Remaining trees will be pruned as needed to maintain health and ensure public safety. Lost trees will be replaced to restore the campus canopy within a reasonable time frame. In the case of trees managed by PP&R, they will need to be involved in response decisions

M. Tree Damage Assessment
1. Grounds Department Personnel will assess damage to trees on campus and may in some cases hire a certified arborist for further assessment. Damage to trees resulting from vandalism will be reported to the Campus Public Safety Office who will pursue responsible parties and enforce penalties

END OF SECTION 321000

SECTION 32 14 43 - POROUS UNIT PAVING

PART 1 - GENERAL

1.1 SUMMARY

A. Large areas of exterior concrete flatwork for roads and sidewalks increase surface runoff of rainwater into the City of Portland's storm water drainage system and prevent natural percolation into the subsurface. Designs of large areas of flatwork should include collecting or routing of this runoff into flowerbeds, bioswales, and other planted areas

B. Related Sections
1. Div. 32 Irrigation
2. Div. 32 Planting

1.2 DESIGN AND PERFORMANCE REQUIREMENTS

A. Permeable Pavers, Bioswales, and Rainwater Runoff Protection
1. The use of recycled aggregate at the highest percent possible is encouraged where appropriate and structurally allowed. Exposed aggregate sidewalks are discouraged except to match existing, e.g. the Park Blocks and Montgomery Greenway.
2. When selecting pavers, provide products that have adequate drainage systems.
3. Where applicable, the use of permeable pavers is encouraged.
4. At recessed bioswale installations, provide edge indicator warning for visually impaired individuals. Swales should be designed with an edge or curb to prevent fall hazards.

PART 2 - PRODUCTS - Not Used

PART 3 - EXECUTION - Not Used

END OF SECTION 321443

SECTION 32 17 00 - PARKING PAVING SPECIALTIES

PART 1 - GENERAL

1.1 SUMMARY

A. Parking Paving Design Guidelines
   1. All work should maintain parking area's general "Parksmart" certification
   2. Follow all City Requirements
   3. Adhere to PSU Climate Action Plan

B. Related Sections
   1. Div. 03 Concrete
   2. Div. 10 Signage
   3. Div. 11 Parking Control Equipment
   4. Appendix - Signage & Wayfinding Standards
   5. Appendix - PSU Climate Action Plan

1.2 REFERENCES

A. Green Business Certification, Inc., Parksmart Certification Standard, https://parksmart.gbci.org/certification

PART 2 - PRODUCTS

2.1 APPROVALS

A. Any deviation from specified products must first be approved by PSU Project Manager and PSU Transportation and Parking Services.

2.2 PARKING BUMPERS & TRAFFIC CALMING DEVICES

A. Curb Stops
   1. Manufacturer: Traffic Safety Supply Company
   2. Model: Recycled Rubber Parking Block.
   3. Product #: 3S-WS48 (Solid Wheel Stops) from Street Smart Solutions. Lag6 - screws and washer/shields

B. Speed Bumps
   1. Manufacturer: Traffic Safety Supply Company
   2. Model: 100% Recycled Plastic Speed Bump

C. Bollards and Posts
   1. Magnetic Posts
      a. 48" magnetic posts, black with white reflective stripping located at UCB Garage.
      b. Manufacturer: Parking Zone
      c. Model: "Gorilla Posts"
      d. Product #: GPMAGBOLLARD48BLKWV2
   2. Flexible Posts
      a. Black with white reflective striping located at Fourth Avenue Building Garage and Parking Structure 1
      b. Manufacturer: Street Smart Solutions
      c. Model: "Self-erecting Flexible Posts 3s-K71"
      d. Product #'s:
         1) 3S-K71-B-W, posts;
         2) 3S-K71-BTC, black top caps;
         3) 3S-K71-AB, anchor bolt sleeves.
   3. Safe-hit posts
      a. White with 2 white reflective bands (round).

b. Manufacturer: Traffic Safety Supply Co., Inc.
c. Product # 11613910

4. Breakaway wooden bollard, painted green.

2.3 SIGNAGE

A. “Standard Reserved Space” parking signs to be used based on PSU Signage Standards or sign shop standard templates.

B. “No Parking” signs to be per the standard signs used by PSU Transportation & Parking (TAPS)

2.4 TRAFFIC CONTROL MARKINGS

A. Paint Products
1. Striping
   a. White: Skipdash Type 1 Traffic Paint Fast Dry Waterborne Type White
   b. Blue: Skipdash Type 1 Traffic Paint Fast Dry Waterborne Type Blue
2. Traffic
   a. Product Type: SB Paint
      1) SB LF YEL WA HI VOC HY8Y2
      2) SB BLUE OR HI VOC
      3) SB BLK OR HI VOC
      4) SB PAINT FLUSH SOLUTION
      5) SB RED 100 VOC
      6) SB WHT 100 VOC
3. Walls
   a. Miller Paint - Premium - 38864
   b. Miller Paint - T/M Green Premium Satin Neutral Base - 44884
   c. Stairwells walls:
      1) Exposed concrete were possible, painted walls and corridors
      2) Miller Paint Composed CW048W
   d. Stairs and landings
      1) Epoxy finish, wraps up walls 6 inches, grey.
   e. Accents
      1) PSU Green 06M2612. Satin finish

B. ADA stalls
1. General: Confirm slope of parking stall and path of travel from car to building accessible entrance or public way meets required ADA slope standards.
2. Accessible Car parking spaces
   a. Provide minimum of 96” wide parking stall with minimum 60” hashed, painted access aisle on right side.
3. Accessible Van parking spaces
   a. Provide minimum of 96” wide parking stall with 96” hashed, painted access aisle on right side.
      1) Preferred configuration, where space is available.
4. Accessibility Symbol
   a. Provide 36” x 36” painted white square with blue interior containing International Symbol of Accessibility in white.
   b. Marked with “Van Accessible” text in 6” white lettering where applicable.
   c. Use above noted Skipdash paint Type White and Type Blue.

C. Loading Zones
1. Mark with “Loading Zone 30 Min” in 6” lettering using above noted Skipdash Paint Type White.

2.5 SURFACE COATINGS

A. Roof
1. ISO-Flex Deck Coating System. Color: Grey

B. Surface Lots
1. Prepare and compact rock base for asphalt.
   a. Pave light traffic locations with 3" of Commercial Level 2 asphalt mix.

b. Pave locations in heavy truck areas with 4" of Commercial Level 2 asphalt mix.

PART 3 - EXECUTION - Not Used

END OF SECTION 321700

SECTION 32 33 10 - SITE BICYCLE STORAGE

PART 1 - GENERAL

1.1 SUMMARY

A. Bike Parking should meet standards set out in PSU goals and PBOT Bike Parking Code Update (March 2020) https://www.portland.gov/sites/default/files/2021/bike-parking.adopted.final-final-final.pdf

B. Related Sections
1. Div 10 Signage
2. Div 28 Access Control
3. Appendix - PSU Climate Action Plan
4. Appendix - Signage & Wayfinding Standards

1.2 DESIGN AND PERFORMANCE REQUIREMENTS

A. Long-Term Bike Parking Facilities



1. Space allocated to secure bicycle parking in new or remodeled buildings shall be based on target bicycle mode share identified in the PSU Climate Action Plan, and exceed City requirements when possible.
2. Preferred design allows for people with bicycles to enter the facility separate from vehicle traffic if auto parking is present. Street side or at-grade entry is preferred.
3. Facilities will be located on site or within 300 feet of the site
4. Min. 42”-48” door for all entrances and exits. At least one door to have auto opener. Doors to be heavy duty steel with mesh screened sections for visibility when possible for security and ventilation.
5. For bike racks that are perpendicular to a building or curb, spacing between racks shall be 36" apart; spacing can be reduced if racks are installed at an angle.
6. Storage for bicycle locks shall be provided (simple bar/pipe mounted to wall allowing users to securely store their lock)
7. Provide parking for E-Bike charging with access to power.
8. Provide parking area for Cargo style bikes that require longer spaces and possible charging power.
9. Access control
   a. ID Card access control system is mandatory for all locations and must be compatible with Lenel system and meet PSU standards for access control. This includes door hardware, locking mechanism, access panel and all associated materials for connectivity.
   b. Security cameras will be installed to monitor and record all use of entrance door(s) at minimum. Additional security cameras to monitor interior of bike facility are optional, depending on design and layout of facility
   c. Orientation of racks will be determined to maximize space while maintaining access. Space design will be approved by TAPS before installation.
10. Signage
    a. Instructions for rack use will be posted when stacking racks are provided.
    b. Cargo bike spaces will be marked and signed for cargo bike use only.
    c. Other signage regarding use of enclose bike garage areas – including bike charging stations – to be determined by PSU Sign Shop & PM.

B. Short-Term Bike Parking Facilities
1. Short-term bicycle parking should be located within 50 feet of the building entry
2. Use of the building footprint should be prioritized over use of the furnishing zone in the public right of way
3. Tamper resistant hardware and/or secure access is required for facility
4. For racks that are perpendicular to a building or curb, spacing between racks shall be 36" apart; spacing can be reduced if racks are at an angle

PART 2 - PRODUCTS

2.1 LONG-TERM BIKE PARKING FACILITY
1. Bike Racks

a. Huntco Staple 1.5” Sch. 40 Round Steel Pipe with 3” x 6” Steel Flanges (horizontal parking)
b. Dero Decker (two-tiered, articulated parking system, horizontal)
c. Dero Ultra Space Saver (vertical rack system)
d. Cargo Bike Staple 1.5” Sch. 40 Round Steel Pipe with 3” x 6” Steel Flanges (customized short version of Huntco staple)

2.2 SHORT-TERM BIKE PARKING FACILITY

1. Bike Racks
   a. Huntco Staple 1.5” Sch. 40 Round Steel Pipe with 3” x 6” Steel Flanges
      1) Preferred model is Staple Corral w/3-4 racks per unit. If Corral is not possible individual Staple units shall be used
      2) Preferred color is PSU green but black is also permitted

PART 3 - EXECUTION

3.1 BICYCLE PARKING

A. Installation
   1. Provide reinforcing, backing and sleeves in surfaces to receive site items.
   2. Metal surfaces, corners, and edges should be deburred, rounded, or if no other means existed, protected with smooth edging.

END OF SECTION 323310

SECTION 32 84 00 - PLANTING IRRIGATION

PART 1 - GENERAL

1.1 SUMMARY

A. Related Sections
   1. Div. 32 Paving
   2. Div. 32 Plants

1.2 DESIGN AND PERFORMANCE REQUIREMENTS

A. The Contractor shall meet with the Project Manager and FPM Landscape Assistant Director to review/evaluate final irrigation system prior to final acceptance and installation.

B. As new plant selections shall be drought-tolerant and thus require minimal to no irrigation beyond first years of establishment, irrigation systems should be limited to what is operationally and cost-effective during maturing years. It is preferred that irrigation not be completely disconnected.

C. Provide a shutoff valve and backflow preventer, if needed, to isolate the irrigation system from the water supply main.

D. Provide sprinkler heads and nozzle types of the same manufacturer and pressure rating within the same irrigation zone. “Rainbird” irrigation systems are required to match existing systems.

E. Drip irrigation should be used in all planters and parking lot islands. Spray heads shall be used in turf.

F. Irrigation controls shall be readily accessible for maintenance and be provided with an ethernet connection

1.3 WARRANTY AND MAINTENANCE / MONITORING

A. Provide and maintain temporary irrigation of species for two years

PART 2 - PRODUCTS

2.1 MATERIALS

A. PVC Pressure Main Line Pipe
   1. Irrigation Pipe shall be PVC Schedule 40.

B. Controller
   1. All new and substantially modified irrigation systems are to be provided with a “Rain Bird” irrigation controller. Model: ESP-LXME2P or most current model.
   2. Controller shall be equipped with Ethernet connection capability, IQNCCEN Rain Bird IQ or approved equal.
   3. All power wiring and communication wiring shall be installed in separate conduits and per applicable building codes.

C. Control Wire
   1. All power wiring and communication wiring shall be installed in separate conduits and per applicable building codes.
   2. Wiring located under paving shall be located inside a separate PVC sleeve from irrigation water lines.
   3. Color code Type U.F. control wiring as follows:
      a. ground/common wire - white;
      b. lead-in signal wire - red;
      c. spare signal wire - orange;

d. moisture sensor wire - green;
e. master valve wire - yellow;
f. master valve dedicated common wire - white;
g. future expansion signal spares - black;
h. future expansion common - white.

D. Spray Heads
1. All new spray heads shall be Rain Bird 1800-SAM-PRS or approved equal

PART 3 - EXECUTION

3.1 INSTALLATION

A. Valves
1. Provide quick coupler valves (e.g. Buckner QB44RC-10) every 100 feet or less. These quick coupler valves are used to hand water landscaped areas.
2. Locate quick coupler valves to limit water hoses crossing walkways and roads

END OF SECTION 328400

SECTION 32 90 00 - PLANTING

PART 1 - GENERAL

1.1 SUMMARY

A. All plants are to be approved by PSU Landscape Staff.

B. Related Sections
1. Div. 32 - Planting Irrigation
2. Div. 32 - Paving Specialties
3. Div. 32 Campus Tree Care Plan

1.2 REFERENCES

1. Plantings must abide by the following standards:
   a. ANSI A300 Standards
   b. Trees planted in locations managed by Portland Parks and Recreation must abide by the city's Standards.
   c. Central City 2035 Plan, a Portland.gov Environmental Services guideline

1.3 DESIGN AND PERFORMANCE REQUIREMENTS

A. Plant Selection
1. Selection of plants shall require plant varieties that are drought-tolerant and require minimum to no irrigation beyond first years of establishment.
2. Prefer selection of native, non-cultivar species. Consider maintainable, adaptable, low-maintenance, and non-invasive species.

B. New gardens, eco-roofs or vegetated roofs shall be biologically diverse and contain multiple species of plants.

C. Eco-Roofs shall conform to new Portland Central City Plan District Guidelines covering storm water management on urban sites. Ref. Central City 2035 Plan.

D. When plantings are on a slope, select appropriate materials to avoid sloughing.

1.4 COORDINATION

A. All plants to be approved by Project Manager in coordination with FPM Landscape Assistant Director.

B. All landscape designs to be reviewed by FPM Landscape Assistant Director.

C. All trees to be planted by approved Landscaping Contractor or PSU in-house landscape staff, depending on scale of installation.

1.5 WARRANTY AND MAINTENANCE / MONITORING

A. Provide landscape maintenance of new installations for minimum of one year at new planting areas.

PART 2 - PRODUCTS

2.1 TREES

A. The use of native, not cultivar, species is encouraged.

B. The following species are forbidden in designs: poplars, female gingko, pin oaks, and locusts.
   1. Refer to City of Portland Parks and Recreations Urban Forestry Division's list of recommended species and the Campus Tree Care Plan.
   2. Unless included in contained and designated areas for food production and wild life habitat, trees that produce berries, fruits or nuts shall be prohibited.

C. Trees are prohibited in bioswales.

D. Tree planting to occur only during October through December, and March through May.

E. Pruning of newly planted trees, except limbs that are dead or broken, is prohibited.

2.2 TURF AND GRASSES

A. The use of drought-tolerant species is preferred

B. Areas to be grassed shall be seeded. Use of sod is discouraged. All grass seed used shall be 'certified'.

C. Hydro seeding is the preferred method of seeding large areas.

D. Select grass blend to accommodate formal or informal pedestrian traffic patterns.
   1. Sun locations: 3-way Perennial Ryegrass blend
   2. Shade locations: 30% Perennial Rye, 60% Creeping Red Fescue

E. Seeding to be done late summer or early fall.

F. Newly seeded areas shall be watered for a period of two to three weeks after application of seeds

2.3 PLANTING BEDS AND PLANTS

A. Preferred designs shall include raised planting beds with a mix of medium-sized bushes and/or shrubs, colorful perennials for interest and diversity, and grasses not requiring mowing (e.g. bunchgrasses).

B. Plants must be grouped in beds with plants of similar needs for sunshine/shade, water or fertilization, soil type, and PH.

C. Kinnikinnick ground cover is prohibited.

D. Decorative rock is not to be used in planting beds. Rocks used near or set within planting beds shall be either small (pea gravel size, 1/2" or less in diameter) or large (immovable boulders) set firmly into the ground. No decorative landscape rocks shall be of a throwable size, such as washed rock or similar landscaping rocks.

2.4 MULCH

A. All new landscaping mulch shall meet the campus standard.

B. Provide "Deco Nuggets" as topping material for consistency and fire resistance when dryer weather conditions exist.

PART 3 - EXECUTION

3.1 PLANTERS, EDGING & SAFETY

1. At planting areas that have a drop off at the edge, provide an edging plate or curb that indicates an edge to the walkway. This is in-line with ADA guideline requirements for edges at ramps and walkways for use by cane detectors and wheelchairs to keep from rolling off an edge. Consider installing a 4” tall metal plate on the inside face of the planting area similar to other areas on campus.
2. By code, drop-offs greater than 30-32” should have a guardrail installed at the edge in addition to a wheel stop or edge indicator

END OF SECTION 329000

Appendices

01.1 Environmental Health & Safety Laboratory Standards (In Progress)
01.2 Climate Action Plan
01.3 Office Standards
01.4 Classroom Standards
01.5 Furniture Standards
01.6 All-User Restroom Plan
01.7 Solid Waste Management Plan
10.1 Signage and Wayfinding Standard
10.2 Identity Standard
26.1 Energy Conservation Guidelines
27.1 Instructional Technology Guidelines

Portland State
UNIVERSITY

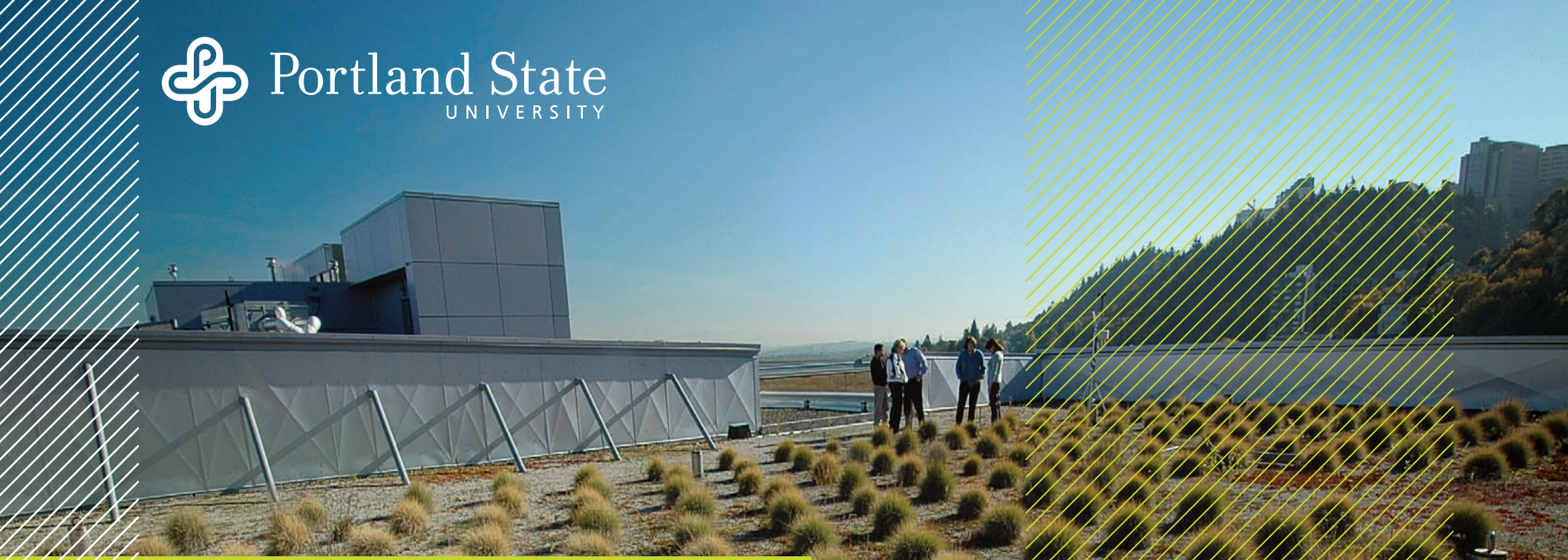

CLIMATE ACTION PLAN 2010



Please do not print this Plan!

A more printer friendly version is available at
http://www.pdx.edu/sustainability/climate-action-plan

This document is owned by the Portland State University (PSU) community; all pertinent information was compiled by the Campus Sustainability Office (CSO).

All suggestions and inquiries may be directed to GreenCampus@pdx.edu.

Acknowledgements

The PSU Climate Action Plan would not have been possible without the leadership and support of the following individuals and organizations: Wim Wiewel, Lindsay Desrochers, Roy Koch, Mark Gregory, the Oregon University System,the City of Portland Bureau of Planning and Sustainability, the Portland Metropolitan Regional Government (Metro), the Oregon Department of Environmental Quality, and TriMet.

Planning Team

The Climate Action Plan was compiled by Fletcher Beaudoin and Noelle Studer-Spevak. Overall support and assistance was provided by Dan Zalkow, Rani Boyle, and Emily Lieb.

Graphic Design Team

Graphics and layout were developed by Emily Ivers, with assistance from Fletcher Beaudoin, Emily Lieb, and Rani Boyle.

Key Contributors

Buildings: Alice Wiewel, Bob Simonton, Mark Gregory, Robyn Pierce, Nancy Grech, John Eckman, Don Forsythe, Quinn Soifer, Mark Fujii, Jahed Sukhun, Sharon Blanton, Anne Gire, McKinstry, Sasaki Associates, Inc.

Materials: Christel Eichner, Honore Depew, Joe Dahmen, Good Company

Travel: Susan Dodd, Lisa Whedon, Marissa de Leon

Commuting: Emily Lieb, Rani Boyle, Ian Stude, Dan Zalkow, Sarah Renkens

Research and Education: John Gordon, Shpresa Halimi, David Santen

EcoDistrict Development: Mark Gregory, Dan Zalkow



President's Message

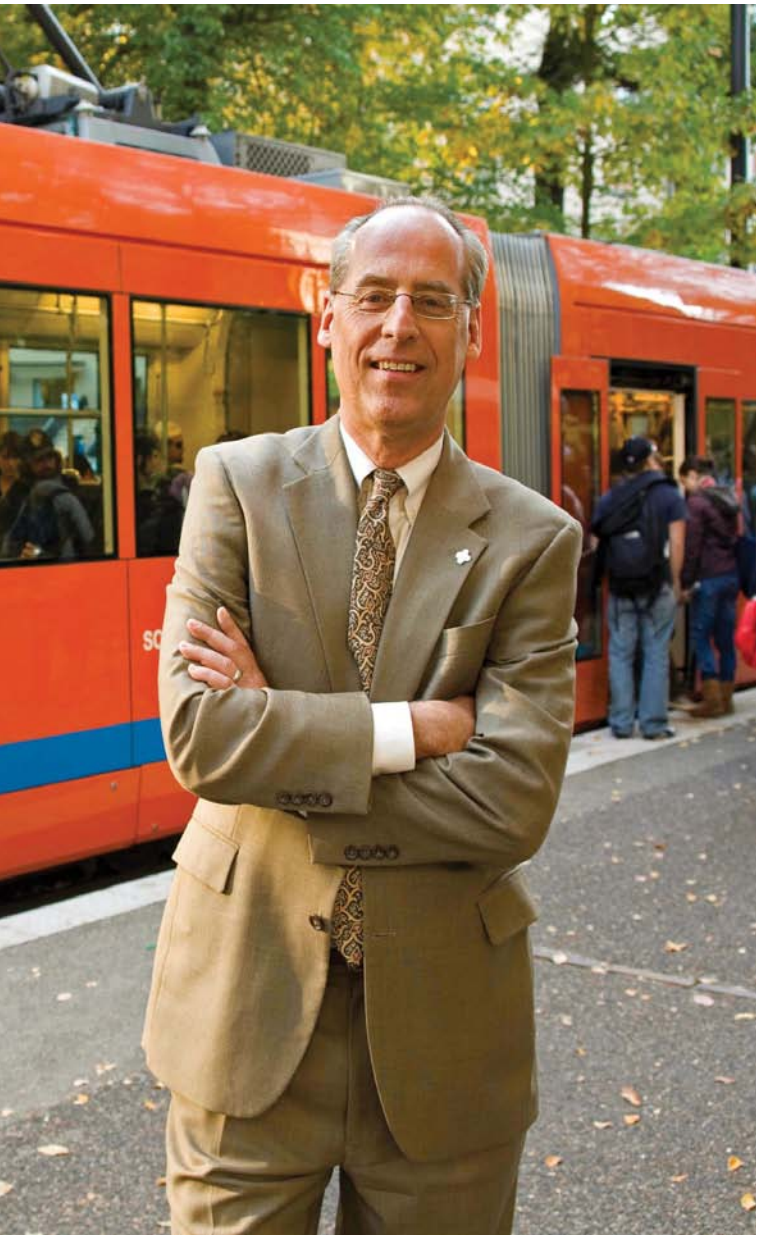

Portland State University joined the American College & University Presidents' Climate Commitment (ACUPCC) in 2007. That commitment, which now numbers 685 signatories, challenged universities to take a leadership role in curbing greenhouse gas emissions.

Through a campus-wide effort, we have established an inventory of our greenhouse gas emissions, and developed strategies for achieving "carbon neutrality" by 2040.

Portland State is an urban university with a growing enrollment that today approaches 30,000 students. We have plans for additional on-campus housing and facilities, an aggressive research agenda and increasingly global profile.

Yet by thinking bigger, we can reduce our environmental footprint.

As the ACUPCC states: "We believe colleges and universities must exercise leadership in their communities and throughout society by modeling ways to minimize global warming emissions, and by providing the knowledge and the educated graduates to achieve climate neutrality."

To accomplish this means finding ways of constructing greener buildings, as we have with the new Academic and Student Recreation Center, which earned LEED Gold certification from the U.S Green Building Council. It means establishing new standards of practice, as we will with the creation of a downtown ecodistrict anchored by the Oregon Sustainability Center, the world's first high-rise net-zero building.

It means reducing waste, finding greater efficiencies in energy usage, and creating smarter travel and commuting options. And it requires that we continue to do what we do best, bringing excellence in teaching and research to partnerships that span disciplines, industry, government, and citizenry.

In short, this climate commitment embodies Portland State University's core values of engagement, and of our motto, "Let Knowledge Serve the City."

This Climate Action Plan illuminates the enormous potential of a truly integrated approach: engaging students, faculty, staff, and our community in solving one of the pressing issues of our time, and in doing so, creating a more livable, sustainable future.

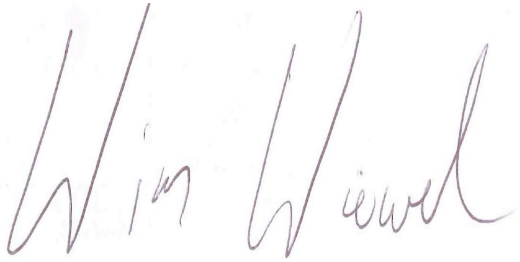

Wim Wiewel, President
Portland State University
Signed 24th of May, 2010

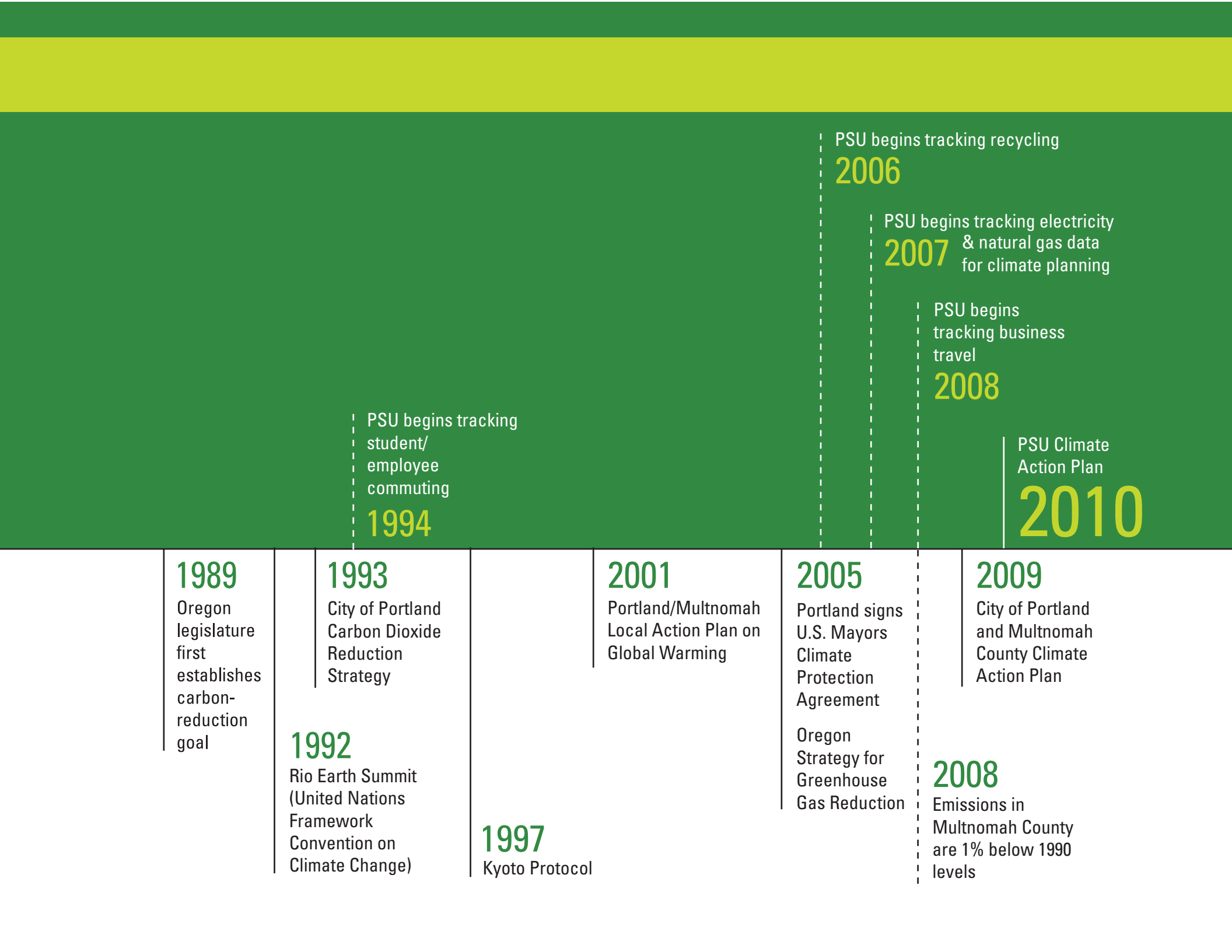
PSU begins tracking recycling
2006
PSU begins tracking electricity
2007
& natural gas data
for climate planning
PSU begins
tracking business
travel
2008
PSU begins tracking
student/
employee
commuting
1994
PSU Climate
Action Plan
2010
1989
Oregon legislature first establishes carbon-reduction goal
1992
Rio Earth Summit (United Nations Framework Convention on Climate Change)
1993
City of Portland Carbon Dioxide Reduction Strategy
1997
Kyoto Protocol
2001
Portland/Multnomah Local Action Plan on Global Warming
2005
Portland signs U.S. Mayors Climate Protection Agreement
Oregon Strategy for Greenhouse Gas Reduction
2008
Emissions in Multnomah County are 1% below 1990 levels
2009
City of Portland and Multnomah County Climate Action Plan

Contents

9 *Executive Summary*
13 Introduction
21 Data Analysis & Collection
25 Goals & Targets
27 Plan Implementation
29 2030 Targets & Actions
33 Buildings
41 Materials
47 Travel
51 Commuting
57 Research & Education
63 EcoDistrict Development
67 Conclusion
68 References
70 *Appendices*

PSU Goal:
80% below
2008 levels

2030

PSU Goal:
Carbon Neutral
Campus

2040

2030

Portland/Multnomah
Target: 40% below
1990 levels

2050

Portland/Multnomah goal:
80% below 1990 levels

State of Oregon goal: 75%
below 1990 levels


SE BELMONT ST

Executive Summary

Climate change is the biggest challenge 21st century college graduates will tackle in their lifetimes. The concentration of carbon dioxide in Earth's atmosphere is higher than at any time in the history of human existence. This has already begun to destabilize systems that support our civilization through fresh water, food, and health. Because the risks associated with business as usual are high, governments, institutions, corporations, and individuals are taking steps to dramatically reduce greenhouse gas (GHG) emissions.

In June 2007, Portland State University (PSU) joined this effort by signing the American College and University Presidents Climate Commitment (ACUPCC). The commitment challenged PSU to form a committee to oversee climate efforts, track carbon emissions, and develop a Climate Action Plan (CAP) to move toward carbon neutrality. This document fulfills the final requirement for ACUPCC and supports regional climate goals of partner agencies, such as those described in the 2009 City of Portland and Multnomah County Climate Action Plan.

In fiscal year 2008 PSU generated approximately 106,000 Metric Tons of Carbon Dioxide equivalent (MTeCO2). This equates to 3.85 metric tons for every student and employee, or the equivalent annual emissions from 20,000 passenger vehicles[1]. The largest portion of PSU's emissions was associated with goods and services purchased by the University. Utilities to operate buildings (heating, cooling, lighting, powering electronics, and appliances) were the next largest source of emissions.

PSU's goal is to neutralize carbon emissions by 2040. In order to achieve this goal, the CAP outlines long-range targets and near-term actions that align with the State goals found in OR HB 3543, the State mandates OR HB 3612 and EO98-07, and the City of Portland and Multnomah County Climate Action Plan. In order to track performance and ensure PSU is making incremental steps towards carbon neutrality, near-term (one to three-year) actions and 2030 Targets have been identified for each of six sectors: Buildings, Materials, Travel, Commuting, Research and Education, and EcoDistrict Development.

The University's general approach to emissions reduction is as follows:

1. Reduce emissions through resource conservation and efficiency improvements of campus systems. This will reduce University utility expenditures and decrease the flow of Oregon tax dollars to other regions where fossil fuels are extracted; additionally, retrofits will support local jobs.
2. Choose less-harmful goods, services, and energy sources. Savings from conservation efforts may be redirected toward purchasing healthier products and forms of energy. The premium for less carbon-intensive items will change when the market attaches a dollar value to carbon emissions.
3. When all other options have been exhausted, PSU will invest in the region through locally generated offset projects.



Cultivating non-traditional partnerships and harvesting local sources of intellectual capital will be important for achieving PSU's 2040 carbon neutrality goal. Wherever possible, University facilities and operations will be used as learning tools and research topics for students. Students are fascinated by research questions about the merits of hand dryers versus paper towels or, "How much energy is used by the student union?" In response to this interest the CAP has identified a series research opportunities for integrating the academic and operational sides of the University.

PSU will know if it is meeting CAP targets and goals by tracking data about natural resource flows in and out of the University. This is also a key to success of the budding EcoDistrict Initiative – an attempt to bring an entire neighborhood into alignment with local environmental goals. This initiative also represents partnerships between public, private, academic, and non-profits interests, and it can serve as a platform for overcoming traditional barriers and accelerating progress towards regional climate goals.

Financial capital will also be essential for meeting emissions targets. To date, PSU has successfully leveraged state funds and Energy Trust of Oregon dollars for major capital construction projects. In order to achieve the goals and targets in the CAP, PSU will investigate partnerships with the Climate Trust and leverage bonds and funds from the State Energy Loan Program. The University will also investigate internal financial strategies to incentivize conservation, design an energy fund to fuel small conservation projects, and consider innovative means to fund personnel in traditionally understaffed areas.

The actions in this plan will result in direct emissions reductions while also supporting PSU's educational mission and strengthening its role as an anchor institution in the heart of Portland. By integrating this Plan into the day-to-day operations and activities of the University, PSU will:

- Create a rich learning environment that supports the next generation of leaders, designers, engineers, and entrepreneurs who will help transition our region into a carbon-light economy.
- Ensure that students are equipped with basic ecological literacy to inform their civic engagement activities.
- Test existing sustainability practices and bring new technologies to the market through collaborative research.
- Identify and implement local projects to offset PSU's unavoidable carbon generation practices.
- Make strategic investments in energy conservation to keep campus utility bills in check so PSU can continue to offer affordable higher education opportunities in an environment of rising energy costs.
- Leverage PSU's bonding capacity and considerable buying power to finance meaningful projects with local partners that make our region more energy sufficient.
- Increase workforce training opportunities for under-represented groups in green jobs.

Guided by the Climate Action Plan, PSU will join leaders around the region in creating a vibrant carbon-light future. Engaging all aspects of the University in pursuit of carbon neutrality will foster a culture of innovation and educational inquiry, create a leaner and more adaptable organization, and guide and shape PSU as it strives to increase academic prominence in a rapidly changing world.


PORTLAND
STATE

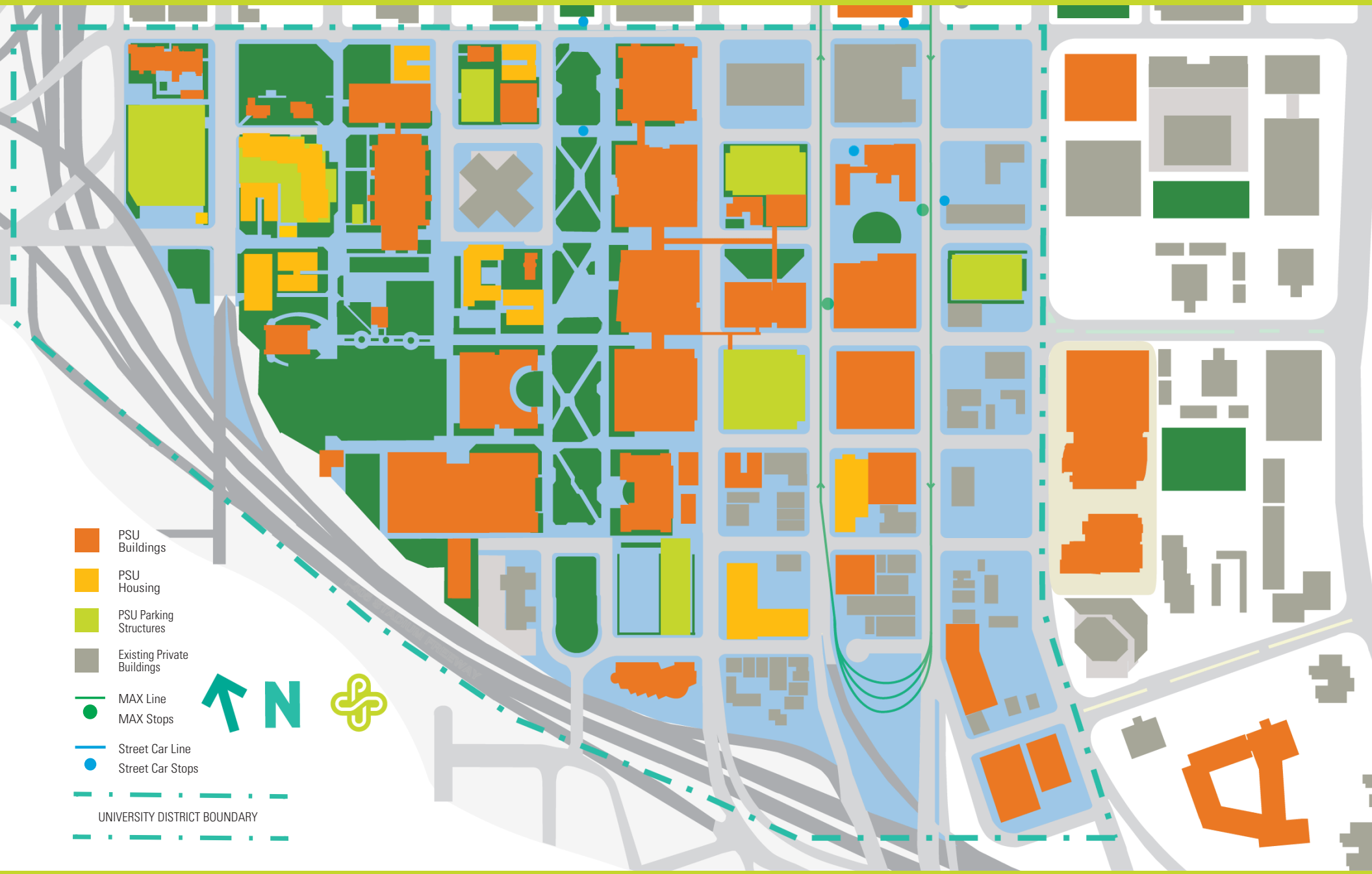
PSU Buildings
PSU Housing
PSU Parking Structures
Existing Private Buildings
MAX Line
MAX Stops
Street Car Line
Street Car Stops
UNIVERSITY DISTRICT BOUNDARY
N

In June 2007, Portland State University (PSU) joined the American College and University Presidents Climate Commitment (ACUPCC). The commitment challenged the University to begin tracking greenhouse gas emissions (GHG) and develop a climate action plan to reduce emissions. PSU's most complete emissions inventory was for fiscal year 2008 (July 2007-June 2008). Using this 2008 data as a baseline, this Climate Action Plan (CAP) aims to provide a framework for advancing PSU's climate stewardship over the next 30 years.

The CAP describes a path to transform PSU into a carbon neutral campus by 2040 through medium-term targets and short-term actions. It outlines PSU's institutional capacities and acknowledges current initiatives for which ongoing support is necessary for success. Additionally, the Plan outlines actions essential for building PSU's capacity to effectively prepare for, implement, and track progress of emissions reductions projects. These efforts include improving data collection systems, cultivation of faculty/student/staff resources, and gathering of monetary support. Lastly, the Plan outlines specific carbon reduction actions, such as installing high-efficiency boilers, initiating waste reduction campaigns, and developing on-site renewable energy technology.

At the start of the CAP planning process, the Campus Sustainability Office (CSO) took a leadership role in drafting the Plan, including gathering data, setting goals and targets, and identifying mitigation actions. Gradually, natural leaders emerged within each mitigation area and began to shape the content of their respective sections of the Plan with the support of the planning team. As the Plan transitions from development to implementation, CSO's role will be one of support, facilitation, and integration for the working groups who are leading the bulk of the action items. Although CSO's role will be increasingly behind-the-scenes, the office will continue to be a primary steward of capacity-building and data collection over the next three years.

To ensure that the Plan responds to changing conditions at PSU, in the region, and in the world, it will be a living document, reviewed and revised every three years. The focus of the first three years will be communicating, integrating, and supporting the good work already being done on campus, developing the capacity to effectively enact and track the results of emission reduction projects, and implementing a targeted set of new emissions reduction programs and projects. As internal capacity for implementing and tracking projects increases, the Plan will shift the bulk of its focus to building new, and expanding existing, emissions reduction projects and programs.

Central to the overall vision presented in this document is a deliberate effort to think systematically, test new strategies, and cultivate unconventional approaches to problem solving. This Plan outlines numerous projects that take a systematic approach to problem solving, such as researching the technological and behavioral efficiencies that could be achieved through collaboration with university neighbors, or developing new methods for better connecting the everyday work of faculty and students to university operations. These seedling projects will hopefully grow into an ongoing, campus-wide dialogue about creative solutions to climate problems. In addition to playing a leadership role in developing local solutions to global problems, PSU also aspires to integrate ideas and approaches from other institutions and organizations. Therefore, it is vital that PSU pursues collaborative projects with local, regional, and global partners.

Context

Federal, State, and local legislation, as well as best practices in climate planning, were used to guide and compel PSU's climate action planning process. This backdrop of policy and research provided a reference for setting emissions reduction targets and goals. The bulk of the planning work consisted of evaluating current conditions at PSU and adjusting the targets and actions to reflect the operating context and intellectual resources available to a state-funded urban research university. This section describes the context behind the Plan and establishes a basis for future evaluation, review and adjustment cycles.

Climate Change and Emissions

The Rio Summit in 1992 was a major step toward bringing climate change and the impact of greenhouse gas (GHG) emissions onto the global stage. Since that summit, there has been a steady increase in awareness and action around climate issues. Climate stewardship is becoming a competitive advantage for large corporations; governments (local, state and federal) are analyzing the risks and opportunities associated with climate mitigation; and an increasing number of universities are realizing the potential for education and workforce training in a carbon-constrained world.

Standards and Conventions

To better comprehend PSU's role in climate-altering fossil fuel consumption, it helps to understand the international framework used to describe greenhouse gas emissions. The World Resources Institute's Greenhouse Gas Reporting Protocol divides emissions into three categories[2]:

Scope 1 emissions are those GHGs that are directly released on-site, such as combustion of fuels and the application of fertilizers on campus.

Scope 2 emissions result from energy purchased from off-site sources where fuels are burned. PSU currently purchases electricity that is generated off-site.

Scope 3 emissions include all other GHG-producing activities associated with the activities of an institution, including: commuting; air travel for university activities; waste disposal; and embodied emissions from the extraction, production, and manufacturing of purchased goods.

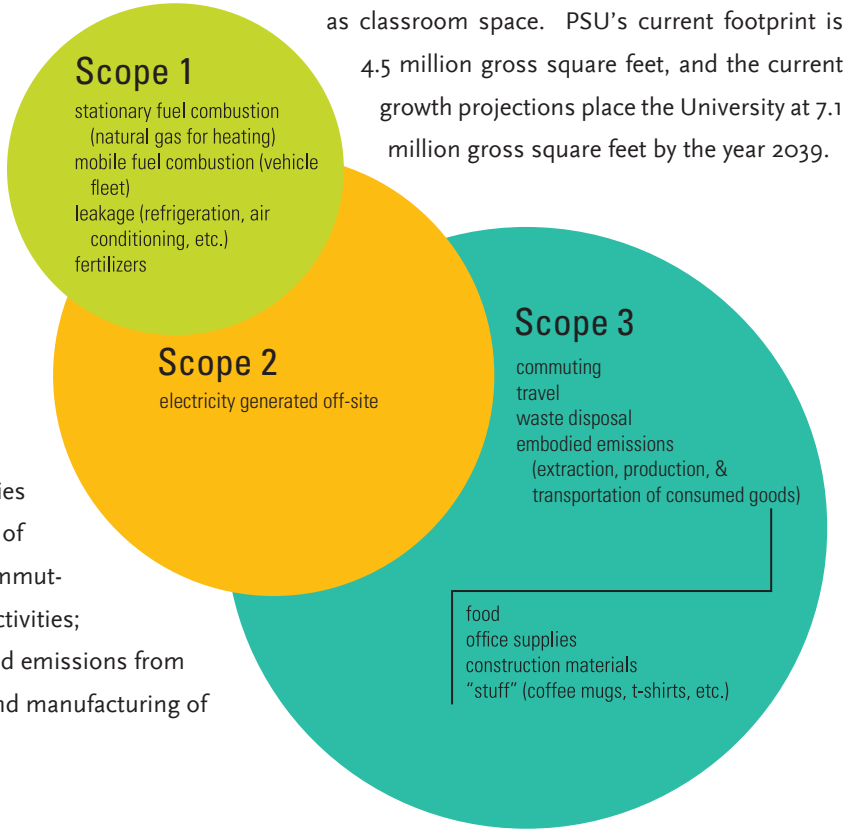

PSU is a center of opportunity for 28,000 undergraduate and graduate students. The University's 49-acre campus is located in the southern portion of downtown Portland, Oregon. The University is expected to have significant growth over the next 30 years. Conservative projections estimate adding 500 students per year, totaling 12,500 additional students by the year 2039. In order to accommodate this growth, PSU plans to increase on-site housing as well as classroom space. PSU's current footprint is 4.5 million gross square feet, and the current growth projections place the University at 7.1 million gross square feet by the year 2039.

Current Resources

The Campus Sustainability Office (CSO) is located within PSU Finance and Administration (FADM). The CSO currently has on full time manager, one part-time undergraduate assistant, an AmeriCorps members, and a temporary planner. CSO personnel frequently partner with staff in other units, such as Auxiliary Services, the Transportation Options program, PSU Recycles!, the Office of Sustainability Leadership and Outreach, Residence Life, Campus Recreation, student government and the Center for Sustainable Processes and Practices (on academic, research issues, and major events).

Within each emissions sector, PSU Climate Action Plan working groups were formed to develop action items that can be achieved based on the resources outlined within the Plan. As time goes on, CSO will help increase the capacity of these groups by: increasing the quality of data being used for tracking emissions, facilitating coordination and integration with research and curriculum projects, and securing additional funding for the action items in the plan.

Finally, PSU's motto, "Let Knowledge Serve the City," is a message that seeps into the operations, curriculum, and research of the University. Operations staff collaborate with city and regional government around sustainability efforts, such as increasing transit access to campus. PSU faculty conduct cutting-edge research on issues critical to the Pacific Northwest and beyond, including sustainable urban communities, climate change, ecosystem services, and renewable energy. PSU's academic structure does not confine sustainability to a single department or discipline. Faculty work across traditional boundaries to bring multiple perspectives to real-world problems, and students are exposed to a range of sustainability issues that extend beyond the boundaries of their field of study.

The scope of action identified in the plan is contingent upon resource allocation assumptions and may expand or contract throughout the three-year updating cycle. Additionally, CSO and the working groups will continue to search for new resources that can support and or help expand the work in the CAP.



Prior Efforts

Tracking GHG is a fairly new practice for the University, and record-keeping is evolving to keep pace with new demands. In fiscal year (FY) 2008, PSU invested in a single database to track utility bills seamlessly among three departments. Consequently, digital data quality for Scope 1 and 2 emissions is accurate for FY 2006-2009. FY 2008 marks the first year that University-sponsored travel was included in PSU's carbon inventory.

In 2009, the Oregon University System (OUS) Chancellor's Office funded a study by the McKinstry consulting firm to quantify emissions reduction potential and costs in key building performance areas. McKinstry performed an analysis of several buildings and extrapolated their findings to the rest of campus. Many of the actions outlined in the McKinstry study are already underway or completed. The CAP has used some of the remaining recommendations from the study to guide action items in the Buildings section. To view a full report of the McKinstry study findings and recommendations, please contact greencampus@pdx.edu.

The following represents a timeline of carbon emissions studies.

1994

PSU begins tracking commuting mode splits.

2003

First carbon inventory by a class of students with CSO.

2004

First carbon inventory for OUS system by Good Company(consulting firm)[3].

2006

PSU begins tracking recycling rates.

2008

Carbon capstone class completes inventory for FY07 emissions with CSO.

2009

Sightlines (consulting firm) produces a preliminary carbon estimate for FY 2008.

McKinstry (consulting firm) produces a report for PSU that identifies emissions reduction projects for campus buildings and estimates the costs associated with those projects.

Good Company (consulting firm) provides a lifecycle greenhouse gas analysis for PSU's purchased goods, food, and services in FY 2008.

Good Company (consulting firm) estimates a 1990 baseline for PSU emissions associated with energy consumption at 23,342 metric tons of CO_2 ($MTeCO_2$).

PSU begins tracking travel emissions.

2010

Using the Sightlines FY 2008 estimate as a base, CSO calculates a total emissions estimate that includes all categories of emissions.

Mandate

Climate Tracking and Planning

By signing the American College and University Presidents Climate Commitment (ACUPCC) in 2007, PSU agreed to begin tracking greenhouse gas emissions (GHG) and develop a plan to reduce emissions. The Association for the Advancement of Sustainability in Higher Education (AASHE) tracks the completion of tracking and planning efforts for universities that have signed the commitment. Universities are given a deadline (based on when they signed the commitment) for completing their climate action plan. Universities that have not completed the plan by the deadline are shown as delinquent in AASHE's yearly report.

State Legislation

PSU is also acting within the context of two laws passed by the Oregon legislature in 2007 and 2008:

HB 3543: Sets statewide goals to stabilize emissions in 2010, reduce emissions 10% below 1990 levels by 2020, and reduce emissions 75% below 1990 levels by 2050[4].

HB 3612: Oregon State agencies are directed to reduce energy consumption 20% below 2000 levels by 2015.

PSU's progress toward these statewide goals is highlighted in the "Emission Profile" section of the introduction.

Other Relevant Efforts

The Portland Metro area is a hub of interest for climate planning and sustainability initiatives. To prevent redundant work, the CAP attempts to align with and be aware of numerous activities. The plans and initiatives referenced in this document include PSU's Framework Plan, the Multnomah County and City of Portland's Climate Action Plan, the Portland Bike Master Plan for 2030, the EcoDistrict Initiative, the Multnomah County Food Initiative, Metro's Regional Inventory[5] and the national Climate Prosperity Project. These activities are referenced to varying degrees within the Plan; in many cases, further coordination with these interests is necessary. Due to time and resource constraints, some regional climate activities were not included in this version of the plan.

The EcoDistrict Initiative, a regional effort led by the Portland Sustainability Institute, is referenced throughout the Plan and highlighted in the EcoDistrict section. This initiative is focused on developing and implementing five pilot "EcoDistricts" throughout the Portland area, including one in the University District. An EcoDistrict, as defined by Portland Sustainability Institute, is: "A neighborhood or district with a broad commitment to accelerate neighborhood-scale sustainability. EcoDistrict members commit to achieving ambitious natural resource performance goals, guiding district investments and community action, and tracking progress over time."[6]




Welcome!
Tomatoes • Basil
Student Grown
$2.00 - 4" pot

Plan Development

Widespread participation and ownership in the planning process is vital for creating a Plan that people believe in and support. On January 15th, 2010, PSU submitted a discussion draft of the Climate Action Plan (CAP) to the Association for the Advancement of Sustainability in Higher Education (AASHE). The initial draft was written by the planning team and approved by administrators. On January 16th, the Campus Sustainability Office (CSO) began an intensive effort to communicate and solicit feedback on the discussion draft of the Plan.

This version of the Plan reflects input from a variety of faculty, staff, students, partner institutions, and community members. CSO engaged with an undergraduate class taught by Dr. Barry Messer called "Urban Planning: Environmental Issues" for the entire winter term (2010) to solicit input and conduct research on CAP goals and action items. During the winter term, CSO also made presentations to over 15 other classes (which equates to over 500 students) and held a campus town hall meeting (40 attendees) to present the draft Plan, answer questions, and solicit feedback. Additionally, the planning team has done targeted outreach to professors and staff and administered a campus survey to solicit responses to the goals, targets and actions presented in the initial draft of the CAP.

Finally, CSO coordinated with several PSU administrative offices to ensure interdepartmental agreement around the targets and actions outlined in the Plan. These offices include: Auxiliary Services, Facilities and Planning, Business Affairs Travel Office, Finance and Administration, and Academic Affairs. In addition, the Portland Bureau of Planning and Sustainability, Portland Metropolitan Regional Government (Metro), the Oregon Department of Environmental Quality and TriMet all provided input on discussion drafts of the Plan.



PSU emitted approximately **106,000 metric tons of CO_2** in financial year 2008

PSU's greenhouse gas (GHG) inventory for fiscal year (FY) 2008 provided a starting point for developing goals and setting targets. The FY 2008 inventory used previous data gathering by consultants and expanded on this data by working with administrative offices and local utilities companies to expand the scope of emissions included in the inventory. The final FY 2008 GHG estimate produced by the Campus Sustainability Office represents the planning team's best effort to gather accurate and detailed data about university emissions. Data sources for each of the sections in the plan are described below.

Buildings

- University electricity usage for 2000 and 2008 was estimated through utility bills in the archives of PSU Facilities and Planning (FAP), data from Portland General Electric, and the University's billing system.
- University gas usage numbers for 2000 and 2008 were estimated through utility bills in the archives of PSU FAP, data from Northwest Natural Gas, and the University's billing system.

Materials

Emissions associated with waste disposal were estimated using data from PSU's waste hauler, TrashCo, for total landfill tonnage produced by PSU. The Materials section also includes embodied, or "life cycle," emissions from the University's purchased goods, foods and services in FY 2008. These calculations were performed by the Good Company consulting firm in 2009.

Travel section

The Business Affairs Office produced data for PSU travel by going through old bills and tracking miles traveled and mode. These data were used to calculate carbon estimates based on the emissions associated with each travel mode.

Commuting section

The Transportation and Parking Services office (TAPS) conducts commuting mode split surveys for students and staff on a biennial basis. These survey data were used to calculate carbon estimates based on the emissions associated with each commute mode.

Limitations

Throughout the planning process, a variety of limitations and barriers related to availability and scope of emissions data were identified. Some of these limitations were addressed through the planning process, but others will require on-going efforts. These on-going efforts are discussed in the body of the Plan.

Data

Like many other institutions, PSU has only recently begun to gather data to track greenhouse gas (GHG) emissions. This lack of complete historic data contributes to a wide margin of error in estimates of 1990 and 2000 benchmarks. Oregon climate legislation is based on emissions levels from these years; however, 2008 was the first year PSU completed a comprehensive GHG inventory. Partial utility data sets are available, but it has been difficult to retrieve and compile complete datasets for past energy usage. In addition, data related to University-sponsored travel are difficult to access; multiple agencies outside of PSU must be contacted to gather information on chartered busses, van rentals, and car-sharing miles.

The data for the Buildings, Travel and Commuting sections only include the direct combustion emissions, and not the full fuel life-cycle emissions. The Materials section provides an estimate for the full fuel life-cycle emissions, which includes raw material extraction, production, transportation of goods and services consumed by PSU in FY 2008; however, this number is still an extremely rough value for the full fuel life-cycle emissions from Materials consumption.

The actions and timelines contained in this Plan are based on the data and resources available to the planning team. As new resources, such as life cycle analysis tools, become more available, the goals and actions in the CAP will be refined to reflect improved knowledge about emissions. There are several opportunities for improvement in data collection[7], and these are documented throughout the plan. As CSO develops its analytical capacity, the University will be in a position to move toward continuous improvement in climate stewardship.

Scope

Many Scope 3 emissions, which consist of indirect GHG emissions, are not easy to track accurately, although methods do exist for estimating their rough magnitude so they can be included in an institution's total inventory. While relatively accurate data for commuting and travel emissions and emissions from waste disposal were included in the Plan's estimates, embodied emissions associated with extracting, manufacturing, and transporting goods to campus are more difficult to track. Tracking embodied emissions is challenging due to: (1) the relative newness of methods of life cycle analysis and (2) PSU's decentralized purchasing structure. Considerable institutional changes need to occur before the University can effectively track and understand and the scope of impact related to its material consumption.

In addition, PSU's GHG inventory does not include Scope 1 emissions from heating and cooling leased spaces; Scope 1 emissions are limited to PSU-owned buildings.

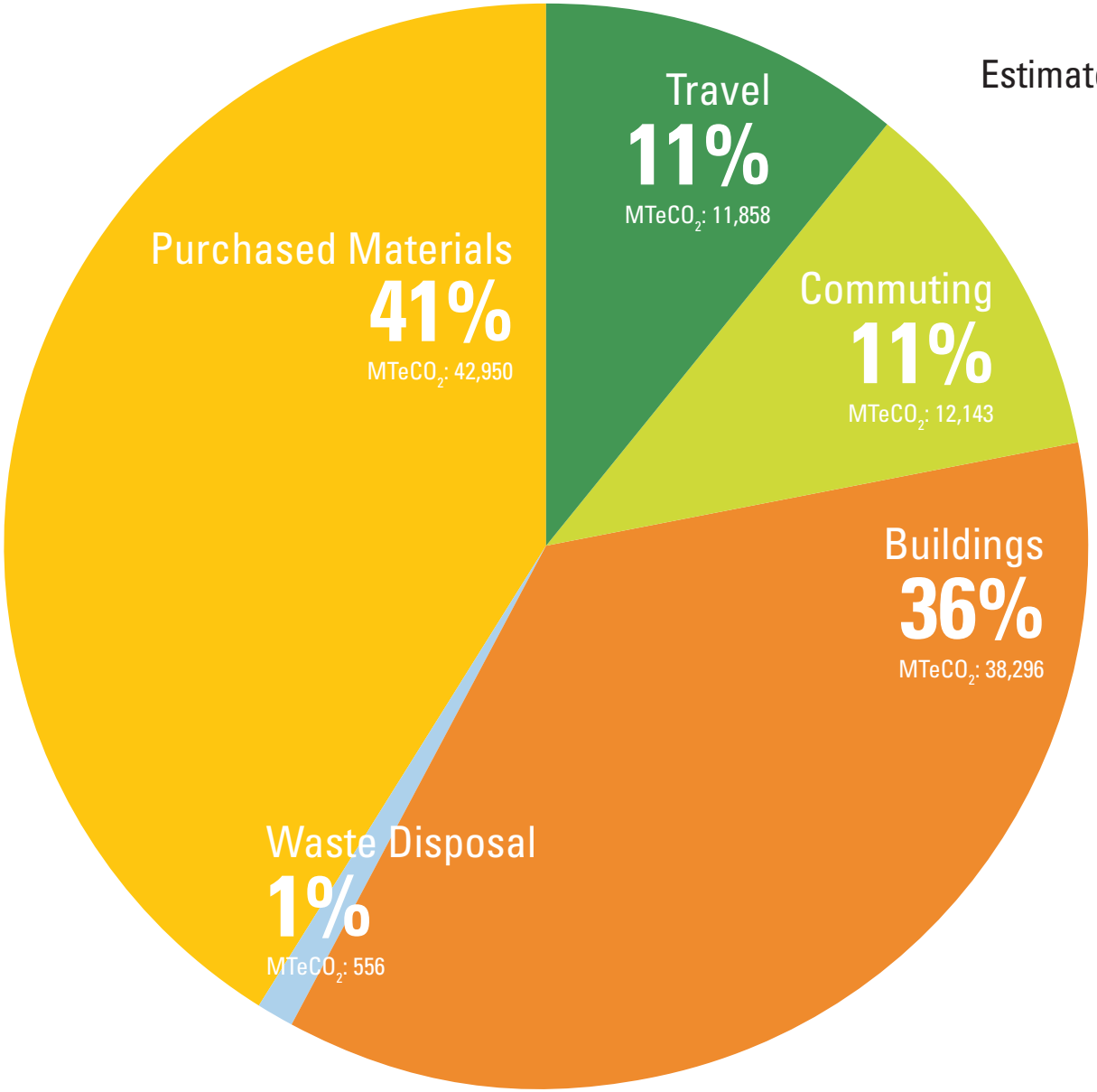

Portland State University
Estimated Greenhouse Gas Emissions
Fiscal Year 2008

Total $MTeCO_2$:

105,803

Emissions Reduction Goal & "Business as Usual" Emissions Projection

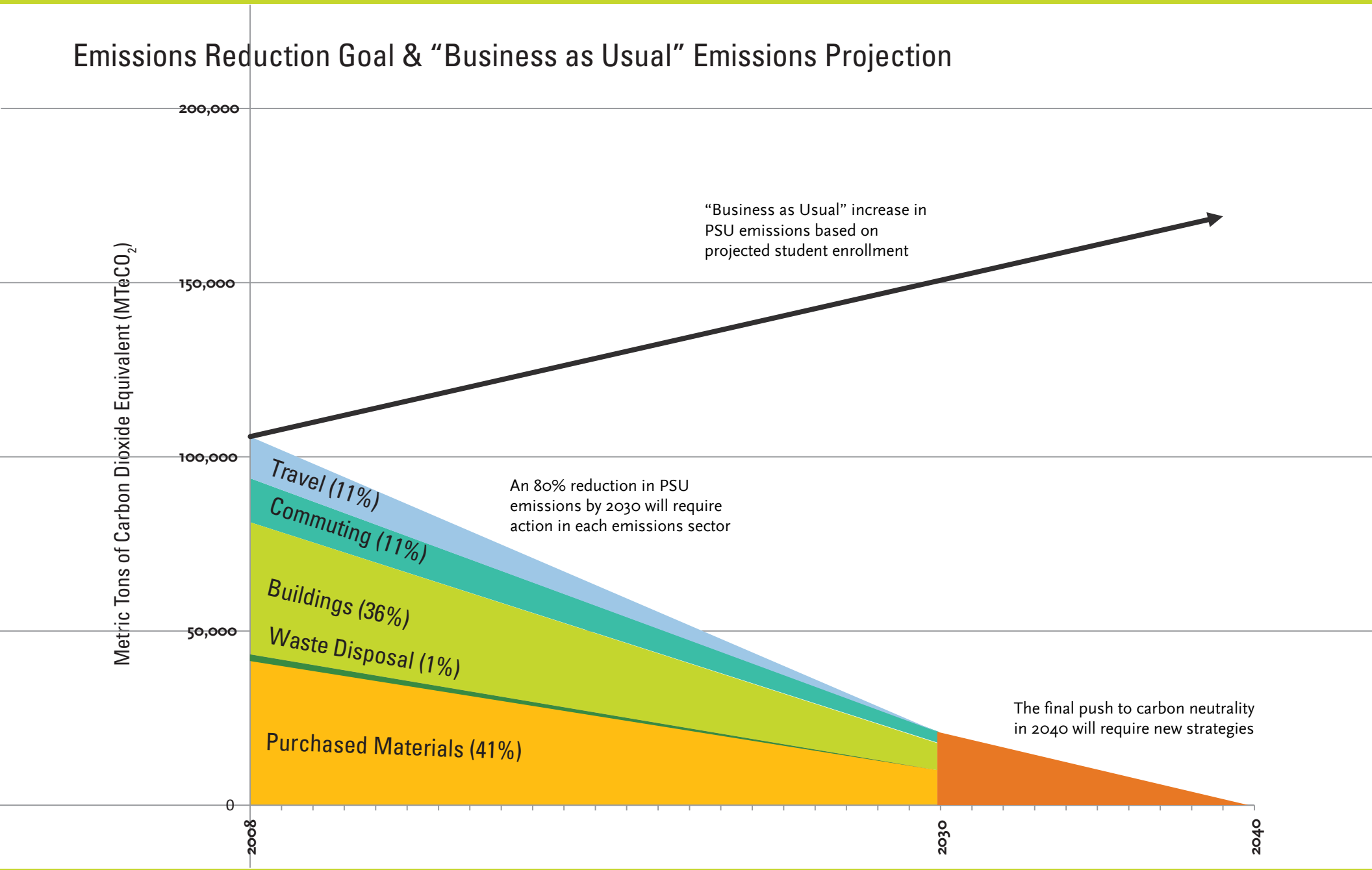

Establishing goals and setting targets will be an iterative and continuous process. The Climate Action Plan (CAP) will be adjusted and refined to reflect emerging knowledge and new resources that become available. Initial goals call for an 80% reduction in campus emissions by 2030 and carbon neutrality[8] by 2040 using 2008 as the baseline year.

The PSU Climate Action Plan calls for an **80% reduction** in campus emissions by 2030 and **carbon neutrality by 2040**.

The process of establishing initial goals and targets involved several considerations. At the highest level, the Plan mirrors many of the timetables set out in the City of Portland and Multnomah County's Climate Action Plan, which has medium term climate objectives for 2030 based on a 1990 baseline. Additionally, many of the targets in the Materials section echo the city's goals for waste reduction and diversion.

The planning team also looked at climate action plans from other universities to set goals and targets that would be achievable for PSU. For example, Oregon State University (OSU) sets out 2025 as the date to achieve carbon neutrality. This timetable is aggressive compared to many other plans; in large part, because it reflects OSU's ability to install a new combined heat and power[9] engine, which has led to a dramatic reduction in campus emissions. A goal of carbon neutrality by 2050 is common among universities that do not have the immediate capacity to implement major carbon reduction projects.

Major emissions reductions projects are more difficult to achieve at PSU, compared to a traditional university, due to the structural and political implications of being embedded in an urban context. However, the campus still does have some important infrastructural assets (such as a district energy system) and also a significant amount of momentum from students, staff and faculty to support emissions reductions projects.

Finally, PSU's goals and targets reflect the fact that PSU is a growing university, expected to increase by 12,500 additional students by the year 2039. Given growth projections, per capita emissions will need to decrease at a rate that exceeds the rate of reduction in total emissions.

Population Projections & Emissions Reduction Goal

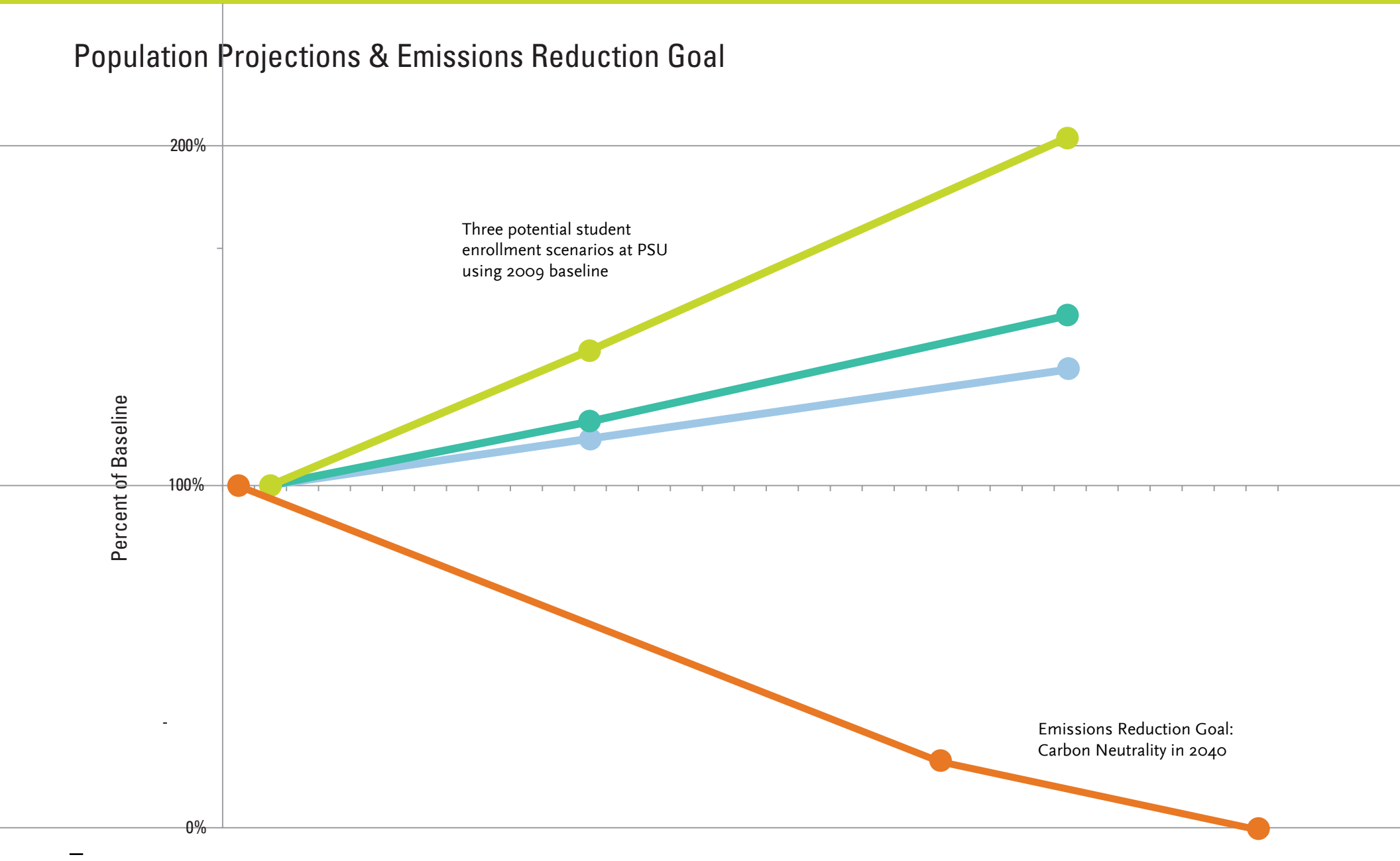

The Climate Action Plan (CAP) will be updated every three years to adapt its approach in light of technological, political, economic, and social changes in the region and world. Additionally, updated versions will reflect increased capacity and accountability within the PSU community. The updating process is designed to ensure that PSU's efforts around climate stewardship are never stagnant and continue to capitalize on new collaboration opportunities that fit within the scope of the Plan.

Future Tracking

The Campus Sustainability Office (CSO) will produce new greenhouse gas inventories for PSU for each fiscal year moving forward. The report for each fiscal year will be completed and presented in the following September. The one exception to this will be September 2010, when two inventories will be presented – FY 2009 and 2010.

Evaluation and Review

Progress Reports

CSO will be responsible for producing annual progress reports, which will evaluate actions taken in the previous year and suggest options for improvement or adjustments in resource allocation. The first of these reports will be completed in June 2011. Throughout the implementation process, some actions will be deemed more effective than others, and individual strategies will be refined based on successes and failures. Yearly progress reports will provide CSO with a platform for suggesting the incremental changes necessary to keep PSU on-track for hitting the 2030 Targets within the Plan.

Three-Year Planning Cycles

A short planning cycle is essential to keep up with rapid change in the fields of energy and climate mitigation. It also provides an opportunity for PSU to adjust to changing internal conditions related to fiscal climate, personnel capacity, and academic and funded research opportunities. During the third year, CSO will evaluate: actions completed and their impacts, actions not completed and barriers to completion, and changes in data gathering methods used on campus. By responding to these factors, CSO will be able to adjust goals and targets, as well as formulate new short- and mid-term (1-3 years) action items.

Collaboration

Throughout the planning process, CSO engaged individuals and groups across the organizational chart. As a result, the leaders of this Plan come from a range of PSU departments and academic disciplines. In order to assure short- and long-term progress toward emissions goals, it will be essential to provide ongoing support to the climate actions being taken by these groups.

Successful implementation of the Plan will require that members of the PSU and the University District communities are directly engaged in the actions of the Plan and have avenues for learning about and supplying feedback on strategies. CSO will take responsibility for ensuring ongoing participation within the PSU and Portland communities.

Resources

The major focus for this three-year planning cycle is to build the internal capacity necessary to effectively develop, implement, and track emissions reductions projects and activities. To absorb this additional workload, PSU will need to add one full-time equivalent member to the CSO staff. This person will also identify resources available through grants and partnerships, and ways to increase coordination of the sustainability efforts undertaken by staff, students, and faculty. Additionally, there will need to be monetary allocation or interdepartmental agreements that allow other administrative offices to take on emissions tracking and reduction projects in a manner that does not affect their overall workloads. In the longer term, significant resources will need to be allocated to finance feasibility studies, consultants, and project implementation.


009
Portland Streetca

The Plan is broken into six sections: **Buildings**, **Materials**, **Commuting**, **Travel**, **Research and Education**, and **EcoDistrict Development**. Each section focuses on an area of PSU's operations and programs that plays a vital role in affecting greenhouse gas (GHG) emissions levels on campus. For ease of reading, the sections are separated from each other; however, many of the actions items in each section overlap with, reference, and/or support actions contained within a different section. The hope is that with each update of the Plan, the level of integration and cross-section awareness will continue to increase.

Sections

Buildings: Outlines actions for increasing the efficiency of campus systems, reducing energy demand on campus, increasing the amount of on-site renewable energy production, reducing emissions through better utilizing campus space, and tracking new climate change building codes.

Materials: Outlines actions for increasing the campus waste diversion rate, reducing overall waste production, and decreasing the embodied emissions associated with the extraction, manufacturing and transport of materials, goods, and foods consumed as a result of campus activity.

Travel: Investigates methods for decreasing the carbon intensity of campus travel and outlines the developmental steps for establishing a voluntary program that offsets campus travel emissions by investing locally in renewable energy, energy efficiency, and clean energy projects.

Commuting: Outlines actions for reducing drive alone trips to campus, reducing the per capita trips made to campus, and decreasing the carbon impact of vehicles used to commute to campus.

Research and Education: Outlines actions for increasing the global recognition of sustainability research and education at PSU and details preliminary steps for establishing an institutional structure for integrating operations and academic efforts around emissions reduction.

EcoDistrict Development: Discusses the "EcoDistrict Initiative" as it impacts PSU, and then outlines actions for establishing a governance system to manage the district and meeting the overall goals of the initiative.

Each section of the Plan contains the following elements:

1. Ongoing Efforts: Significant work is underway to mitigate greenhouse gas emissions at PSU. These existing activities and programs, and the resources needed to sustain them, are described in each section.
2. 2030 Targets: Each section addresses multiple challenges, each of which are associated with a unique measure. The 2030 Targets aggregate this information into a single measure to indicate whether or not the University is on track to meet the overall 2040 goal for the section.
3. One- to Three-Year Actions: Actions are the incremental steps led by department personnel to move PSU toward long-range goals and targets. These short-term actions may be new initiatives or they may represent an expansion of existing efforts. They will be completed – or reach a major milestone – within three years after the Plan's adoption. Taken together, the actions comprise a three-year strategic plan.
4. Long-Term Actions: Based on current limitations, such as political change and time or capacity constraints, not all of the desired actions will fall within a one- or three-year timeline. Long-Term Actions reflect ideas that aren't feasible to complete within the three-year time frame.

Key Terminology[10]

Some essential terms and phrases are used repeatedly throughout the Plan:

Association for the Advancement of Sustainability in Higher Education (AASHE): an association of colleges and universities working to create a sustainable future.

American College and University Presidents Climate Commitment (ACUPCC): an effort to accelerate progress towards climate neutrality and sustainability by empowering the higher education sector to educate students, create solutions, and provide leadership-by-example for the rest of society.

Carbon Dioxide (CO_2): the chemical compound containing one atom of carbon and two atoms of oxygen.

Carbon Dioxide Equivalent (CO_2e): the quantity of a greenhouse gas multiplied by a Global Warming Potential (GWP) factor, relative to CO_2. This is the "standard unit" used to quantify various greenhouse gasses.

Carbon Offsets: reductions of greenhouse gases that can be used to counteract emissions from other activities, measured in metric tons of CO_2e. While similar, carbon offsets are not the same as Renewable Energy Certificates (RECs).

Energy Use Index: a measure of energy use from electricity and natural gas expressed in Kilo British Thermal Units (kBtu) and normalized by the total square footage of a building.

Greenhouse Gas (GHG): any gas that contributes to global warming including, but not limited to, carbon dioxide, methane, nitrous oxide, hydrofluorocarbons, perfluorocarbons, and sulfur hexafluoride.

Intergovernmental Panel on Climate Change (IPCC): a scientific body established to provide policymakers with an objective source of information about climate change.

Metric ton, tonne, or metric tonne (t): One metric ton is 1000 kilograms or 2204.62 pounds.

Mode Split: the proportion of people that use each of the various types of transportation. For PSU, this phrase refers to the different modes of transportation used for trips to and from campus.

Renewable Energy Certificate (REC): a tradable certificate that represents a unit of energy produced by renewable energy sources. Owners of RECs can claim that they are using renewable energy equal to the amount of RECs they own.

University District: refers to the southern area of downtown that is anchored by PSU and overlaps with portions of the Downtown and Corbett-Terwiliger-Lair Hill neighborhoods.

Action Terms

Throughout the CAP, action terms are used in conjunction with "One- to Three-Year Actions" to designate particular categories of action, including:

***Standard Operating Procedure (SOP) Change*:** Signifies that a specific action, question, or project requires an evaluation and/or policy change that would impact standard operating procedures at PSU.

***EcoDistrict Development*:** Signifies that a specific action, question, or project reaches beyond the PSU-owned boundary and affects surrounding properties[11].

***Research Project*:** Signifies that the specific action is meant for class and/or academic research work. The action will not happen without student/faculty assistance.



Energy Use Index: History and Target

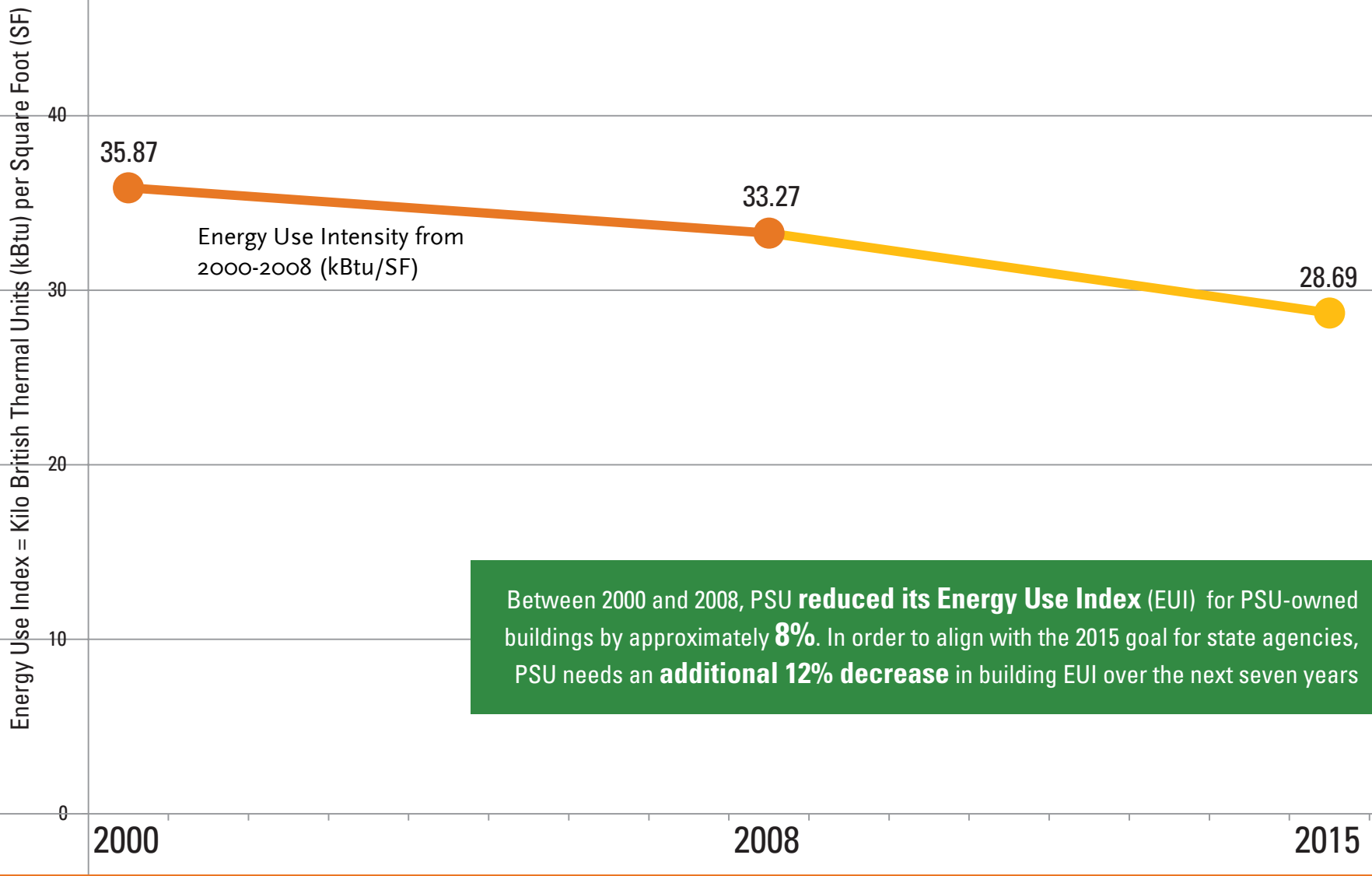

Between 2000 and 2008, PSU **reduced its Energy Use Index** (EUI) for PSU-owned buildings by approximately **8%**. In order to align with the 2015 goal for state agencies, PSU needs an **additional 12% decrease** in building EUI over the next seven years

2030 Targets & Actions: Buildings

By 2039, PSU plans to increase enrollment numbers by 12,500 students. This growth will place additional demand on current campus facilities, and it will also require significant amounts of new construction[12]. As a result, PSU's ability to meet carbon and energy reduction goals will depend on careful planning and decision-making about class scheduling, building programming, building maintenance, energy use, renovation, new construction, and on-site renewable energy generation.

Operating campus buildings is the second largest contributor to the campus greenhouse gas (GHG) profile, accounting for 36% or approximately 38,000 $MTeCO_2$ of annual emissions. These emissions are limited to those from natural gas and electricity. Emissions from construction, demolition and materials consumed within the buildings are included in the "Materials" section of the CAP.

Actions contained within this section consist of the following:

- increasing efficiency of heating, ventilation, and air conditioning (HVAC) systems
- reducing on-site demand for energy
- increasing on-site renewable and clean sources of energy
- improving efficiency of space utilization in campus buildings
- tracking and implementing new building code requirements for climate mitigation and adaptation[13]

The CAP explores efficient and affordable methods for emissions reductions in all areas of interest.

Five PSU buildings have been certified through the U.S. Green Building Council's Leadership in Energy and Environmental Design (LEED) program, including two gold and three silver buildings. The State of Oregon requires all new buildings to meet the LEED silver standard.[14] Additionally, PSU is a key partner in the proposed Oregon Sustainability Center[15], a project designed to be the largest living building in the nation[16]. PSU is also excelling in the area of green building research, as professors and students investigate technologies and questions around green roofs, energy efficiency, and more.

Achieving dramatic reductions in building-related emissions will require a continuous push to localize energy demand management and supply. This trend can have the residual benefits of:

- Increasing community awareness of and response to energy conservation projects and campaigns
- Reducing institutional vulnerability to future spikes in energy prices
- Increasing energy security (lower risk for blackouts or brownouts)

PSU Facilities & Planning (FAP), Auxiliary Services (AUXS), and the Campus Sustainability Office (CSO) will lead the actions in this section. The successful completion of these actions will require ongoing coordination of these departments with PSU Finance & Administration (FADM), the FAP Systems Shop, and the Energy Trust of Oregon.

CAP = Climate Action Plan
CSO = Campus Sustainability Office
TAPS = Transportation and Parking Services
BPS = Bureau of Planning and Sustainability
FADM = Finance and Administration
AUXS = Auxiliary Services
FAP = Facilities and Planning
PoSI = Portland Sustainability Institute

Ongoing Efforts

PSU has already undertaken actions that support the effort to reduce emissions associated with building energy usage. These projects must be continued to reach the goal of climate neutrality by 2040.

Ongoing Activity/Program	*Lead Office*	*Program/Activity Age (years)*	*Target*
Steam loop efficiency upgrades	FAP	2	#3
Central deployment of power conservation settings for all desktop computers and network printers based on findings from Human Resources pilot	OIT	1	#1
Lighting upgrades in housing buildings	AUXS	2	#3
Energy conservation competition (a pilot project in the Broadway Housing Building)	CSO, Res. Life	0.5	#1
Achieving LEED Silver or better for all new buildings and major renovations	FAP	6	#5
Case study on integrating "smart grid" technologies at the PSU campus	CSO	1	#1
Utility data consolidation project, including energy use in leased space to increase accuracy of GHG inventory	CSO, FAP, AUXS	1	All
Campus utility metering assessment and installation	AUXS, FAP, CSO	0.5	#1
Nighttime energy audit pilot with scorecards for building occupants	CSO, FAP	0.3	#1
Investigation of bundling and selling BETC credits	CSO, FAP	0.1	#2

2030 Target #1

Reduce energy use per square foot 25% below 2000 levels through demand management practices.

The least costly energy reductions can be achieved through demand reduction. To reduce demand, the University can provide information and incentives to energy users, while simultaneously increasing their capacity to adjust personal energy use.

One-Year Actions

- Using the 2010 building energy competition[17] pilot project in PSU's Broadway Housing Building as a model, develop a strategic plan for expanding energy savings competitions to other residence halls. This would include a year-round education and awareness campaign, including an online video.
- Adopt an energy policy that includes Energy Star standards for appliances, authorizing OIT to establish central power management for staff computers, building temperature set points, a list of non-essential personal appliances (space heaters, refrigerators, coffee makers, etc.). *(SOP Change)*
- Develop a comprehensive energy conservation education program for academic buildings that:
  - provides clear information dispelling myths and providing motivation for behaviors/issues identified during the nighttime energy audit pilot[18]
  - provides recognition for building occupants who reduce their nighttime base energy load

- requires energy conservation briefings to all new employees
- formalizes Green Teams in each department

Three-Year Actions

- Build an energy use display system for the eight largest buildings on campus[19] that graphically displays consumption levels in real-time format.
- Install energy efficient surge protectors at all employee workstations on campus and teach people how to use them – Energy Trust rebates may be available.
- Determine the feasibility and impact of PSU participating in the City of Portland's High Performance Building program. *(Research Project)*

2030 Target #2

Generate 80% of total building-related energy use from local, renewable sources.[20]

Reaching carbon neutrality will require an eventual shift to renewable energy for electricity, heating and cooling. Energy efficiency efforts, demand management, and better building usage, will help reduce the intensity of energy use per square foot of campus buildings. Continued efforts to localize and clean PSU's energy supply will also help decrease PSU's sensitivity to electricity and gas prices and increase overall energy security at the University.

One-Year Actions

- Analyze the potential to integrate light harvesting[21] into new building plans, as well as retrofits in existing buildings. *(Research Project)*
- Continue to work with the OUS Chancellor's Office to explore third-party agreements for photovoltaic array installation.
- Based on research by engineering faculty, suggest an alternate location or use for $50,000 earmarked for an urban wind energy system by the Chancellor's office[22]. *(Research Project)*
- Research funding mechanisms used by other universities and institutions that have installed large wind turbines (Appalachian State University, University of Vermont, University of Minnesota, etc.). *(Research Project)*

Three-Year Actions

- Perform an anaerobic digester[23] study with the Portland Sustainability Institute to look at feedstock needs and sources for a digester, as well as siting and economic concerns.
- Conduct surveys and targeted interviews with students, faculty, and staff to identify ideal locations on campus for renewable energy installations based on visual impact, instructional value, and technical feasibility. *(Research Project)*
- Perform an analysis of the impacts of using biomass in PSU district energy system. *(Research Project)*

Building Energy Use by Type in 2008 (kBtu)

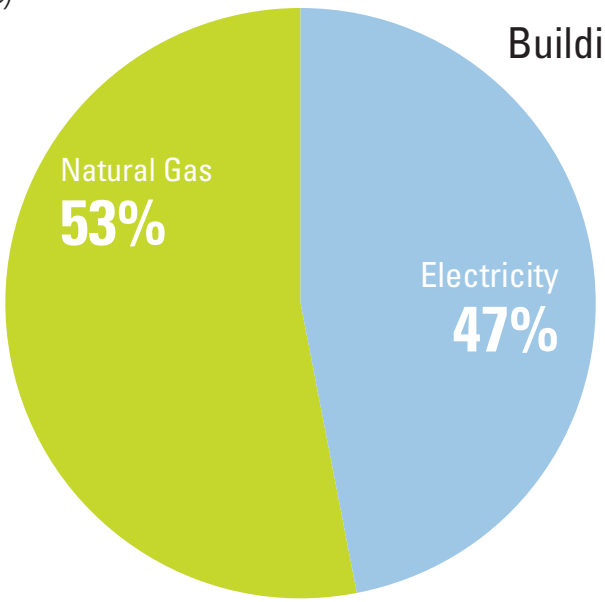

2030 Target #3

Increase efficiency of the energy systems by 50% (using a 2000 baseline).

The University's energy systems[24] – both the district energy system and the systems in individual buildings – have untapped potential for money and energy-saving retrofits and upgrades. The actions in this section focus on increasing the resources and decision-making capacity necessary to accelerate the University's investment in existing energy systems. PSU can also improve information systems and integrate data into current managerial systems, allowing the operations sides of the University to better respond to shifts in energy needs.

One-Year Actions

- Revisit the combined heat and power application submitted to the U.S. Department of Energy in the summer of 2009, performing a more detailed pro forma, analyzing other potential funding sources, aligning with the PSU Framework Plan, and reevaluating the scale of the project. *(EcoDistrict Development)*
- Reinvest the money currently spent on Renewable Energy Certificates into on-site efficiency or capacity-building improvements, such as metering. Consider formalizing the duties, responsibilities, and team roles of the Energy Fund Management Team. *(SOP Change) (EcoDistrict Development)*
- Complete an analysis of current waste heat loads on campus and the potential to harvest these loads and integrate them into the campus steam loop. *(EcoDistrict Development)*
- Create a standard schedule, long-term maintenance strategy, and funding mechanism for building retro-commissioning (also known as continuous commissioning). *(SOP Change)*[25]
- Apply energy performance ratings to all campus buildings through the Energy Star Portfolio Manager program.
- Research other public entities that have implemented workforce training programs in clean technologies. *(Research Project)*

Three-Year Actions

- Hire a utility manager to oversee PSU's $6.6 million utility budget and develop a comprehensive energy management program. This includes metering utilities for each building on campus.
- Develop a high level scan of available smart grid technologies and their potential use at PSU. *(Research Project)*
- Review and update the PSU District Energy Plan completed in 2007 and prioritize six capital improvement projects that will support Target #3. *(EcoDistrict Development)*
- Incorporate energy efficiency measures in Facilities and Planning 'Design Standards.' Apply these standards across campus, including in housing buildings (i.e. when a renovation is taking place, replace single pane windows with models that have U-values lower than .30) Review design standards for climate adaptation – given anticipated increases in summer temperatures. *(SOP Change)*
- Establish protocols for gathering baseline utility data from new building acquisitions. (SOP Change)
- Develop protocols and standards for using the best HVAC technology wherever possible, including raising upper limit on datacenter temperature and cool aisle ceiling design. *(SOP Change)*
- Initiate discussions with surrounding property owners about expanding the steam loop beyond PSU boundaries. *(EcoDistrict Development)*

2030 Target #4

Reduce total energy use by 10% (using a 2000 baseline) through better utilization and scheduling of buildings.

Current space utilization practices are considered to have a negative impact on the overall efficiency of PSU energy usage. Efficient use of residential, classrooms, and office space can delay the need for PSU to acquire or develop new buildings.

One-Year Actions

- Develop a way to analyze energy intensity that factors campus population change into the Energy Use Index (EUI) kBtu/square foot to ensure that higher room utilization rates support (rather than counter) the energy intensity goals of the CAP.
- Use the PSU Framework Plan, and the work of the Space Committee, to develop a baseline for classroom usage for 2008-2009.
- Work with the Space Committee to develop new models for space allocation that help achieve CAP goals. *(EcoDistrict Development) (Research Project)*

Three-Year Actions

- Assess links between CAP goals and Office of Academic Affairs' effort to convert some courses to online or hybrid format.
- Create an analysis tool that tracks and visually displays the usage and densities of people in all campus buildings.
- Using PSU's new scheduling software, assess opportunities to improve scheduling and fees related to the use of general pool classrooms, departmentally controlled classrooms, weekend events, HVAC zones, custodial services, and campus security services.
- Adopt a standard metric for analyzing new building purchases based on their current ability and future potential for increasing building utilization levels. *(SOP Change)*



37

2030 Target #5

Track and integrate all revisions to the commercial buildings code that deal with climate change.

The world of climate change adaptation and mitigation is moving at a rapid pace, as universities, governments, non-profits, and private sector members pioneer new strategies to address climate issues. Therefore, it is vital that PSU tracks, reviews, and selectively incorporates new practices in the realms of climate mitigation and adaptation.

One-Year Actions

- Track the Oregon code redevelopment process, which discusses methods for buildings to adapt to the physical impacts of climate change[26].
- Track code improvement efforts within the City of Portland, such as the recent RICAP 5, which was completed in early 2010[27].
- Track progress on the process to revise the Oregon building code to match the targets of Architecture 2030[28].

Three-Year Actions

- Integrate relevant pieces of Architecture 2030 into PSU's building polices.
- Assess skills of existing maintenance personnel to determine what training or additional capacity is needed to care for new system changes outlined in the CAP, such as new renewable and clean energy and smart grid systems.

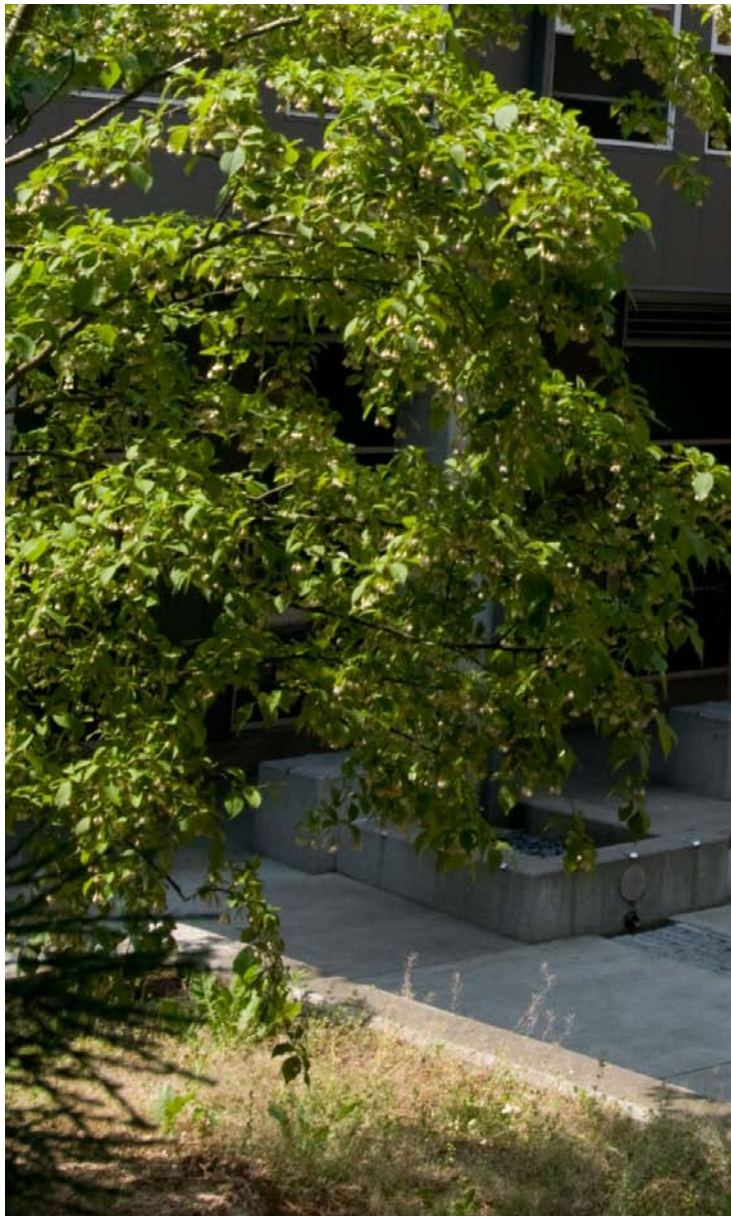

38



Long-Term Actions

2030 Action #1

Connect building occupants with energy data through real-time energy dashboards in 75% of campus buildings.

2030 Action #2

Participate in a utility feed-in tariff for small wind, solar PV, biomass or plant-derived natural gas in the University EcoDistrict.

2030 Action #3

Require that contractors partner with a local workforce training organization to provide job opportunities for underprivileged individuals. (SOP Change)

Solid Waste Generation & Diversion Targets

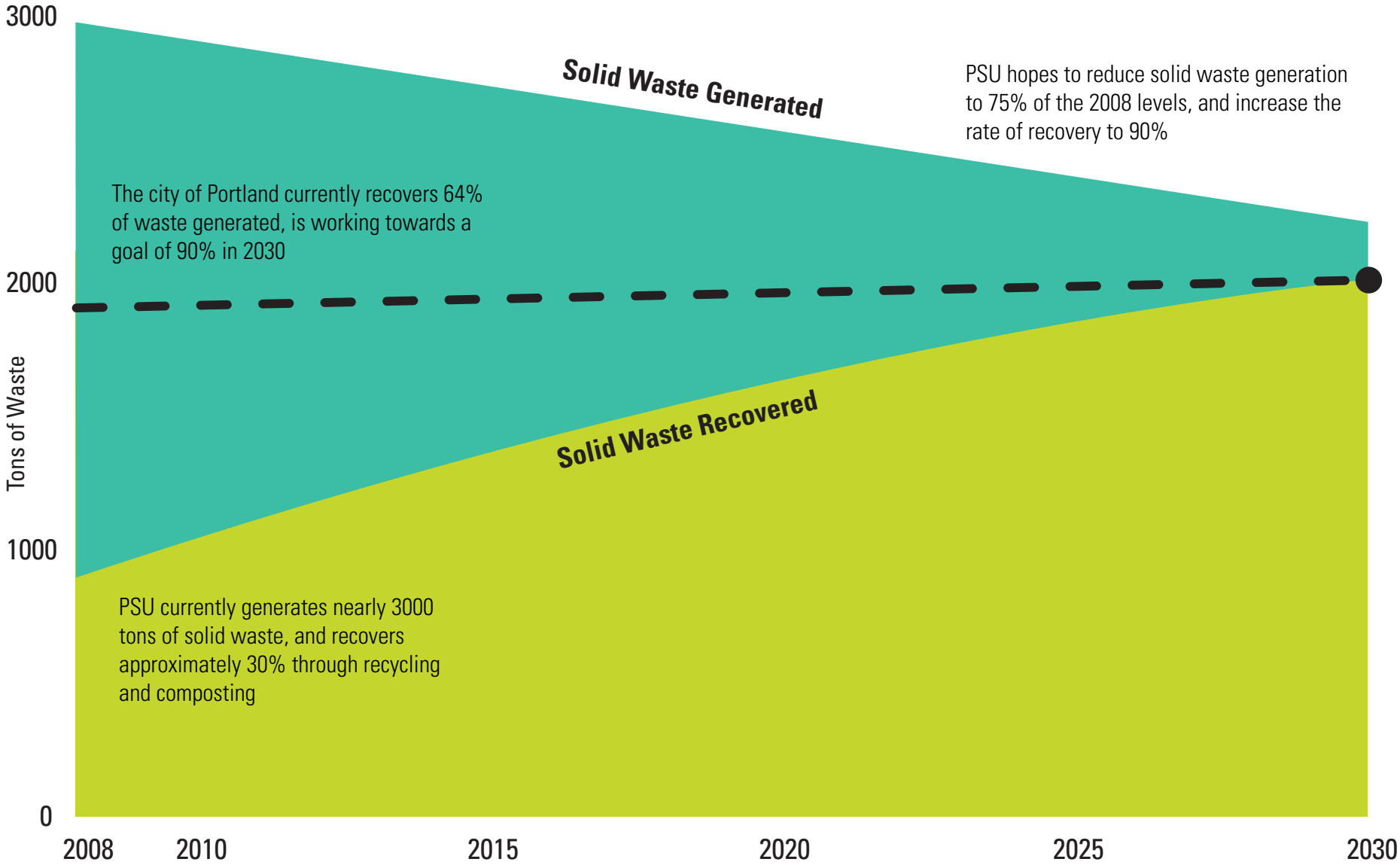

2030 Targets & Actions: Materials

Based on 2008 estimates by Good Company, material resource flows[29] at PSU contribute 41% or approximately 43,000 MTeCO2 of annual campus emissions. Until recently, calculations of emissions from material goods have underestimated the importance of this category. In light of recent revisions to the calculations used both at the federal level by the EPA, and at the regional level by Metro, the PSU CAP now includes emissions from raw material extraction, production and transportation of goods and services which pass through campus, including the PSU food system.

Based on overall weights recorded and tracked by the University's contracted waste hauler, Trashco, disposal rates of material goods have been relatively steady for the past few years. Since 2008, coordination between PSU's food service provider (Aramark) and the City of Portland's business composting program has reduced the amount of organic waste being sent to the landfill. "Victor's at Ondine" dining hall has taken important steps to eliminate unnecessary waste streams by using durable service-ware and adopting trayless dining and "back of the house" composting. This is a progressive model that should be expanded if the University is to reach the dramatic waste reduction goals outlined in the Plan.

To reach the 2030 Targets outlined in this section, the strategies for materials, goods and foods rely on solutions that address both the physical and social organizational challenges. This Plan highlights infrastructure upgrades and progressive contract improvements needed to address the physical components of emissions reductions and the civic engagement needed to fully implement required changes.

The current approach to handling materials, goods, and foods at PSU can be characterized as somewhat disjointed. For example, individual departments purchase office supplies from multiple companies, often without contracts. This makes it difficult to track consumption rates and purchasing habits. Furthermore, the recycling system is hindered by the lack of consistency in recycling receptacles, which leads to confusion among users and high contamination rates. In general, there is a piecemeal approach to servicing campus garbage and recycling stations, with responsibility shared among the staff of PSU Recycles! and contracted custodial services.

While recycling in the Portland region has its roots at PSU, with the founding of the Portland Recycling Team (PRT) in 1970, an official recycling program for the University was not launched until recently. In 2003, an innovative contract with waste hauler Trashco helped to incentivize the overall reduction of landfill-bound waste. At the same time, PSU signed a dining services contract that outlined a strategy for avoiding waste and improving food sourcing for campus dining facilities and catered events. Currently, the weight of trash, recycling, and compost taken from campus is an aggregate figure provided by the waste hauler without further breakdown by building or area of campus.



CSO=Campus Sustainability Office
AUXS=Auxiliary Services
FAP=Facilities and Planning
CES=Community Environmental Services
EPA=Environmental Protection Agency
DEQ=Department of Environmental Quality
Metro=Portland Metropolitan Regional Government
PRT= Portland Recycling Team

The actions and targets described in this section address the primary goal of emissions reduction and simultaneously tackle additional University priorities by: building partnerships with surrounding downtown businesses (in the development of an EcoDistrict "waste-shed")

- proposing substantive opportunities for real-world student experience through increased collaboration between academic and operational departments
- reducing the overall costs associated with wasted materials, goods, and foods at PSU by preventing unnecessary waste from the front-end
- consolidating waste streams for better management on the back-end
- positively influencing the behavior of students and staff by changing perceptions of "waste" though education and outreach

Implementing the recommendations in the Materials section will require the coordinated efforts of a number of programs and departments, both within the University and through community partnerships. It will also require prioritizing the flow of materials, goods, and foods as a key consideration in the assessment of PSU's emissions. The primary responsibility for seeing actions through will fall to PSU Recycles!, FAP, and CSO, with support from Community Environmental Services (CES), Trashco, and the Dining Services and Custodial Services contractors.



Ongoing Efforts

PSU has already undertaken actions that support the targets in this section. These practices must be continued in order to reach the goal of climate neutrality by 2040. Below is a list of these activities or programs:

Ongoing Activity/Program	*Lead Office*	*Program/Activity Age (years)*	*Target*
ReUse center for exchanging surplus office supplies	PSU Recycles!	6	All
Chuck it for Charity at the close of the year	PSU Recycles!	5	All
Public composting (pilot program)	PSU Recycles!	0.25	#2
Low waste dining initiative at Victor's (located in Ondine)	AUXS	0.4	#1
Event compost support	PSU Recycles!	1	#2
Waste reduction education and outreach	PSU Recycles!	6	All
"Its all in the hall" bin consolidation project	PSU Recycles!	1.5	#2
Servicing public recycling bins in residences halls	PSU Recycles!	6	#2
Servicing public recycling bins in academic buildings	PSU Recycles! Custodial Service Provider	6 1.5	#2
Extra support for residence hall move-in recycling at the start of the term	PSU Recycles!	5	#2
Reuse of surplus office furnishings	FAP Shipping & Receiving	10+	All
Tracking consumption of major commodities (copy paper, paper towels, toner, etc.)	CSO	1	All

2030 Target #1:

Reduce solid waste generated[30] on campus by 25% (using a 2008 baseline). (waste prevention target)

For the most part, current materials procurement and disposal systems at PSU fail to discourage waste prevention. To reach deep carbon reductions in materials use, a paradigm shift will be needed. This shift will require a continued investment in physical systems and changes in business practices. However, it will also require continuous education to embed materials reduction and reuse into everyday actions on campus.

One-Year Actions

- Write a three-year strategic plan for recycling at PSU that outlines strategies for increasing capacity, analyzes benefits and costs of the program, sets goals, explores a partnership with CES, and proposes a long-term funding structure for the program.
- Develop a strategy for collecting accurate baseline data for material waste generation on campus.
- Establish printing standards for campus, require all new printers to be duplex-capable, and ensure that all existing duplex-capable printers are set to duplex by default. *(SOP Change)*
- Analyze the benefits of adjusting the free printing limit for students in labs from 500 to 250 per term.

- Identify barriers and opportunities for eliminating bottled water from all PSU-sponsored catered events, departmental offices, and student group activities. *(SOP Change)*
- Expand the education and outreach campaign supporting reusable cups and containers on campus.
- Complete a feasibility analysis and timeline for composting all waste from catering and dining facilities on campus and switching to durable service-ware. *(Research Project)*

Three-Year Actions

- Create a centralized tracking system for purchases of high volume campus goods. *(SOP Change)*
- Explore options that can be included in a new dining service RFP with zero waste goals – adopting those of Victor's at Ondine. *(Research Project)*
- Establish formal relationships with reuse institutions like the ReBuilding Center, ReStore, and TerraCycle.

2030 Target #2:

Reduce landfill-bound waste to 10% of total waste generated (diversion target).[31]

The goal of the Materials section is to incrementally transition the PSU campus toward a zero-wasting environment over the next 20 years. Therefore, it is paramount that the University continues to increase its capacity to capture and divert usable materials from the landfill.

One-Year Actions

- Revise custodial and dining services contracts as they relate to recycling and compost.
- Expand education and outreach for recycling and composting to specifically target student leaders, new student orientation, new employee orientation, and residence halls.
- Establish a waste reduction coordinator for the athletics department who is tasked with increasing diversion rates at athletic events.

Three-Year Actions

- Establish standards and a funding mechanism for consistent indoor and outdoor recycling stations. *(SOP Change)*
- Create a centralized system for tracking diversion rates for new construction, major renovation, and in-house remodels. *(SOP Change)*
- Explore the feasibility of creating a waste-sorting program. *(Research Project)*

2030 Target #3:

Reduce embodied emissions for select commodities by 25% (using a 2008 baseline).[32]

To take meaningful action on emissions, PSU must address the true impact associated with the consumption of materials, goods, and foods. The University has not developed a rigorous tracking system for embodied emissions, but the plan still includes this level of analysis in order to raise the University community's awareness about waste reduction and to support behavioral changes.

One-Year Actions

- Develop a paper-reduction and awareness campaign to help departments reduce copy paper use by 30% and purchase paper with at least 30% post-consumer recycled content[33] [34].
- Evaluate opportunities to increase low carbon food purchasing by Food for Thought Café and the dining services contractor. *(Research Project)*

- Partner with DEQ to develop a strategy to refine data collection methods for materials, goods, and foods embodied emissions data.
- Write a food action plan that evaluates current food purchasing policies and performance at the University, develops steps to align with the Multnomah Food Initiative, and increases the amount of low carbon food consumed on campus. *(Research Project)*

Three-Year Actions

- Enforce or work with a contractor to modify food purchasing contract requirements for dining services based on the evaluation done in year one. *(SOP Change)*
- Write a landscape plan for the University that aligns with the PSU Framework Plan and the food action plan.

Long-Term Actions

2030 Action #1

Hire a full-time staff person to develop and coordinate a reuse program for the University that focuses on buying used and local products for campus use whenever possible.

2030 Action #2

Develop a phased program for removing excess trash receptacles on campus.

2030 Action #3

Incorporate embodied emissions analysis into the decision-making processes for purchasing materials, goods, and foods.



In fiscal year 2008, PSU purchased at least **147 tons of copy paper**. If this were assembled into a stack, the pile would be **1.9 miles high, or 90% the height of Mt. Hood**. 100 metric tons of CO_2 and **$100,000** could be saved if PSU set a 30% paper reduction goal.

PSU-Sponsered Travel in FY 2008

9,378,428 air miles *(includes study abroad)*

562,590 car miles *(includes reimbursement for personal car use, Enterprise rentals and Zipcar rentals)*

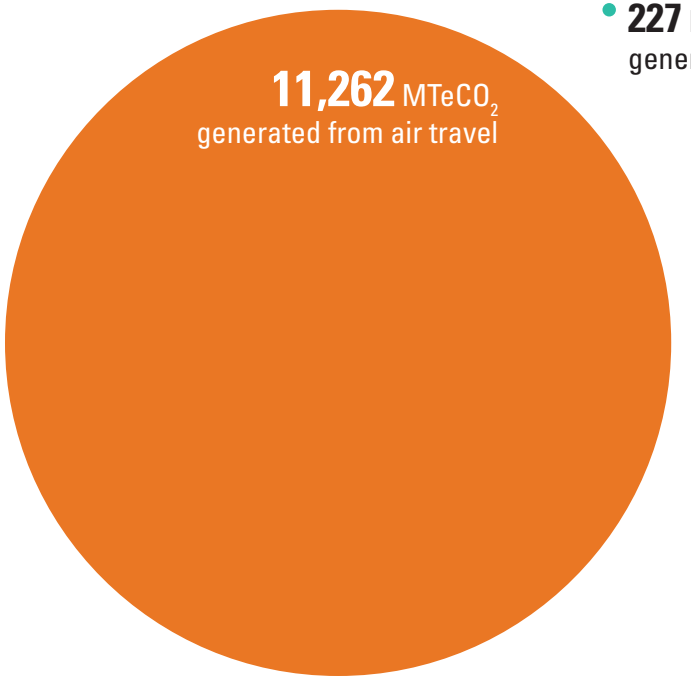

227 $MTeCO_2$
generated from car travel

17 X more miles traveled by air

50 X more carbon emitted from air travel

2030 Targets & Actions: Travel

Travel is an essential component of academia at PSU, strengthening faculty engagement in national and international discourse. As the colleges within PSU have grown stronger, travel has increased. In the past 20 years miles from travel have risen, reaching nearly 10 million miles in fiscal year (FY) 2008[35]. This equates to over 30 round trips to the moon. FY 2008 emissions from travel amounted to approximately 12,000 MTeCO2, or 11% of PSU's emissions.

The State of Oregon, the Oregon University System (OUS), and the Internal Revenue Service (IRS) determine many of the governing rules for PSU-funded travel. At times, these guidelines require travelers to choose carbon intensive forms of travel over less intensive options. As a result, there are some barriers that can be addressed at PSU, but most must be addressed through OUS. All OUS members have signed on to the American College and University Presidents Climate Commitment (ACUPCC), resulting in a statewide discussion and overall awareness about travel emissions.

Because travel tracking (for climate impact) was not an institutional priority until recently, PSU has very little historical data on travel patterns and limited information on travel mode split. In order to take meaningful actions to reduce travel emissions, data tracking systems will need to be established, and this will require additional resources.

This Plan outlines opportunities for engaging faculty, staff, and students in exploring the University's travel impacts. As a result, PSU administration will have sufficient information to improve campus travel policies, and the campus population will also be more engaged and aware of their travel impacts.

Although emission reductions are the primary goal of the actions in this section, there are a variety of additional benefits that could potentially arise from travel alternatives. Implementing programs and raising awareness about less carbon-intensive travel will connect faculty who normally do not interact, save time and money through reduced or more efficient travel,[36] and provide a means for internalizing the emissions costs associated with travel.

CSO will complete the bulk of the actions in this section; however, many of the actions will require significant and continual coordination with the BAO, OUS, the Provost, the academic Deans, and OIT.



CAP=Climate Action Plan
CSO=Campus Sustainability Office
BAO=Business Affairs Office
TAPS=Transportation and Parking Services
BPS=Bureau of Planning and Sustainability
IRS=Internal Revenue Service
OUS=Oregon University System

Ongoing Efforts

PSU has already undertaken actions that support the targets in this section. These practices must be continued in order to reach the goal of climate neutrality by 2040.

Ongoing Activity/Program	*Lead Office*	*Program/Activity Age (years)*	*Target*
Exploring ways to streamline data tracking university-sponsored travel – data needs include expenditures, destination, and mode of travel	BAO, OIT, CSO	1.3	#2
Complete FY 2009 baseline Sources of data include: travel agencies, P-card transactions, Enterprise vehicle rental, ZipCar, RAZ chartered buses, reimbursements for use of personal vehicles	CSO	0.75	#1

2030 Target #1

Maintain 2010 levels of travel emissions.

Over the next 20 years, PSU employee and student travel will grow if steps are not taken to provide alternatives. In response, PSU will:

- develop viable distance communication options that can be used to avoid travel in certain circumstances
- provide greater awareness about available lower carbon travel options
- remove many of the internal and OUS-wide barriers to choosing lower-carbon forms of travel

Engaging in these activities will allow PSU to use fewer emissions per unit of travel, thus accommodating an increase in total travel while maintaining current travel-related emissions levels.

One-Year Actions

- Identify barriers that hinder faculty, staff and students from choosing low carbon forms of travel, and then communicate those barriers to PSU Administration, OUS, and the Chancellor's office.
- Request that the OUS Sustainability Initiatives Committee convene a working group to discuss barriers and share solutions related to travel.

- Identify departments with the highest travel expenditures and conduct interviews with faculty and staff to gain a better understanding of departmental travel patterns and options for trip reduction or switching to less carbon-intensive means of transportation. *(Research Project)*
- Forecast 10-, 20-, and 30-year projections for PSU travel rates. *(Research Project)*
- Promote CarPoolMatchNW for events being held at PSU and for employees attending events elsewhere.

Three-Year Actions

- Draft a strategic plan with OIT and Network & Telecom Services to increase the University's capacity to meaningfully engage in distance communication and distance conferences.
- Develop a centralized system for tracking faculty and staff trips that has the capacity to connect faculty/staff who plan to attend the same events so they can coordinate travel modes/costs. *(SOP change)*
- Identify all opportunities to educate PSU employees and students about climate impacts of travel and alternatives; develop online training resources that provide tips and awareness about green travel.
- Consider adding a box on travel forms where the travel applicant can acknowledge his/her carbon impact by listing miles or simply signing a statement. *(SOP change)*
- Develop a tool that allows PSU managers to understand trade-offs among travel costs, time expenditure, and mode of travel when approving employee travel requests. *(Research Project)*

2030 Target #2

Establish a local offset program for travel that is used by 75% percent of travelers.

One-Year Actions

- Research best practices and lessons learned from other institutions to develop a methodology for collecting, administering, and assessing progress of a voluntary carbon offset program. *(Research Project)*

Three-Year Actions

- Complete an outreach and communication campaign, targeting employees and students, that provides information about the costs and benefits of a carbon offset program and evaluates willingness to participate.
- Work with BPS and Metro to develop a list of PSU-campus and regional emissions reduction projects that would be strong candidates for receiving funding from a voluntary carbon tax on travel.
- Through CSO administration, implement and monitor a carbon offset program for travel emissions. *(SOP change)*
- Record and communicate the emissions and total cost reductions associated with the voluntary carbon offset program.

Long-Term Actions

2030 Action

Implement a travel offset program for all departments.

PSU Student Mode Split History

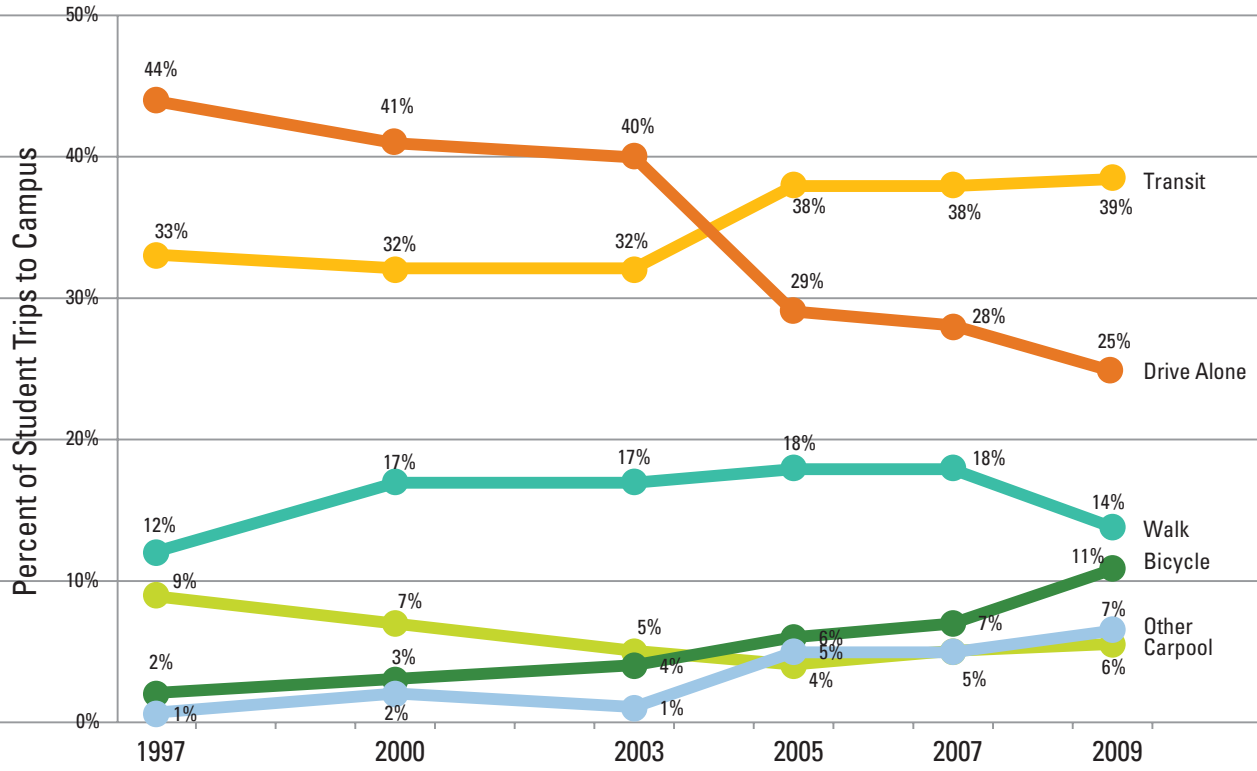

*Other includes responses: "other," "motorcycle/scooter," and "was dropped off"

PSU Student Mode Split 2009

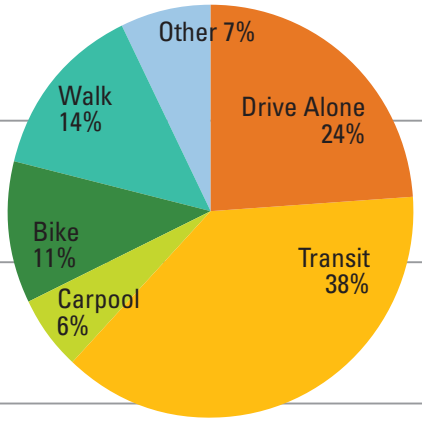

PSU Student Mode Split 2030

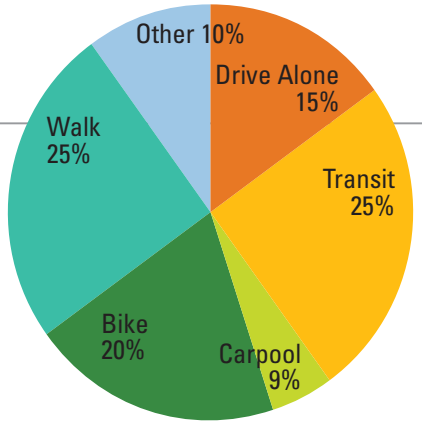

2030 Targets & Actions: Commuting

Universities are not formally required to offset greenhouse gas (GHG) emissions borne by commuters, but these emissions are still tracked in climate action plans because it is incumbent upon large institutions to develop programs that encourage low-impact commute options.

Commuting resulted in approximately 12,000 MTeCO2, or 11% of campus emissions, in 2008. PSU is a growing campus that is accessed by individuals from around the region; therefore, commuting to PSU by students and employees will be a source of GHG emissions for many years to come. One priority of the PSU Framework Plan (FP) is to increase connectivity to the University – primarily by promoting and strengthening alternative options to vehicular travel. Additionally, a goal of the FP is for PSU to house 25% of students on campus, thus increasing the percentage of students who walk and bike to campus.

PSU's control over commuting behavior is limited due to the ubiquity of roadways throughout the region and the widespread availability of parking facilities close to campus that are not owned by PSU. However, in recent years, the University has demonstrated success in influencing commuting behavior. PSU's efforts to decrease the percentage of students and employees who drive to campus, and the distance that they travel, coupled with increasing vehicle efficiency, will result in a drop in GHG emissions even if the absolute number of vehicles arriving on campus remains constant.

Already, PSU and the City of Portland (CoP) fund a variety of projects and programs aimed at decreasing single occupancy vehicle travel, mostly through the use of parking revenue. PSU actively pursues financial and political support for multiple modes of transportation to access the district. Continued planning efforts will enhance the social and physical infrastructure necessary to increase access to campus via modes of transportation other than driving alone. Decreasing the prevalence of drive alone trips to campus is essential for achieving aggressive carbon reduction goals.

Between 1999 and 2009, the percentage of PSU employees **driving alone to campus dropped from 47% to 26%**. During that same period, the percentage of PSU students driving alone to campus dropped from **41% to 25%**.

Commuting patterns changed significantly between 1999 and 2009. In 1999, 47% of employees and 41% of students drove alone to campus, while these rates were 26% for employees in 2008 and 25% for students in 2009. At the same time, the percentage of students and employees who bicycled to campus increased dramatically. Only 5% of employees and 2% of students biked to campus in 1999, while these rates were 10% for employees in 2008 and 11% for students in 2009. These changes in commuting behavior have demonstrated that the campus community is capable of significant mode split changes in a short amount of time. In order for PSU to achieve its carbon reduction goals, it has established mode split targets for 2015 and 2030.

It should be noted that the strategies and actions identified in the CAP will provide benefits beyond the reduction of emissions. For one thing, the University will be able to forgo the construction of additional

CAP = Climate Action Plan
CSO = Campus Sustainability Office
TAPS = Transportation and Parking Services
BPS = Bureau of Planning and Sustainability
FADM = Finance and Administration
AUXS = Auxiliary Services
CoP = City of Portland
FP = PSU Framework Plan

parking structures, and associated capital expenses. University students and employees will also benefit. Low-emission transportation modes are more affordable than vehicle ownership and often provide physical and mental health advantages.

Although a number of actions will be completed by PSU Transportation and Parking Services (TAPS), implementation of the CAP will require a high degree of cooperation among PSU departments, advocacy groups, and local government agencies. Within PSU, an emissions mitigation team composed of staff members in Auxiliary Services (AUXS) will take primary responsibility for managing the implementation of actions, communicating with PSU departments, and coordinating with external organizations regarding commuting related emissions.

PSU Faculty & Staff Mode Split History

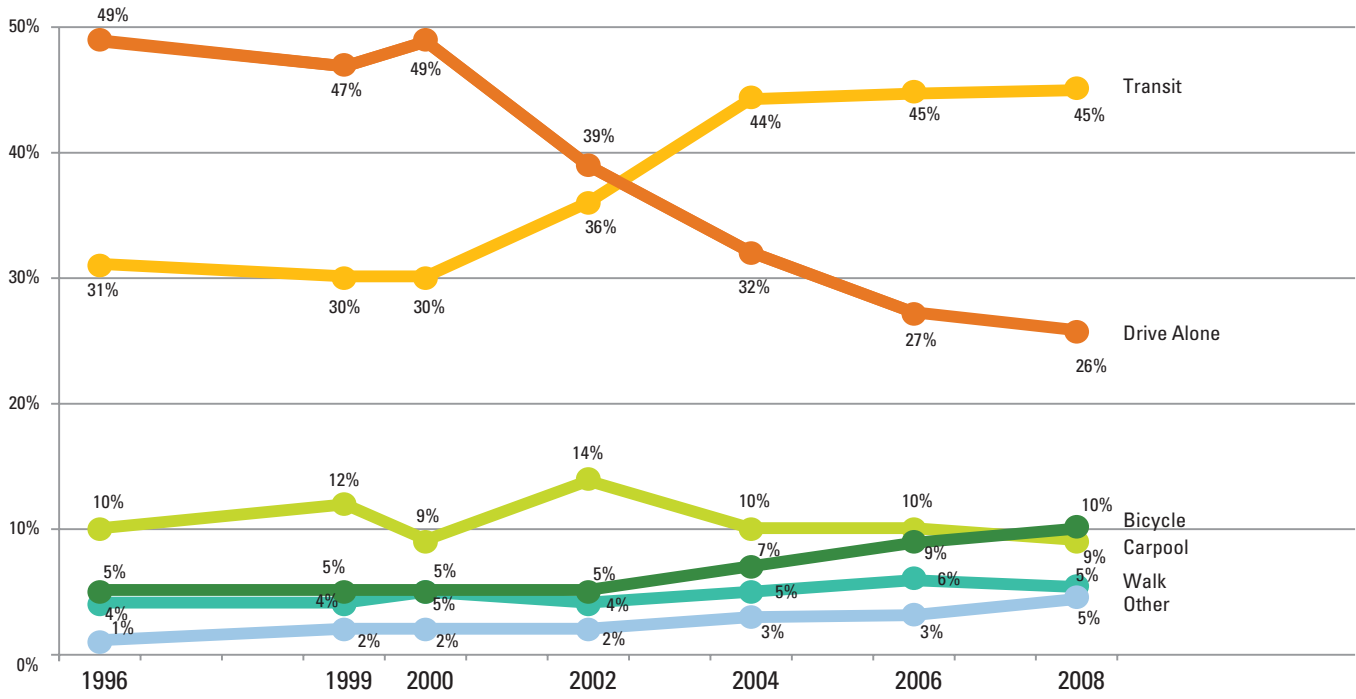

PSU Staff Mode Split 2008

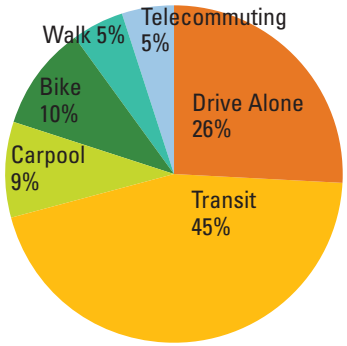

PSU Staff Mode Split 2030

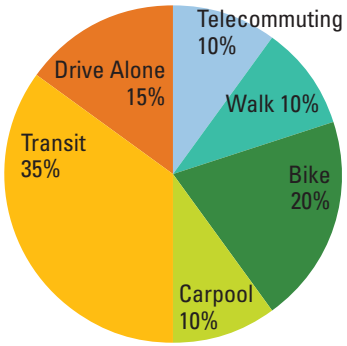

Ongoing Efforts

PSU has already undertaken actions that support the targets in this section. These practices must be continued in order to reach the goal of climate neutrality by 2040.

Ongoing Activity/Program	*Lead Office*	*Program/Activity Age (years)*	*Target*
Maximize parking fees using market-based strategies (i.e. variable-based pricing)	TAPS	5	# 1
Provide prime parking spaces to individuals who carpool or vanpool at reduced rates	TAPS	10+	# 1
Partner with a car-sharing service to accommodate the occasional need to use a car for personal and business trips during the day	TAPS	7	# 1
Provide subsidized transit passes to students and staff members	TAPS	10+	#1
Provide on-campus bicycle repair & maintenance services	TAPS	5	
Lead workshops such as "Bike Commuting for Women" and "Bike Commuting during Winter Conditions"	TAPS	3	# 1
Host community-building programs such as Breakfast for Bikers and Community Coffee Rides.	TAPS	2	# 1
Participate in promotional events sponsored by community organizations, including the Bike Commute Challenge sponsored by the Bicycle Transportation Alliance (BTA)	TAPS	4	# 1
Partner with the City and TriMet in improving transportation infrastructure on and around campus, including bike parking, transit facilities, and intersection crossings and crosswalks (i.e. curb extensions)	TAPS	4	# 1
Advocate for demonstration projects in and around campus including the designation of "Green Streets" by the City of Portland, and "active transportations corridors" by METRO	TAPS	2	# 1

2030 Target #1

Reduce the mode share of drive alone trips to 15% of commute trips made to the PSU campus.

The transportation mode that creates the largest amount of emissions per passenger per mile is single occupancy vehicle travel, or driving alone. It is crucial that the University disincentivize driving alone while facilitating and incentivizing other options in addition to biking and walking.

One-Year Actions

- Develop a bike parking plan that formalizes the annual evaluation of parking demand and corresponding installation of new bike racks.
- Develop university policy formally requiring that PSU's strategies to reduce carbon emissions through commuting be considered during the planning of all capital improvements and infrastructure investments. New and renovated structures should provide secure indoor and convenient outdoor bicycle parking. Where the construction process inhibits bicycle and pedestrian connectivity mitigation plans should be implemented.
- Develop a bicycle theft prevention strategy.

- Develop an outreach plan to increase knowledge about transportation options, potentially including:
  - Promotion of carpool networking programs.
  - The distribution of campus bicycle maps highlighting the locations of large bike parking installments, covered/secure parking, services such as showers and lockers and the PSU Bike Hub.
  - Targeted transportation options marketing, resources, and education in a manner similar to the City's SmartTrips program.
  - Installation of sustainable transportation kiosks providing information and services (e.g. bike pumps, transit schedules, maps, postings about on-campus resources or events, etc.).
- Partner with the City to facilitate the implementation of the newly adopted Bicycle Master Plan.

Three-Year Actions

- Increase the number of bike parking spaces in covered areas, and secure areas.
- Explore additional funding sources to increase the subsidization of transit passes for students and staff members, potentially providing a free "Universal Pass" program to students.
- Explore additional funding sources to support improvements in transportation infrastructure in the University District.
- Partner with the City to enhance bike and pedestrian connections over the I-405 corridor.

2030 Target #2

Reduce the per capita number and distance of commute trips to the PSU campus.

It may be possible to eliminate some trips taken to the PSU campus entirely. For trips that continue to be taken to PSU, proximity to campus would enable students and staff members to make low emission transportation choices, and reduce the overall impact of high emission transportation modes.

One-Year Actions

- Develop a University policy formally supporting the private development of housing and commercial uses near campus.
- Work with New Student Programs to develop an information campaign for newly admitted students, encouraging them to consider transportation when making their housing choice.
- Work with University Housing and FAP to build more student housing and amenities for students on campus.

Three-Year Actions

- Work with the Career Center to develop an information campaign for job-seeking students, encouraging them to consider transportation when looking for employment.
- Work with Human Resources to develop a system to track telecommuting and condensed work schedules used by staff members.
- Work with PSU Extended Campus Program to increase the capacity for and promotion of distance learning and online courses.

2030 Target #3

Lower the carbon impact of vehicles used in the commute to campus.

The students and staff members of PSU comprise a very diverse group of commuters. Due to a variety of factors, both personal and professional, it is likely that some people will continue to see a need to commute by car into the foreseeable future. When this need cannot be eliminated, the emissions created by this transportation mode can still be reduced.

One-Year Actions

- Work with PGE and the City of Portland to increase the number of charging stations on and around campus for visitors.
- Develop a campaign encourage commuters who drive to use another transportation mode for a por-

tion of the trip to campus. For example, encourage commuters to "Park and Ride," "Park and Bike," or park farther from campus, walking the last portion of the commute.

Three-Year Actions

- Develop a system to track the use of low carbon vehicles for commuting purposes, in order to recognize participants and monitor university progress.
- Install real-time informational signage that tells drivers where parking is available reducing the need to circle in search of parking.
- Provide prime parking spaces to individuals who use of low emission vehicles for commuting.

Long-Term Actions

There are currently no Long-Term Actions for this section.





2030 Targets & Actions: Research & Education

Portland State University's (PSU) investments in academic sustainability and climate change activities focus on enhancing the student experience, building on the success of faculty contributions to teaching and research, and deepening the University's engagement with the larger Portland community. These investments are starting to pay dividends as the University is becoming nationally and internationally recognized for its research and curriculum on climate issues and engagement.

Maintaining a focus on climate research and curriculum at PSU will be necessary to achieve the dramatic reductions in carbon emissions outlined in the CAP. To grow that capacity, the Plan outlines a series of actions to increase the University's ability to study the campus itself, and also to increase global visibility and interest around climate research and curriculum at PSU.

PSU has a history of collaborating with the Portland community on civic ecology projects. More recently, PSU has taken on projects with community partners that deal directly with climate issues. The University's role in this work became more focused in 2006, when PSU established the Center for Sustainable Processes and Practices (the Center) to better coordinate faculty members' sustainability efforts and programs across various schools and colleges.

On September 10, 2008 PSU announced that it had received a generous ten-year, $25M challenge grant from the James F. and Marion L. Miller Foundation, which would support activities and initiatives that promote sustainability at PSU and within the broader community. In April 2010, Robert Costanza – a national leader in multi-disciplinary research, which connects ecology, economics, and sustainability – accepted a position as the Director for the Center.

The Center's efforts to increase collaboration within the University around sustainability, and also to grow PSU's global status, is supported by the Campus Sustainability Office's (CSO) efforts to link climate projects in the operations of the University to research and curriculum. Facilities and Planning (FAP) and Auxiliary Services (AUXS) will also play a vital role in supporting curricular efforts and framing the research agenda around emissions reduction solutions.



CAP=Climate Action Plan
CSO=Campus Sustainability Office
The Center=The Center for Sustainable Processes and Practices
AUXS=Auxiliary Services
FAP=Facilities and Planning
SLC=Student Leadership Center

Ongoing Efforts

Miller grant funds have already helped catalyze campus-wide momentum towards addressing climate issues. Additionally, CSO, AUXS and FAP have begun to take meaningful steps forwards in support of this collaborative effort. These practices must be continued in order to reach the goal of climate neutrality by 2040. Below is a list of these activities or programs:

Ongoing Activity/Program	*Lead Office*	*Program/Activity Age (years)*	*Target*
Graduate and undergraduate fellowships	The Center	2	All
Research and curriculum grants for sustainability	The Center	2	All
Integration of select classes and research projects with University operations	CSO	7	#2
Facilitation of applied student projects on campus	SLC, CSO	5	#2
Communication about sustainable practices on campus	The Center, CSO	2	All
Faculty and student travel grants	The Center	1	All
Domestic and international internships in sustainability	The Center	2	#1



2030 Targets & Actions: Research & Education



2030 Target #1

Become a global leader in climate research and curriculum.

PSU is starting to make a name for itself on the global stage with regard to sustainability and climate research and curriculum. Rather than dispersing energy and resources across many areas, the University has recently begun to develop "nodes of excellence."

One-Year Actions

- Develop a communication and outreach program for PSU's climate-related research initiatives.
- Bring two global leaders to PSU for general lectures and high level meet-and-greets with faculty, staff, and students.
- Create a list of the top ten universities working on urban climate issues.

Three-Year Actions

- Develop and pilot energy/climate literacy learning objectives in select undergraduate courses.
- Expand fellowship/internship programs to include a specific section that focuses on climate issues.
- Host an international conference on urban climate solutions.
- Develop a student exchange program where a PSU student goes to another urban university (and a student from that university comes to Portland) to learn about climate issues as they relate to that specific place.
- Develop a program for K-12 schools in the region to learn, teach, and work on the PSU campus with a specific focus on climate issues.

2030 Target #2

Develop an administrative structure that actively integrates PSU academics with operations around climate mitigation projects.

Academic and operations offices at PSU traditionally have very little interaction. In the past, interaction has been limited and not sustained but that trend has begun to change. Developing higher levels of interaction – and sustained collaboration – between the academic side and operations side of the University will provide students and faculty with more opportunities to work on meaningful campus projects.

One-Year Actions

- Develop an online portal to share and display PSU's climate data and progress on climate goals in relation to other universities.
- Build on the PSU student research project entitled "Market and Competitive Analysis of Sustainability" to develop new strategies for integrating academics

with operations. *(Research Project)*

- Hold a visioning summit where PSU faculty, staff, and students co-develop a vision and long-term goals for reaching a sustainable and desirable campus.
- Host meetings with FAP, AUXS, and other operations departments, as well as academic departments of the University, to discuss the barriers and opportunities for increasing collaboration between the two sides of the University.
- Develop a program wherein CSO works with 2 undergraduate classes (per quarter) on a class-long CAP project or workshop.
- Develop a program wherein the CSO staff works with 2 graduate or undergraduate classes (per year) on a term-long CAP project.

Three-Year Actions

- Develop a strategic plan, including protocol, for bridging gaps between academics and operations
- Hire a new staff member, or reassign a current one, to focus on campus operations (energy management, for example) and projects with classes.





Long-Term Actions

2030 Action #1

- Develop three strategic partnerships with other urban universities around the world on climate-related research and curriculum initiatives.
- Adopt energy/climate learning objective(s) for PSU curriculum.

2030 Action #2

- Create a structure for the Deans and the heads of PSU operations to meet and discuss climate projects.



2030 Targets & Actions: EcoDistrict Development

The University is planning to expand its campus in the coming years and has committed to doing so with minimal environmental impact. Meeting the targets set out in Climate Action Plan (CAP) will require collaboration and increased engagement with surrounding property owners, residents, workers, businesses owners, and community partners. From this perspective, the CAP serves the secondary purpose of driving climate and sustainability efforts in the south downtown area.

The University has already taken steps to expand the scope of its sustainability initiatives beyond what can be accomplished on its own. The proposed Oregon Sustainability Center, which will be located adjacent to PSU's campus, involves the City of Portland (CoP), the Oregon University System (OUS), the Portland Development Commission (PDC), private sector partners, and non-profits. The Montgomery Green Street bike parking garage was partially funded by Metro, and the Harrison Street bike parking room is being developed with funding from TriMet. These projects represent some of the collaboration around sustainability planning and projects that already take place between PSU and other public entities. A key element of EcoDistrict development is to expand this collaboration to include adjacent private property owners in these efforts. The actions outlined in this section support the current nodes for partnership building and collaboration, and recommend a structure for expanding the scope and impacts of these projects.

The EcoDistricts Initiative – currently spearheaded by the Portland Sustainability Institute – provides a framework for coordinating sustainability efforts between PSU and neighboring property owners. An EcoDistrict is defined as:

> *"A neighborhood or district with a broad commitment to accelerate neighborhood-scale sustainability. EcoDistrict members commit to achieving ambitious natural resource performance goals, guiding district investments and community action, and tracking the results over time."*[37]

Given the strong emphasis on carbon reduction, the University's leadership role in the EcoDistricts Initiative will be a valuable mechanism for supporting the targets in the CAP.

Beyond carbon reduction, the formation of an EcoDistrict will provide other benefits to PSU and its neighbors. For example, EcoDistrict development will require increased information flow and accountability among PSU, surrounding property owners, residents, business owners, and workers; this could yield economic and social opportunities that were previously hidden. Additionally, the EcoDistrict development process will increase transparency between PSU facilities and the facilities managers in the surrounding properties, and also enhance understanding of behaviors and opinions of the workers, owners, residents, and business owners in the district area.

PSU Finance and Administration (FADM) already has relationships with many University District property owners, as well as strong ties with CoP and TriMet. As

CSO = Campus Sustainability Office
CAP = Climate Action Plan
Metro = Portland Metropolitan Regional Government
PoSI = Portland Sustainability Institute
PDNA = Portland Downtown Neighborhood Association
BPS = Bureau of Planning and Sustainability
FADM = PSU Finance and Administration
AUXS = Auxiliary Services
OUS = Oregon University System
PDC = Portland Development Commission
CoP = City of Portland
PBOT = Portland Bureau of Transportation

a result, FADM will be a central driver for many of the collaborative efforts in the area. Additionally, AUXS and FAP staff frequently work with local and regional public agencies, the Portland Downtown Neighborhood Association (PDNA), and commercial and retail tenants in the University District. CSO, AUXS, and academic researchers will take a leading role in much of the outreach to residents and small property owners, as well as outreach to organizations that do not already have relationships with FADM.

Ongoing Efforts

PSU has already undertaken actions that support the targets in this section. These practices must be continued to reach the goal of climate neutrality by 2040. Below is a list of these activities or programs:

Ongoing Activity/Program	*Lead Office*	*Program/Activity Age (years)*	*Target*
Outreach to major surrounding property owners	FADM	1	All
Collaboration with Metro, TriMet, Portland Streetcar, and PBOT	AUXS	10+	#2
Communication and engagement with the PDNA	AUXS	8	All
Communication and engagement with TriMet, BPS, and Metro about PSU's climate planning process	CSO	1	All
Outreach and engagement of residents and small business owners about climate planning at PSU	Miller Research	1	#1
Communication and engagement with the city and PDC	FADM	10+	#1
Tracking and coordination with PoSI around EcoDistrict concept development, financing and policies	CSO	1	All

2030 Target #1

Develop a governance structure for the University EcoDistrict that is supported and acknowledged by CoP policies and includes broad representation of stakeholders in the University area.

Actions on climate and environmental issues are often limited by ownership boundaries. Establishing a meaningful boundary for co-developing environmental and climate goals and projects across ownership boundaries may expand the area's capacity to increase environmental health and resident well-being while simultaneously reducing costs. PSU will be a central supporter of University EcoDistrict development; however, without mutual ownership across stakeholders, the initiative will not be sustained.

One-Year Actions

- Conduct preliminary outreach to surrounding property owners, residents, workers, and businesses

about the EcoDistrict concept.

- Work with the PDNA and other downtown area networks to increase awareness of PSU's current environmental performance statistics, as well as current planning efforts (PSU's Framework Plan and CAP, for example).
- Identify additional partners in the Portland Metro region who are undertaking environmental and climate planning efforts and whose perspectives and work would be useful for the EcoDistrict goal-setting process.
- Develop an advisory group that includes, but is not limited to, Multnomah County, BPS, PDC, and the Portland Metropolitan Regional Government (Metro) to coordinate and integrate University EcoDistrict environmental and climate planning with regional efforts.
- Form an initial EcoDistrict working group, or working groups, which have representation from small business owners, major property owners, residents, and workers.

Three-Year Actions

- The EcoDistrict working group, or working groups develop policy recommendations for the University EcoDistrict to adopt internally and also for CoP to consider.
- Work with the PDNA and BPS to host a downtown EcoDistrict planning summit.
- Establish a direct communication and information-sharing channel among the pilot EcoDistricts in other parts of the city.
- Develop a strategic plan for governance development, project implementation, and outreach for the University EcoDistrict.

2030 Target #2

The University area EcoDistrict exceeds the goals set out in local and regional climate and environmental plans (CoP, Metro, Multnomah County).

The theory behind an EcoDistrict is that it will not just meet, but will greatly exceed, local and regional environmental and climate goals. In order to ensure that the initiative is making meaningful progress towards these goals, direct coordination regarding performance measurement methodologies with local and regional entities will occur regularly.

One-Year Actions

- Generate high level analysis of EcoDistrict projects that assess the number of property owners involved, as well as evaluating the costs, barriers, and environmental and carbon reduction impacts. *(Research Project)*.
- Build an online database that displays the environmental and climate performance of the University EcoDistrict.
- Develop baseline population data on surrounding property owners, residents, workers, and businesses and compile an inventory of EcoDistrict projects or activities that are currently taking place.

Three-Year Actions

- Based on the high-level project analysis performed in year one, implement three EcoDistrict projects that involve more than three property owners in the University EcoDistrict.
- Identify key projects from regional environmental and climate plans that can be tested within the University EcoDistrict.

Long-Term Actions

2030 Action #1

Establish a district governance structure that has the capacity to tax itself.

2030 Action #2

Implement an energy project that reaches across five property owners.



Conclusion

PSU's annual greenhouse gas emissions are the collective result of millions of choices by students, staff, and faculty members. We are already making positive climate choices every day that add up to big changes on an annual basis. The PSU 2010 Climate Action Plan highlights existing programs that make positive choices easy, and identifies areas where departments can help PSU community members improve their choices.

The process of moving a large institution towards such a major goal as carbon neutrality is not easy. This Plan outlines the initial steps necessary for building a foundation for this change by identifying barriers to emissions reduction, and suggesting solutions. In addition, the CAP defines ownership and a responsibility for moving actions and activities forward, prescribes work plans to improve data collection systems to measure future progress and efforts, and identifies strategies for centralizing institutional information about emissions in order to raise awareness and facilitate change.

Some efforts will be possible using the current distribution of resources at the University, while others may require additional resources and budget allocation within individual departments. Alliances across institutional boundaries are proposed within the Plan as a means for solving operational challenges. Additionally, partnerships with private industry, public agencies, and the community will be vital to reaching the goal of carbon neutrality by 2040.

Achieving a sustainable campus has no fixed endpoint – it will require a continual process of reinvention. This is an ethic that directly aligns with PSU's development of a "living laboratory" for new sustainable processes and practices. Without a keen and humble understanding of the full (and not yet completely understood) scope of climate impacting activities, efforts to achieve a sustainable campus will continue to be limited and internally flawed. This Plan is a best effort by the planning team, working groups, and students to assess the on-the-ground realities at PSU and establish immediate actions to advance the University's climate stewardship.

References

1. EPA Greenhouse Gas Equivalencies Calculator: http://www.epa.gov/rdee/energy-resources/calculator.html
2. http://www.ghgprotocol.org/standards/corporate-standard
3. http://www.oregon.gov/ENERGY/GBLWRM/docs/OUS_GHG_Inventory.pdf
4. http://www.leg.state.or.us/07reg/measpdf/hb3500.dir/hb3543.en.pdf
5. PSU's GHG inventory uses a similar emissions tracking methodology as Metro's Regional Inventory.
6. http://www.pdxinstitute.org/index.php/whatwedo/ecodistricts
7. An exampled of this work is a project between CSO, Facilities & Planning and Auxiliary Services that aims to better meter and track Scope 1 and 2 emissions.
8. "Carbon neutrality" is different from "net zero" emissions in that carbon neutrality can be achieved using carbon offsets.
9. A combined heat and power engine generates electricity by burning natural gas, and then captures the waste heat from the electricity generation process, and uses the heat for steam or hot water heating.
10. Oregon State University's Climate Action Plan provided some of the content for this section.
11. A full definition of the EcoDistrict concept can be found in the "EcoDistrict Development" section of the plan and in the "Key Terminology" section.
12. 2010 PSU Framework Plan
13. Efficiency measures, fuel switching and "onsite" offsets actions will occur simultaneously. Only once those options have been exhausted will the University investigate the possibility of purchasing off-site offsets.
14. Executive Order 06-02 requires all new state buildings and major renovations to meet the US Green Building Council's Leadership in Energy and Environmental Design (LEED) program's "Silver" standards (Office of the Governor, 2006).
15. http://oregonsustainabilitycenter.org/
16. The building is currently fundraising for a capital gap.
17. The Broadway energy competition was organized by CSO staff, where different floors in the Broadway housing building compete against each other to achieve energy reductions.
18. CSO completed a night audit of a select building on campus to gather data about after hour energy use on campus.
19. These buildings must also be expected to remain in use for 6+ years.

20. Oregon Revised Statute (ORS) 276.900, State Energy Efficient Design (SEED), stipulates that State of Oregon facilities constructed or purchased by authorized state agencies must be designed, constructed, renovated and operated so as to minimize the use of nonrenewable energy resources and to serve as models of energy efficiency (State, 2010). In addition, the 2007 Oregon Legislature passed HB 2620 which requires that public entities spend 1.5% of the total contract price of a public improvement contract for new construction or major renovation of a public building on solar energy technology (State, 2010).
21. Light harvesting is a process where additional natural light is brought into buildings through skylights, light tunnels, etc.
22. The wind resources on campus are insufficient for existing urban wind technology.
23. Anaerobic digesters use microorganisms to quickly breakdown biodegradable substances. One of the byproducts is methane, which can be burned as a renewable resource to run boilers and combined heat and power systems.
24. PSU has central boilers and chillers that provide heating and cooling for a portion of campus buildings.
25. The practice of regularly checking to see that building HVAC systems are running efficiently can save up to 20% on energy use with payback times under three years. For detailed information, visit the Continuous Commissioning Guidebook for Federal Energy Managers: (http://www1.eere.energy.gov/femp/operations_maintenance/om_ccguide.htm)
26. http://www.cbs.state.or.us/external/bcd/committees/11reachcode.html
27. http://www.portlandonline.com/bps/index.cfm?a=206573&c=48212
28. http://www.architecture2030.org/
29. This refers to the production, disposal and movement of materials, goods and foods related to PSU.
30. Waste generation on campus = waste disposed + waste recovered. Another way to understand the term is as a rough estimate for all items purchased minus (-) food and plus (+) yard debris.
31. Based on current estimates, approximately 70% of PSU waste goes to the landfill.
32. At the moment, PSU only has the capacity to give a detailed embodied emissions number for paper purchases.
33. Copy paper is one commodity that can already be tracked for embodied emissions.
34. The CSO developed a copy paper report for FY 2008 that outlines a series of recommendations for paper conservation and purchasing recycled content. Find a copy of the report here: http://www.pdx.edu/sustainability/reports
35. This includes study aboard.
36. This plan does not encourage a reduction in travel that is necessary for building the careers and reputations of faculty and students. However, when there are viable options for reducing travel that does not limit the above factors, then this plan lobbies for that choice.
37. http://www.pdxinstitute.org/index.php/whatwedo/ecodistricts

Appendix A: Research Projects

Throughout the Climate Action Plan nineteen research questions are identified to help reduce carbon on campus. Due to staff capacity limitations, these research projects will only be completed with help from students and faculty. The Campus Sustainability Office (CSO) has described basic needs and structure for these projects; however, there is ample opportunity to refine and customize each project to fit the interests and time constraints of researchers.

As a part of the Outreach and Education Plan (OEP) for the CAP, the CSO will be marketing the overall content of the Plan itself and sharing research opportunities with faculty and students. We hope that the rough descriptions provided below will stimulate interest from students and faculty who read the Plan and inspire them to contact CSO staff to ensure that the project has not already been taken. If the project is still available, the student or faculty member will work with CSO staff to craft a detailed scope and work plan that aligns with current efforts.

The projects are broken into the Plan's six categories and then categorized by either "Case study research" or "Campus-based research." "Case study research" projects will generally be less time-intensive than the "Campus-based research, which will likely require ongoing work with a CSO member or a contact at the University. These delineations do not always hold true, and in many cases the "Case study research" projects could be expanded into a "Campus-based research" project if the faculty member(s) or student(s) have the time and interest to take on the additional work required.

Buildings (Case study research)

1. Research funding mechanisms used by other universities and institutions that have installed large wind turbines (Appalachian State University, University of Vermont, University of Minnesota, etc.).

This project will look at other the successes and lessons learned from universities who have invested in large wind. Search the AASHE Digest (www.aashe.org) for wind turbine installation projects. Is there something PSU can learn from how these projects were funded? Are other public entities in the Portland area considering installing turbines? What kind of capacity would be needed to generate 80% of building-related energy from renewable energy by 2030?

2. Analyze the potential to integrate light harvesting into new building plans, as well as retrofits in existing buildings.

Light harvesting is known for positive health benefits and reduced lighting costs. This project will investigate the costs of this technology and some of the possible downsides (additional cooling loads in the summer, structural problems, etc.). Identify opportunities to enhance light harvesting in mid-century buildings such as Neuberger Hall and the Education/Business Administration Building.

3. *Research other public entities that have implemented workforce training programs in clean technologies.*

The demand for workers in clean-tech fields is increasing each year. This project will identify best-practices in adding workforce training component to RFP language for major renewable energy/weatherizing projects. It will also identify workforce training programs for clean technologies, building retrocommissioning work, potential financing mechanisms, long-term economic benefits for the state and country, and barriers to implementation.

Buildings (Campus-based research)

1. Determine the feasibility and impact of PSU participating in the City of Portland's High Performance Building program.

Participating in the City of Portland's High Performance Building program may be a great opportunity to build stronger ties with the Bureau of Planning and Sustainability, while also providing the University with a more progressive standard for building develop-

ment. This project will look at the immediate costs and benefits of the program, such as incremental budgetary increases for new buildings benchmarked against current standards, utility savings, and changes to health and well being. There will also be a strong focus on the long-term benefits of the program, such as a decrease in risk towards climate change and a hedge against future electricity and gas spikes. For more information go to: (http://www.portlandonline.com/bps/index.cfm?c=45879&)

2. Based on research by engineering faculty, suggest an alternate location or use for $50,000 earmarked for an urban wind energy system by the Chancellor's office.

Urban wind is currently not deemed to be viable for cost effective energy generation on campus. The project will evaluate other renewable or clean technologies that would be good candidates for a technology demonstration project on campus.

3. Conduct surveys and targeted interviews with students, faculty, and staff to identify ideal locations on campus for renewable energy installations based on visual impact, instructional value, and technical feasibility.

Renewable energy systems provide clean energy, but also provide pedagogical and behavioral change value. This project will create a decision-making matrix for siting renewable energy technologies on campus by evaluating the possible limitations as well as the benefits associated with the installation sites.

4. Perform an analysis of the impacts of using biomass in PSU district energy system.

PSU's district energy system already provides much lower carbon heating and cooling than most single building systems on campus, but still has a large carbon load. This project will look at the existing district energy system at PSU and evaluate the feasibility of switching to biomass for some of the fuel source.

5. Develop a high level scan of available smart grid technologies and their potential use at PSU.

The smart grid technology world is vast. These technologies could serve to support many of the demand management goals in the CAP. This project will start with a large scan of the different smart grid technologies in the sector, and then the group will narrow this list by completing an evaluation of the needs and possible application of the smart grid at PSU. Finally, the group will take the list of applicable technologies and perform cost benefits analysis to develop a short list of technologies that PSU might want to invest in.

6. Work with the Space Committee to develop new models for space allocation that help achieve CAP goals.

Strategies related to space management, building programming during major renovations, and scheduling can be used to support higher densities and lower the carbon loads of buildings (per FTE). This project will be done in coordination with the Space Committee, as the project team presents the goals of the CAP to the group and then works to collaborate on existing projects or develop new ones that help support CAP goals.

Materials (Case study research)

1. Explore the feasibility of creating a waste-sorting program.

Studying the breakdown of a waste stream is an effective way to get a detailed understanding of the waste generation and diversion rates on campus. This project will look at best practices by other universities and identify opportunities for improving data collection and raising awareness about PSU's waste stream to reach the City's 75% waste diversion mandate.

Materials (Campus-based research)

1. Complete a feasibility analysis and timeline for composting all waste from catering and dining facilities on campus and switching to durable service-ware.

Appendix A: Research Projects

The City of Portland has recently introduced composting to residents and already makes the service available to businesses. This project will look at opportunities to improve compost capture rates, reduce contamination, and develop a timeline for establishing the capacity for composting 100% of the pre- and post-consumer organics at PSU.

2. Explore options that can be included in a new dining service RFP with zero waste goals – adopting those of Victor's at Ondine.

Victor's at Ondine is already a near zero-waste dining hall. Working with Auxiliary Services, this project will build off of the Ondine example (making additions where necessary) to craft guidelines for the next dining service RFP that sets out the steps for converting all PSU dining to zero waste facilities.

3. Write a food action plan that evaluates current food purchasing policies and performance at the University, develops steps to align with the Multnomah Food Initiative, and increases the amount of low carbon food consumed on campus.

Portland is a national leader in low carbon and local food policies and initiatives. This project will develop recommendations for aligning PSU with those efforts, as well as a series of next steps for purchasing low carbon produce at PSU.

4. Evaluate opportunities to increase low carbon food purchasing by Food for Thought Café and the dining services contractor.

Food is a major area of embodied emissions for the University. Food for Thought Café is a great place to pilot, and better understand the potential benefits and barriers to increasing the percentage of low carbon food being purchased. This project will work with the service contractor and Food for Thought Café to gather baseline data about food currently being purchased, testing the feasibility of piloting a low carbon food program.

Travel (Case study research)

1. Research best practices and lessons learned from other institutions to develop a methodology for collecting, administering, and assessing progress of a voluntary carbon offset program.

Reaching carbon neutrality in the travel category does not mean that the University will stop traveling. This project will investigate different offset programs in the US and the world, specifically focusing on the programs that reinvest the offset money into local carbon-reduction projects. The project will report on the best practices for starting, developing and maintaining one of these programs.

Travel (Campus-based research)

1. Identify departments with the highest travel expenditures and conduct interviews with faculty and staff to gain a better understanding of departmental travel patterns and options for trip reduction or switching to less carbon-intensive means of transportation.

Before taking action on an education campaign or materials to support low-carbon travel, the baseline conditions for travel at PSU must be better understood. This project will generate a report on the departments with the highest travel expenditures that outlines barriers and opportunities for reducing the carbon intensity for travel in these departments.

2. Forecast 10-, 20-, and 30-year projections for PSU travel rates.

Understanding different potential trends for future University travel will be important for setting carbon reduction goals and strategies for the travel section. This project will generate a series of factors that impact future travel trends and based on these factors develop high medium and low carbon emissions for 10-, 20- and 30- years out.

3. Develop a tool that allows PSU managers to understand trade-offs among travel costs, time expenditure, and mode of travel when approving employee travel requests.

When determining the best form of travel for employees, managers need to be given a tool that processes the different options into a single decision. The project will look at a variety of travel patterns for PSU faculty, staff and students and then make an analysis tool that allows managers to receive costs and benefits of different travel options after they input a series of variables (distance of travel, amount of flexible time in the trip, location, etc.).

Commuting

No research projects in this section.

Research and Education

No research projects in this section.

EcoDistrict Development (Campus-based research)

1. Generate high level analysis of EcoDistrict projects that assess the number of property owners involved, as well as evaluating the costs, barriers, and environmental and carbon reduction impacts.

If the district scale is to become a dominant paradigm in sustainable urban development, it should offer triple bottom-line gains over traditional project scales. This project will investigate a series of infrastructure as well as social projects at the district scale, looking at the relative environmental and social benefits.

Appendix B: Data Considerations

The data in this plan should be understood with the following assumptions in mind:

Buildings

College Housing Northwest operated the PSU housing buildings in 2000; neither the local utility (Northwest Natural) or College Housing Northwest have 2000 data for gas usage in those buildings. Therefore, the 2000 gas baseline is actually a proxy based off of 2006-2008 average data for those buildings.

There are rare instances when 2008 data for individual buildings were not available. If there were trend data for three or more years prior to the 2008 for those individual buildings, then aggregates were used to recreate an estimate for 2008. If there were significant inconsistencies in this historic data, then the information was not used.

- *Aggregated data for 2000 (electricity): Parking 2*
- *Aggregated data for 2008 (electricity): Engineering Building, School of Business Administration, Urban Center, University Place*
- *Aggregated data for 2000 (gas): Peter W Stott Center*

If a building was acquired after 2000, then that building, and its square footage were removed from to 2000 baseline calculations.

If a building had missing data for the 2000 or 2008 baselines, then the square feet for that building was removed from the total Energy Use Index (EUI) calculations.

- *Buildings built or acquired after 2000 (electricity and gas): Art Building and Annex, Engineering Building, Kiononia Building, Research Greenhouse, Simon Benson House, Native American Student and Community Center, Science and Education Center, University Place, Broadway Residence Hall, Stephen E. Epler Hall*
- *Data missing, 2000 and 2008 (gas): Systems Science, University Honors, Fourth Avenue, Parking 1, 2, 3*
- *Data missing, 2008 (gas): Montgomery Court*
- *Data missing, 2000 (electricity): Kiononia Building, West Heating Plant*

In certain instances more than one building is on the same gas/electric meter when calculating the 2000 baseline. It was not always possible to determine what meters were shared by what buildings. However, there are some buildings that did not have their own meters. If a building shared a meter with some other building, then the building's square footage were combined and included in the Energy Use Index (EUI) calculations.

The buildings on the district steam loop all feed into the same overall gas meter. Therefore, it was not possible to determine usage for individual buildings on the district loop. Instead, the total usage was spread across the aggregate square footage for buildings on the district steam loop. As a result, all of the buildings on this loop have the same number for gas use intensity.

The 2000 and 2008 baseline energy numbers do not include leased space -- only buildings owned by PSU at the end of fiscal year 2008. Total leased space is about 253,964 gross square feet.

Materials

To determine the diversion rate at PSU the following items are tracked in pounds to create the total recyclable materials leaving campus: compostable food-related organics, mixed recyclables (paper, metal, plastic), glass, yard debris, rendering oil, scrap metal, wood waste, misc. fiber, Styrofoam, rigid plastics, and construction debris. The total pounds of recyclable materials is divided by the sum of recyclables and landfill-bound trash; The final number is a percentage called the diversion rate.

There are currently no data on paper recycled by shredding services, toner cartridges, or pounds of electronics recycled.

To determined waste reduction rates, the total amount of recycling and trash leaving the campus is compared from year to year. If that total number is lower from

one year to the next, the campus is reducing its waste.

Trashco is the waste hauler for the campus. They provide the data tracked by the University in monthly bills. Since PSU is just one of Trashco's many stops on a given day and there are not scales on the trucks, the data the company provides is an estimate that is calculated based on the number and volume of receptacles and frequency of service. Exact weight information is gathered on an annual basis every week during Recyclemania (January-March).

Emissions related to sewer-related methane releases were included as «waste water»in the carbon calculations.

The amount of carbon associated with trash pick-up was not included in the carbon calculations based on the small impact of the activity. The EPA assumes an average of .01 MTeCO2 is associated with the pick-up and transfer for each ton of waste. This would equate to about 30 MTeCO2 at PSU. The Portland Metro Regional Government's greenhouse gas inventory accounts for carbon associated with transporting waste to the Arlington landfill.

Travel

The current travel data does not allow a way to discern between forms of travel such as train, carpool, rental cars at the other end of a flight, type of plane used or bus.

Commuting

Commuting data are collected using surveys administered by Auxiliary Services. The Student Transportation Survey and Employee Transportation Survey are conducted biennially, in alternate years. Responses are collected during a two-week period in May. 2008 emissions were calculated with the 2007 Student Transportation Survey and 2008 Employee Transportation Survey. Several limitations characterize the survey data:

- *For an individual commuter, only the mode used to travel the greatest distance to campus is collected for each day. The surveys do not collect information about trips from campus returning home. The surveys do not collect information about combinations of modes, or multiple trips to campus in a single day. For the purpose of calculating emissions, the single mode was used for each respondent's trip to and from campus for each day of commuting assigned to that mode.*
- *Commute distances were calculated using residential addresses maintained by PSU, which include some inaccuracies. These distances are "as the crow flies," rather than along the street network.*
- *The fuel efficiency of vehicles used to commute to campus is not collected. For the purpose of calculating emissions, national fleet averages were used.*
- *Bus and light rail trips are not separated, although each mode generates different emissions per mile. When calculating emissions, bus and light rail trips were all counted as bus trips; the MAX light rail began connecting to campus in fall 2009.*
- *The Student Transportation Survey includes a wide variety of potential mode choices. For the purpose of calculating emissions, "drove alone," motorcycle/scooter," and "was dropped off" were treated as trips using a "personal vehicle."*
- *The Employee Transportation Survey is constrained by additional limitations, in part because it is designed by TriMet:*
  - *--Only faculty and staff members in permanent positions greater than 0.5FTE are surveyed. Adjunct professors are not surveyed. Part-time, temporary, and student employees are not surveyed.*
  - *--Staff & faculty members not separable. For the purpose of calculating emissions, commuting choices were assumed to be the same for both groups, except that staff members were assumed to travel to campus five days per week instead of four.*
  - *--Streetcar trips are not identified in the survey.*

In order to calculate commuting emissions using the Clean Air -Cool Planet Campus Carbon Calculator, data must be submitted for three different groups: students, faculty, and staff. The calculator is designed to accept the percentages of each group whose primary

mode equates to "personal vehicle," "carpool," "bus," and "light rail." However, because PSU students, faculty, and staff use a variety of transportation modes during a given week, Auxiliary Services calculated the percentages of each group who used the given mode at least one day during the survey period. For each group using each mode, the calculator also requires the average round-trip commutes per week and the average miles per trip. At PSU, these values reflected travel using the specified transportation mode, rather than all trips taken by a group.

The calculator generates per person per mile estimate of emissions using assumptions about the number of people sharing vehicles. For example, the calculator assumes that carpool vehicles contain 2 persons. In order to calculate total annual emissions, the calculator also requires a population total for each group, and an estimate of the number of weeks per year that each group commutes to campus.

Research and Education

No data considerations were included for this section.

EcoDistrict Development

No data considerations were included for this section.

Appendix C: Standard Operating Procedure Changes

The Climate Action Plan recommends a series of standard operating procedure (SOP) changes to help the institution systematically move toward a less carbon-intensive future. This section consolidates all recommendations and divides the SOPs into two categories: Those requiring more analytics before implementation, and those that can be implemented more readily.

The SOP changes in bold type require more specific analytics to support their implementation, such as investigating economic, political and environmental impacts, as well as structural needs for successful implementation. The CSO staff has capacity for some of these analytics, but completing the entire list of policies will require assistance from faculty and students. The SOPs not in bold are those that require only limited analytics before implementation.

These policies are not in a particular order. A prioritization schedule for these policies will begin to emerge once the analysis for costs, benefits and politics are completed for each individual policy.

Buildings

Create a standard schedule, long-term maintenance strategy, and funding mechanism for building retro-commissioning (also known as continuous commissioning) to assure that PSU buildings are operating at optimal efficiency.

Incorporate energy efficiency measures in Facilities and Planning 'Design Standards.' Apply these standards across campus, including in housing buildings (i.e. when a renovation is taking place, replace single pane windows with models that have U-values lower than .30) Review design standards for climate adaptation – given anticipated increases in summer temperatures.

Adopt an energy policy that includes:

- Energy Star standards for appliances,
- authorizing OIT to establish central power management for staff computers,
- building temperature set points,
- a list of non-essential personal appliances (space heaters, refrigerators, coffee makers, etc.).

Reinvest the money currently spent on Renewable Energy Certificates into on-site efficiency or capacity-building improvements, such as metering. Consider formalizing the duties, responsibilities, and team roles of the Energy Fund Management Team.

Develop protocols and standards for using the best HVAC technology wherever possible, including raising upper limit on datacenter temperature and cool aisle ceiling design.

Establish protocols for gathering baseline utility data from new building acquisitions.

Adopt a standard metric for analyzing new building purchases based on their current ability and future potential for increasing building utilization levels. Examples of the items this metric will evaluate are:

- the building's current density – and potential to increase density
- off-hour applications
- multipurpose uses

Materials

Establish standards and a funding mechanism for consistent indoor and outdoor recycling stations.

Create a centralized system for tracking diversion rates for new construction, major renovation, and in-house remodels.

Enforce existing dining services contractual requirements for local and organic standards or work with contractor to modify food purchasing contract requirements based on the evaluation done in year one.

Establish printing standards for campus, require all new printers to be duplex-capable, and ensure that all

existing duplex-capable printers are set to duplex by default.

Identify barriers and opportunities for eliminating bottled water from all PSU-sponsored catered events, departmental offices, and student group activities.

Create a centralized tracking system for purchases of high volume campus goods.

Travel

Through CSO administration, implement and monitor a carbon offset program for travel emissions.

Develop a centralized system for tracking faculty and staff trips that has the capacity to connect faculty/staff who plan to attend the same events so they can coordinate travel modes/costs.

Consider adding a box on travel forms where the travel applicant can acknowledge his/her carbon impact by listing miles or simply signing a statement.

Commuting

No SOP changes in this section.

Research and Education

No SOP changes in this section.

EcoDistrict Development

No SOP changes in this section.



Portland State University Office Standards



Developed by the Capital Advisory Committee and the Campus Planning Office

First Published: November, 2013

Latest Update: August, 2019

Contents

Introduction 3

Authority and Administration 3

Overview 3

Space Standards Development 3

Scope and Impact of Space Standards 4

Space Costs 4

Guiding Principles and University Mission 5

Application of Space and Furniture Standards 5

New Construction and Renovations 5

Existing Spaces 6

Roles of Departments/Committees in Applying Standards 6

Office Standards 7

Introduction 7

Office Typology 7

Allocation 9

Older Buildings and Non-Comforming Space 11

Special Circumstances 11

Office Accessory Spaces 11

Introduction 11

Office Accessory Spaces 12

Office Accessory Allocation 15

Requesting A Variance to the Standards 15

Variance Process 15

Authority and Application 15

Introduction

Authority and Administration

The space standards in this document were created to ensure that Portland State University (PSU) is using and managing space in a manner consistent with the Mission of the University. The standards will assist the PSU community in establishing and maintaining equitable, consistent, efficient and flexible office space standards. In addition, these standards will help faculty and staff make sound management decisions about space allocations both for new construction and within existing or renovated buildings.

The Campus Planning Office (CPO) administers these standards and coordinates their implementation with the office of Capital Projects and Construction (CPC). The standards are updated by CPO as necessary, in consultation with the Space Allocation Committee. The standards do not imply entitlement, although they can restrict resource expenditure.

Overview

All space at Portland State University (PSU) is owned or leased by the university and is a shared, and finite resource. Managing space efficiently reduces resource expenditures for operations and maintenance and reduces the need for capital construction. Allocating space judiciously ensures that existing space is managed efficiently and new and renovated construction is planned realistically and conservatively.

It is the intent of PSU to provide academic and administrative departments with a quality workplace environment that supports program operations, preserves the value of space, promotes environmental sustainability and reduces operation and maintenance costs.

PSU work space should support and improve the productivity of its employees/faculty and programs. Standards and practices for space planning will be used to achieve this goal.

Space Standards Development

This document was originally published in 2013 when the Standards Committee (which is currently not active) directed the Campus Planning Office to conduct background research on existing PSU standards, standards at other similar peer institutions and examine practices that support innovation in pedagogy and commitments to sustainability and fiscal responsibility. In early 2013, staff reviewed space allocation and utilization standards at the following peer urban institutions: University of Cincinnati, University of Illinois at Chicago, University of Wisconsin: Milwaukee, University of Washington: Seattle, University of Minnesota. The university systems of California State University and State University of New York policies were also investigated. Other examples were found at University of Massachusetts: Boston, Oregon Health and Science University, Oregon State University, and Stanford University.

In 2019, this document was reviewed and revised according to observed best practices at PSU and at peer institutions. The space planning and furniture standards in this document reflect existing PSU space use and tradition, along with approaches gathered from peer institutions across the nation.

The standards address office and office related spaces that are consistent with standards at other institutions. The standards presented in this document are Portland State University's approach to defining and applying space standards.

Scope and Impact of Space Standards

The standards address office and office related spaces that are consistent with standards at other institutions. The standards presented in this document are Portland State University's approach to defining and applying space standards.

Portland State University owns or occupies over 5 million gross square feet (GSF) of space in over 50 buildings. Figure 1 shows the percentage breakdown of space on campus, by category, as counted in 2019. Much of this represents specialized space such as parking, event space, health care facilities, student services, libraries, housing, and others. These types of spaces tend to have special requirements and/or industry standards that guide their design and development. For this reason, specialized spaces are not the focus of these space standards. This standards document focuses on the following types of campus space:

- Offices
- Office Accessory Space

Figure 1: Campus Space (excluding circulation), by category (2019)[1] [1]

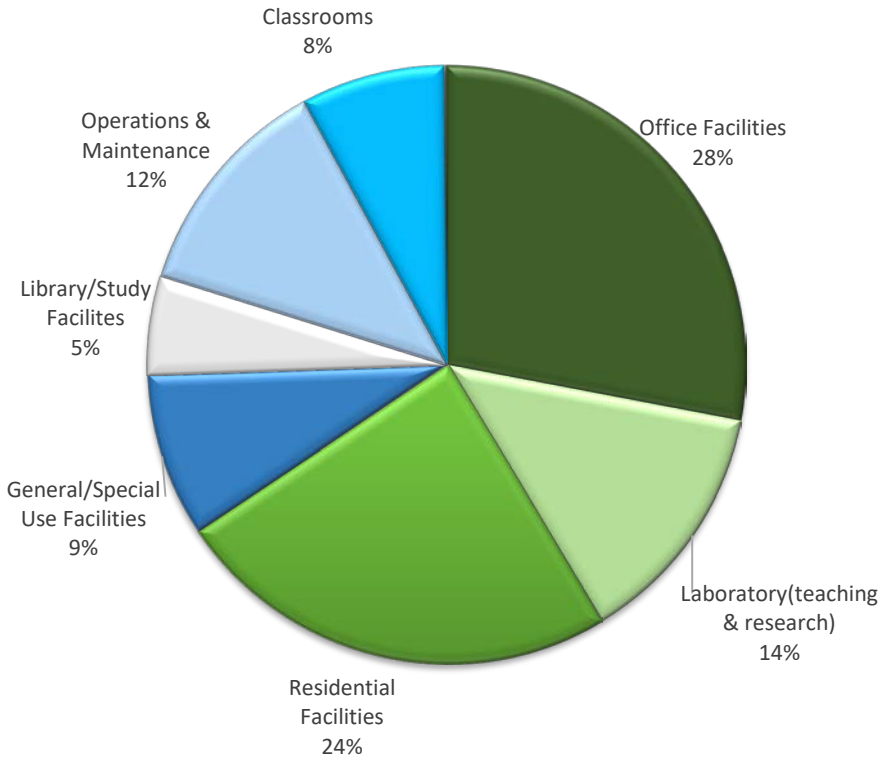

Space Costs

The costs of building, renovating, operating and maintaining space at PSU are high. An assessment of PSU's buildings conducted in 2017, determined that the value of PSU building space ranged between $110/gsf and $578/gsf, and averaged $346 gsf. Based on projects completed at PSU in 2017, Capital Projects and Construction estimate that remodeling space typically range

[1] Category definitions in appendix B

from $75/gsf to $250/gsf. These numbers represent site development, design, other soft costs and contingency.

The ongoing operating costs of buildings on the PSU campus are even more significant over time. The magnitude of these costs makes it even more important for the University to use its space wisely and efficiency.

Guiding Principles and University Mission

The standards in this document will assist the University community in meeting Space Allocation Committee's principles and Portland State's mission:

The applicable Space Allocation Committee principles include:

- Promotes the academic and research missions of the University through rigorous analysis of existing space and by creating new space that is flexible and adaptable to account for evolving pedagogy
- Improves the student, faculty and staff experience at the University through good space design
- Promotes efficient use of University space through the consistent and equitable application of University standards
- Promotes fiscal responsibility and University sustainability by considering the short and long-term costs attributed to space
- Promotes fiscal responsibility and University sustainability through the reuse of existing spaces and efficient and flexible design of new spaces.

Portland State University's Mission:

- We serve and sustain a vibrant urban region through our creativity, collective knowledge and expertise.
- We are dedicated to collaborative learning, innovative research, sustainability and community engagement.
- We educate a diverse community of lifelong learners.
- Our research and teaching have global impact.

Application of Space and Furniture Standards

The standards presented in this document, in conjunction with Furniture Standards, are intended to assist the university community in equitably, sustainably, and effectively planning for space needs. The standards are to be applied for any new construction or major renovations at any PSU building. It is important to note that the space standards are goals and that a case by case application of the standards may lead to some spaces that are slightly above or below the goals (see the following two sections).

The standards are used by the Campus Planning Office and Capital Projects & Construction when planning and designing space on campus. The standards provide the SAC a measure by which to review space allocation proposals.

New Construction and Renovations

The standards provide specific data for the planning and design of new buildings and renovation of existing spaces. They are designed to provide university departments, the Campus Planning Office, and Capital Projects & Construction a defined scale for the initial scoping, feasibility and programming phases of development. Through the various stages of planning and design, the

standards are intended to continue to serve as a reference for the size and layout of offices and office accessory components.

Variance from these standards may be justified due to unique building size and layout, budget restrictions, and other case by case factors. However, each variance should conform to the guiding principles of efficient space use, the mission of the university, and be approved by the Campus Planning Office.

Existing Spaces

Planning Space within existing buildings is often affected by structural limitations, aging building systems, building configuration, or historic preservation. There are sometimes programs that "fit" more efficiently than others in specific buildings and spaces, but the latitude, cost, justification or inclination to re-locate programs may not be feasible. Complex issues are involved in allocating and planning department spaces and meeting campus-wide space needs. When renovating existing space it may not be feasible to fully implement these standards and a variance may be required. Examples include a building with pre-existing offices that are larger than the standards established in this document or where the size of the program requires work spaces that are smaller than the goals found in these standards. The cost and energy involved in the demolition and reconstruction of these offices would not coincide with the guiding principles and the mission of the University. When allocation and/or renovation of existing space occurs, the Campus Planning Office will work with departments and Capital Projects & Construction with the goal of maximizing the efficiency, modularity, and flexibility of the space.

Roles of Departments/Committees in Applying Standards

The Campus Planning Office, under the direction of Finance and Administration, assists the PSU community with specific space planning projects and provides customer support on space planning and design related topics. The Campus Planning Office serves as staff to the SAC and maintains the inventory of space allocations, types and uses on the campus. The Campus Planning Office is available to work with departments to inventory and assess existing space usage, translate program aspirations into space needs, identify physical layouts that can improve efficiency, and present space allocation proposals to the Space Allocation Committee. The Campus Planning Office uses the standards stated in this document to determine space needs of PSU departments.

Maintaining an accurate inventory of campus space is a critical part of Finance and Administration. The space database provides important information for maximizing University resource efficiency and financial support. The data is used for determining the rate of Federal Finance and Administration Cost Recovery, internal/external reporting and analysis, master planning, facilities maintenance, logistics, and mail services. In order to maintain an accurate inventory of space, the Campus Planning Office conducts an annual space survey. Every department is designated a space coordinator who will work with the Campus Planning Office to complete the survey, to document any changes in space uses, floor plans, or occupants. It is also important for departments to contact the Campus Planning Office whenever changes are made within their spaces throughout the year.

The Space Allocation Committee, a subcommittee of the Capital Advisory Committee is charged with the efficient and effective allocation of university space.

The Campus Planning Office provides support to the Space Allocation Committee by working with departments regarding their requests for space, gathering information related to the request, performing programming and needs assessments, and preparing schematic design plans in

accordance with these standards. This information is compiled by Campus Planning Office staff as Space Allocation Proposals and is presented to the Space Allocation Committee. Responsible for making decisions on space allocation proposals, the Space Allocation Committee uses the standards stated in this document to review proposals and guide their decisions.

Variance from the standards may be justified, but need to go through a rigorous case-by-case process ensuring that variance from the standards meet the guiding principles, the mission of the university, and ultimately be approved by the Campus Planning Office.

Capital Projects & Construction, under the direction of Finance and Administration, oversees all renovation and construction projects on campus. Once space has been allocated to a department, through the Space Allocation Committee process, Capital Projects & Construction will work with departments to further develop the approved allocation plan. Capital Projects & Construction staff does not have the authority to deviate from the standards or the details of the Space Allocation Committee approval, without written approval of the Space Allocation Committee.

Office Standards

Introduction

The following standards describe the typology, size and furniture layouts for various offices and office accessory uses at Portland State University. The standards were developed with the understanding of the following considerations:

- Office design should be based on the guiding principles and individual assignment of office space should be based on the functions of employees, rather than job title.
- Preserving flexibility over time may require the application of a modular planning approach. For example, co-locating offices of similar sizes and furniture configurations can be very useful for controlling costs and addressing future needs and changes in academic and other programs.
- The placement of offices in the building core rather than along the exterior of the buildings provides efficiencies in heating and cooling, and maximizes light penetration for all building occupants, as well as compliments the flexibility noted above.
- Departments are encouraged to eliminate excess paper by sorting, purging and archiving their documents. Conversion to electronic data collection and retention should be encouraged whenever possible. This will reduce space pressures on existing offices and identify storage needs or furniture solutions to better organize office spaces and increase the utility of existing office space.
- Departments are also encouraged to review office space allocation and update office rosters regularly to make sure that current utilization continues to make sense and to make any space reallocations that might be required. Departments should contact the Campus Planning Office whenever changes are made in staff and faculty rosters and/or changes are made in the use of spaces.

Office Typology

Office space layouts that improve work space quality, increase employee productivity, increase building efficiency and decrease short and long term costs are preferred. The use of an open office layout reduces initial construction costs, future remodeling costs and building operating costs. The cost of building an enclosed office is significantly higher than the cost of building an open office area and does not offer the flexibility and ease of adding workspaces or reconfiguring

a space that open office design does. A good open office layout enhances worker satisfaction and productivity by allowing natural light to be shared by more employees and promotes team work and information sharing, aiding in communications. Furthermore, an open office floor plan configuration has been found to affect the pattern of interactions, with less time spent in formal meetings and an increase in informal communication[2]. As an enhancement to worker comfort, an open plan significantly increases the efficiencies of heating and cooling systems which in turn reduces energy usage.

Figure 2 provides examples of three common office typologies using the same footprint. As shown, open office designs can provide efficiencies in space by providing more office space within the footprint of the space. Internal location of closed offices or conference rooms are preferred for all office typologies. Maintaining light transmission through the use of glass walls is encouraged, to allow for natural light to be shared by more employees. Externally located closed office spaces are discouraged because they are the least efficient and most costly. [3]When reviewing designs that include closed office typologies, compelling reasons should be provided that address the guiding principles, the University Mission, and demonstrate that job tasks require a high level of complexity, confidentiality and contact with external parties.

[2] Davis, M.C., Leach, D.J, & Clegg, C.W. (2011). The Physical Environment of the Office: Contemporary and Emerging Issues. In G.P. Hodgkinson & J.K. Ford (Eds.), *International Review of Industrial and Organizational Psychology* (Vol. 26, 99. 193-235). Chichester, UK: Wiley.

Figure 2: Common office typologies

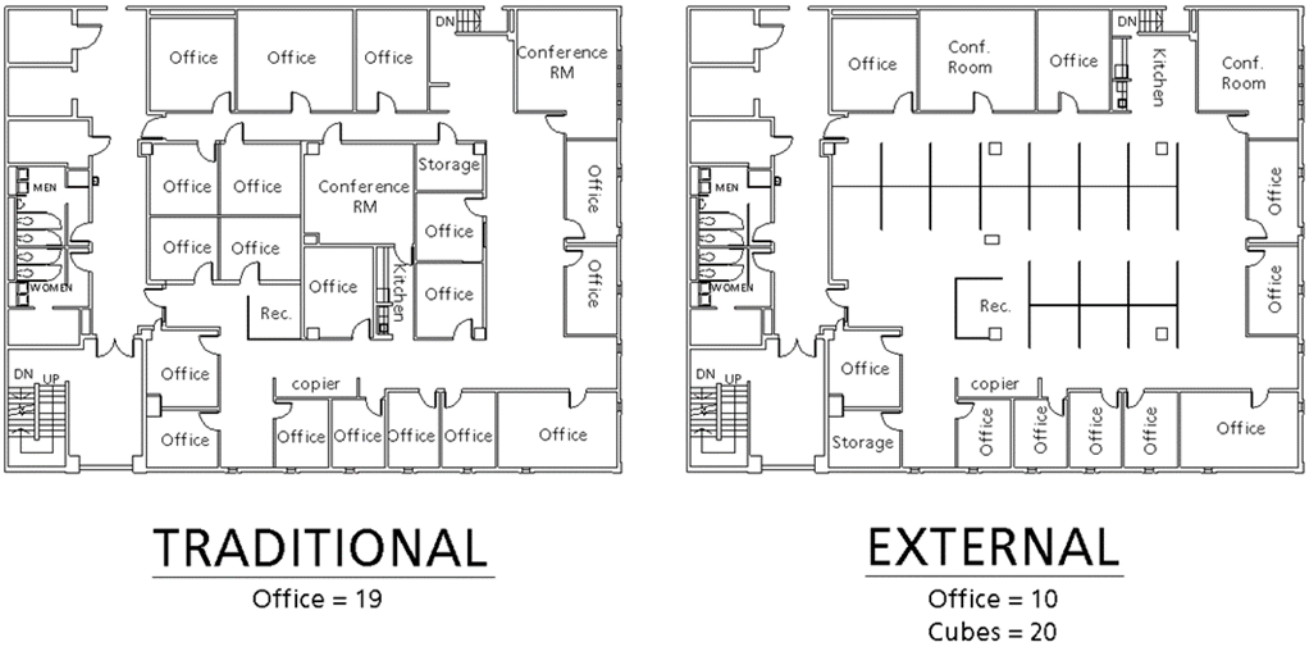

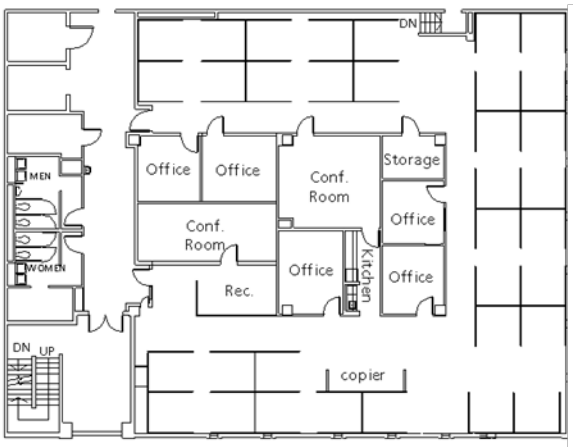

Allocation

The decision about whether to allocate an open office or a private office and whether space should be shared or unshared should be made on the basis of the type of work an individual performs and their time appointment (full-time vs. part-time, seasonal vs. year round). The following table assigns the size and type of office based on job function and time appointment. Examples of typical job titles are included as reference, however, each space should be assigned based on individual evaluation of job function rather than title.

Unless a job's function requires additional space for meeting and whose need for confidentiality, security, visual and acoustical privacy cannot be accommodated in a breakout room, open office layouts should be prioritized.

Office Space Standards

Job Function	Typical Assignment	Office Type (Private, Open)	Shared/ Unshared	Goal NASF per FTE
1.0 FTE staff/faculty that require frequent meetings with four or more others and require confidentiality, security, visual and acoustical privacy.	President, Provost, Vice-President/Provost	Private	Unshared	200*
1.0 FTE staff/faculty that require frequent meetings with up to four others and require confidentiality, security, visual and acoustical privacy.	Dean, Department Chair, Executive Director	Private	Unshared	120*
1.0 FTE staff/faculty that require frequent meetings with up to two others and/or requiring confidentiality, security, visual and acoustical privacy.	Managers, Directors, Faculty, Academic Professional Staff	Private	Unshared	100*
1.0 FTE staff/faculty whose functions do not require additional space for meeting and whose need for confidentiality, security, visual and acoustical privacy can be accommodated in a breakout room.	Professional Staff, Faculty, Academic Professional Staff, Support Staff	Open	Unshared	42-72*
.5 FTE Staff/faculty with functions that require meeting up to two others and/or requiring some confidentiality, security, visual and acoustical privacy.	Adjunct faculty, Graduate Teaching/ Research Assistants	Private	Shared	45-60*
.5 FTE staff whose functions do not require additional space for meeting and whose need for confidentiality, security, visual and acoustical privacy can be accommodated in a breakout room.	Part-Time Support Staff, Student Employees, Graduate Assistants, Interns	Open	Shared	21-36*
Less than .5 FTE or temporary staff/faculty	Visiting Scholars, Emeritus	Private/Open	Shared/Unshared	As available

** Square footage numbers represent goals and spaces may be more or less than the goal due to program considerations, unique building circumstances, budget and other factors.*

Older Buildings and Non-Conforming Space

The Portland State campus has a wide variety of building stock; dating from the late 1800s to the present day. Older buildings present challenges when it comes to remodeling and conforming to the standards presented here. In these situations the Campus Planning Office can assist with space planning with the goal of meeting programmatic needs within an older footprint.

Special Circumstances

Multiple Offices – Assignment of multiple offices for faculty and staff is not permitted at Portland State University. Faculty with joint appointments and persons with staff in multiple buildings may be assigned a secondary work station in a shared or open office if there is a true demonstrated need.

Unoccupied/Underutilized Offices – When offices are left unoccupied for a significant period of time or are underutilized, departments should utilize these spaces to alleviate any pressing space needs. If offices remain unoccupied for over six months, they will be turned back over to the University for reallocation.

Emeritus Office – emeritus faculty with significant continuing research and/or teaching responsibilities may be provided shared office space (private or open), if available, as long as they remain engaged in department activities and their home department has adequate space.

Visiting Scholars – visiting scholars may be provided shared office space (private or open) if available.

When special circumstance meet the guiding principles of efficient space use and the mission of the University and are approved by the Standards Committee and the Space Allocation Committee they may qualify for a variance. Refer to the variance section on page 20 for the application process.

Office Accessory Spaces

Introduction

There are a number of spaces associated with office space in planning and/or renovating buildings. Some of these include conference rooms, breakout spaces, kitchen space, break rooms, office service areas, and storage space. These areas are important spaces for everyday office functions and as part of Portland State University's commitment to creating a workplace environment that promotes health and wellbeing, and are particularly valuable in open office environments. These areas can present challenges in the establishment of standards due to the varying degree of needs for these types of spaces.

To ensure efficiency and high utilization, office accessories should be shared by departments whenever possible. For the purpose of these standards there are three types of management associated with office accessories:

General University: Managed by a department(s) but available to all university staff and faculty and made available through Google calendars. Conference rooms are available on a first come first serve priority. This management type would include all large conference rooms (seating 15 or more) and is encouraged for all other conference rooms as well as other office accessory spaces.

Departmental Share: Managed by a department(s) and available at most times to the university staff and faculty. University Community would request space through the department. This management type would include all medium and small conference rooms (seating 8-14) that are not 'General University' rooms.

Departmental: Managed by department and generally not available to the rest of the university community. Typical functions that would require departmental conference rooms are:

- Academic Departments who use rooms for seminar instruction (seating less than 12). (departments are encouraged to share these rooms with other departments within their school/college)

- Research groups whose conference rooms are also used as workrooms

Academic and administrative departments have varying functional needs throughout campus. While some departments may need minimal or no office accessory spaces, other departments may require additional and/or specialty spaces to meet their functional needs. The Campus Planning Office will work with departments to determine individual department's office accessory space needs.

The following standards, policies, and procedures describe the typology, size and furniture layouts for most common types of office accessory uses at Portland State University. Not every department on campus will need all of the following spaces, these standards will apply to those departments whose functions deem these accessory spaces appropriate for their functions.

It is important to note that in order for an open office to be successful, employees should be provided with adequate accessory spaces where they're able to seek visual and acoustical privacy as needed.

Office Accessory Spaces

Conference Rooms: Conference rooms are an important asset to PSU and daily office functions. Conference rooms vary in sizes across campus and provide space for quick impromptu meetings, administrative meetings, and space for academic departments to hold seminar classes.

Departments have varying needs for conference rooms. It is important to meet those needs, while also ensuring that conference rooms are well utilized. Conference rooms can present utilization challenges, as they can occupy a large footprint in a department's allocated office space and can be unused many hours per week. It is important for departments to track the utilization of their 'Departmental' conference rooms, if they have any, and open conference rooms up to the university community when rooms are underutilized.

Construction of new conference rooms should be strategically planned near department entrances or along shared corridors to allow for ease of use by the University community. Conference rooms should be shared with the general university whenever possible. For the purpose of these standards there are three types of conference rooms:

Large Conference Room: seats 15 or more occupants and provides space for audio/visual equipment, a screen and/or white board for projection and display, and may also include bookcases or shelves, and a serving area for buffet food or coffee services.

Medium Conference Room: seats 8 to 14 occupants and provides space for audio/visual equipment, and a screen and/or white board for projection.

Small Conference Room: seats 4 to 7 occupants and may provide space for audio/visual equipment, and a screen and/or white board for projection.

The number and size of conference rooms will heavily depend on the office typology and the demonstrated need of the department. The area required for conference rooms depends on the room configuration, furniture type and layout. The amount of space required per person generally decreases as the room area increases, due to the ratio of space required for circulation and ADA accessibility. The net assignable square feet (nasf) per person is generally 25 for small conference rooms, 22.5 for medium and 22 for large. Area must also be added to accommodate the floor area footprint of audio/visual equipment, displays, bookcases or shelves, serving counters for buffet food or coffee services and other operational facilities as necessary. The total number of conference rooms required to serve a grouping of office areas varies widely depending on the functions of the departments and the number of employees in an open office environment. The following standards serve as a framework for determining the number of conference rooms in each area. To ensure the best fit departments should contact the Campus Planning Office for a study on conference room needs.

Traditional Office Layout (majority of private offices, minority of cubicles):

- 1 conference room per 30 FTE or 125 sf per 10 FTE
    - 2/3 of conference rooms should be medium (8-14 people)
        - Ownership: Departmental share or departmental
    - 1/3 of conference rooms should be small (4-7 people)
        - Ownership: Departmental

Open Office Layout (majority of cubicles, minority of private offices):

- 1 conference room per 10 FTE or 375 sf per 10 FTE
    - 1/3 of conference rooms should be medium (8-14 people)
- Ownership: Departmental share or departmental
    - 2/3 of conference rooms should be small (4-7 people)
- Ownership: Departmental

In general, large conference rooms (seating 15+) will be constructed for larger departments or where a need within a building can be demonstrated. The number and size of the conference rooms will be determined by the Campus Planning Office based on a functional need assessment of the building. Large conference rooms may be allocated to a department (to be determined by the Campus Planning Office) but will be available to be scheduled by any department on campus via the Google Calendar. These rooms should include audio/visual equipment, a screen and/or white board for projection and display, bookcases or shelves, and a serving area for buffet food or coffee services whenever possible.

Breakout Rooms

Breakout rooms are an integral part of the open office layout. Breakout rooms provide staff and faculty a quiet area for private conversations (in person or on the phone) or a quiet area to focus on work. These rooms are often unscheduled and available for employees at any time. As established above, an open office layout allows for additional small conference rooms. Conference rooms that are departmentally controlled are encouraged to be used as breakout rooms for staff and faculty when meetings are not scheduled. Additional smaller breakout rooms may be created if departments have frequent meetings and/or need additional quiet

workspaces, which can be especially important in open space environments. These rooms should be equipped with data jacks for phone and network connections.

Community Spaces

Community spaces include kitchens and break rooms and are an important asset to an office and the health and wellbeing of staff and faculty. Community spaces increase productivity and morale by providing staff and faculty a place to relax, store and prepare food, and build positive relationships.

While community spaces are an important asset to an office, the construction of small kitchenettes or break rooms in every department is an inefficient use of space and resources and many departments don't have the resources or space to provide them.

Portland State University encourages general university and departmentally shared community spaces whenever feasible. Centralizing community spaces provides equity across departments, ensuring that all employees have access to kitchens and break rooms. It also provides a cost savings in terms of appliance purchases and use, and is more sustainable in terms of energy use. In addition, centralized community spaces provide opportunities for collaboration and relationships with other departments.

Departmentally controlled kitchens and break rooms are discouraged at Portland State University. When departmentally controlled community spaces are requested, departments need to provide compelling reasons that address the guiding principles and the PSU mission.
The size of and number of community spaces created for new construction will depend on the functions and size of the building. The Campus Planning Office will work closely with Capital Projects and Construction to determine the number, size and locations of community spaces.

Office Service Area and Storage

Office services areas and storage include printers, copiers, files and shared office supplies. A separate office service area for each work group or small department is discouraged whenever feasible. Creating centralized office service areas improve space utilization as well as cost efficiencies (equipment costs can be shared) and are more sustainable (reducing energy and costs resulting from operating duplicative equipment and procurements and costs resulting from small orders of the same supplies rather than one larger order.

In circumstances where a centralized office service area is not feasible, larger departments and/or departments that require privacy and confidentiality, a departmentally controlled office service area may still be considered. In these cases, departments should work with the Campus Planning Office to determine the amount of space needed for office service functions.

Storage areas for files should also be minimized as much as possible to save space and fulfill the Oregon Administrative Rules (OAR) retention policies regarding the discard/destruction of unnecessary documents, manuals and duplicated and outdated materials. File rooms shall be limited to only items that cannot be digitally archived when feasible. Departments should adhere to their records retention policies to ensure efficient space utilization.

As a standard, departmentally controlled open office service and securable storage rooms are not to exceed 10% of the office space allocated to the department. For example, if a department is allocated 1,000 nasf, office services and storage areas will not exceed 100 nasf.

Office Accessory Allocation

Office Accessory Standards

Office Accessory	Allocation	NASF goal per Occupant	Total NASF goal	Total # of People
Large Conference Room	General University	22	330+	15+
Medium Conference Room	General University or Departmental Share	22.5	180 - 315	8 - 14
Small Conference Room	General University, Departmental Share or Departmental	25	100 - 175	4 - 7
Breakout Rooms	Departmental Share or Departmental	25	100	4 Max.
Community Space	General University, Departmental Share or Departmental	20	Based on building needs	Based on building needs
Office Service Area and Storage	Departmental Share or Departmental	N/A	Not to exceed 10% of departments total office NASF.	N/A

Requesting a Variance to the Standards

All departments on campus are required to adhere to the space standards presented in this document. A variance from these standards may be justified, but would need to go through a rigorous case-by-case process to ensure that the variance meets the guiding principles of efficient space use and the mission of the university. If a department wishes to deviate from the standard(s) they must submit a proposal to the Campus Planning Office.

Variance Process

The process for requesting a variance of the standards stated in this document is as follows:

1. Department requesting a variance will complete a *Proposal for Variance of Standards* (see appendix A) and submit the document to the Campus Planning Office
2. Upon receipt of a completed variance proposal the Campus Planning Office will work with the department to provide guidance and an administrative decision.
3. If the applicant would like to appeal the administrative decision, they can notify the Campus Planning Office. Campus Planning would then submit the appeal request for review by the Space Allocation Committee.

Authority and Application

The Campus Planning Office will make the final decision on whether to grant an approval for variance.

Appendix A:

Proposal for Variance of Standard

All departments on campus are required to adhere to the space standards presented in the **University Space & Furniture Standards and Policies**. If a department wishes to deviate from the standard(s) they must submit a request to the Campus Planning Office.
All variance proposals must have approval from the Academic Department Dean or Administrative Unit Director and the appropriate Vice President/Provost.

Please send completed request to:
Campus Planning Office
Space Management Analyst
Mail Code: CPO
Email: lucius@pdx.edu

For questions please contact:
Lucius Shields, Space Management Analyst
(503) 725-4939 or
Ernest Tipton, Assistant Director for Facilities Planning & Campus Design (503) 725-4318

Information Required and Criteria for Decision

The following information is required when preparing a proposal for variance of space standards. It is imperative that this proposal is as complete and as detailed as possible to enable the Space Allocation Committee to make a well-informed decision.

1. Department Name
2. What standard(s) are you requesting a variance from?
3. What specific functions will occur within the space for which you are requesting a variance?
4. How does deviation from the standard(s) reflect your department's mission, vision and goals?
5. How does deviation from the standard(s) fit into the space standard's guiding principles? Address all of the following questions:
    a. How does deviation from the standard(s) reflect the long-term investment of the physical resources and systems at Portland State University?
    b. How does deviation from the standard(s) promote Portland State University's leadership role in sustainability?
    c. How does deviation from the standard(s) reflect the learning outcomes of the University and the promote student success?
    d. How does deviation from the standard promote equity and inclusion at the University?
    e. How does deviation from the standard(s) allow for flexibility and promote adaptation to account for an evolving pedagogy and changing student demographic?
6. What are the specific budget impacts of your variance request?
7. Signature and Date: provide signature and date of proposal approval from the Academic Department Dean or Administrative Unit Director and the appropriate VP/Provost.

Appendix B:

Definition of Terms

Gross Square Feet (GSF)

Definition: The sum of all areas on all floors of a building included within the outside faces of its exterior walls, including all vertical penetration areas, for circulation and shaft areas that connect one floor to another.

Basis for Measurement: Gross Area is computed by physically measuring or scaling measurements from the outside faces of exterior walls, disregarding cornices, pilasters, buttresses, etc., that extend beyond the wall faces. Exclude areas having less than a 3-foot clear ceiling height unless the criteria of the separate structure are met.

Net Assignable Square Feet (NASF)

Definition: The sum of all areas on all floors of a building assigned to, or available for assignment to, and occupant or specific use.

Basis for Measurement: Net Assignable Area is computed by physically measuring or scaling measurements from the inside faces of surfaces that form the boundaries of the designated areas.

Campus Space Categories

Classrooms: General purpose classrooms, lecture halls, recitation rooms, seminar rooms, and other spaces used primarily for scheduled non-laboratory instruction.

Laboratory: Room or spaces characterized by special purpose equipment or a specific configuration that ties instructional or research activities to a particular discipline or a closely related group of disciplines.

Office Facilities: Offices and office accessory spaces, such as conference rooms, break rooms, copier/supply rooms, and workrooms, specifically assigned to academic departments and administration.

Library/Study Facilities: Study rooms, stacks, readings rooms, and library processing spaces.

Special Use Facilities: Athletic and physical education spaces, media production rooms, clinics, demonstration areas, animal quarters, greenhouses, and other room categories that are sufficiently specialized in their primary activity or function to merit a unique room code.

General Use Facilities: Assembly rooms, exhibition space, food facilities, lounges, merchandising facilities, recreational facilities, meeting rooms, child and adult care rooms, and other facilities that are characterized by a broader availability to faculty, students, staff , or the public than are special use areas.

Operations & Maintenance: Non-assignable spaces used to support cleaning, public hygiene, networking & telecommunications, and mechanical equipment and utility services.

Residential Facilities: Housing facilities for students, faculty, and staff. These areas include residential activity spaces, such as lounges, communal kitchens, and game rooms.

Other: This section includes health care services and hoteling services.

Appendix C:

Hallmarks of a Productive Workplace

HALLMARKS OF THE PRODUCTIVE WORKPLACE

Spatial Equity: *The workplace is designed to meet the functional needs of the users by accommodating the tasks to be undertaken without compromising individual access to privacy, daylight, outside views, and aesthetics.*

Healthfulness: *The workplace is housed in a healthy environment with access to air, light, and water, and is free of harmful contaminants and excessive noise.*

Flexibility: *The workplace configuration adapts to typical organizational and work process changes but can also be readily restructured to accommodate major functional changes.*

Comfort: *The workplace allows workers to adjust thermal, lighting, acoustic, and furniture systems to meet personal and team comfort levels.*

Technological Connectivity: *Workplaces on site (e.g. team space, conference/multimedia space, hoteling space) and off-site (e.g., satellite office, home office) allow easy communication among distributed co-workers while allowing simultaneous access to data.*

Reliability: *The workplace is supported by state-of-the-art heating, ventilation and air conditioning (HVAC), lighting, power, security, and telecommunication systems/equipment that require minimal maintenance downtime and are designed with back-up capabilities to insure minimal loss of service.*

Sense of Place: *The workplace has a unique character, with an appropriate image and identity, enabling a sense of pride, purpose, and dedication for both the individual and the workplace community.*

The US General Services Administration (GAS) report "Innovative Workplace Strategies"

Appendix D:

Protocols for an Open Office Layout

Moving from a private office setting, where one 'owns' a desk and a certain space around it to an open office environment with shared spaces and/or desks can be a difficult transition for some. People working in an open office environment or sharing an office/cubicle should develop jointly agreed on workspace protocols and codes of conduct. Below is just one example of how to determine protocols for your office space.

1. Recognize the factors that cause irritation, loss of goodwill, and anxiety when working in an open office layout

An open office layout requires people to decide and implement protocols for amiable space sharing. It is important to establish a list of potential issues that may arise that co-workers should agree on. Below is an example of some potential issues to consider:

- ***Confidentiality*:** handling sensitive information in the open areas, degree of privacy
- ***Space Usage*:** storage space, common areas, use of wall spaces, use of empty offices/cubes and scheduling use, knowing when someone doesn't want to be interrupted
- ***Noise*:** radios, headphones, phone rings, conversations
- ***Smells*:** scents and perfumes, food
- ***Cleanliness*:** desks, equipment

2. Convene a small group representing the population to draw up protocols

Ideally everyone would have a hand in drawing up guidelines for an open office layout. For smaller offices this may be possible. For larger offices it is generally easier to establish a smaller group (4 to5 people) who represent the population of the office. This group can establish a set of protocols that can then be shared with the entire office.

The group should represent the population of the office and be selected by nomination, vote, or volunteering. Local protocols should not be decided by supervisors or issued as a mandate.

3. Develop protocol content

A protocol is a description of a performance or behavior you want people to exhibit. In order to protocols to be successful it is important for people to understand it. For example if you are establishing a protocol for supplies you may say, "If supplies run out it can take 24 hours to fulfill an order. Please notify the office coordinator if you notice supplies are running low."

As you are developing the protocols it is important to think about how these potential protocols are going to function in the office. Below is a list of questions you may want to think about while establishing protocols:

- Is it fair and equitable?
- Does it cover an area where there are likely to be conflicts and/or disagreements?
- Is it clear and well bounded?
- Does it adequately address the motivations, strengths, and weaknesses of the office?
- Does it account for any constraints that may make it unworkable?
- Does it self-operate given the goodwill of the office or does it require management attention to monitor and enforce?
- Does it add value to the workspace or is it unnecessary?
- Does it provide for local interpretation if needed?
- Is it flexible and adaptable to meet new circumstances?

- Is it based on developing responsibility, cooperation and collaboration rather than on selfishness, competitiveness and punishment?

4. Review content with whole target audience and make any amendments

When your team has drafted the content for each of your office protocols circulate them to everyone who is in the office for their comments, suggestions, and modifications. Make any amendments based on feedback.

5. Agree how they will be tracked and monitored and determine how you will handle non-compliance

The protocols are established to smooth the path of working together in a consistent, compatible and well understood way. If people do not comply with the established protocols what are you going to do about it? Make sure you know ahead of time how you will handle non-compliance.

6. Implement the protocols for a trial period

It is very unlikely that you will get the protocols right from the start. When you introduce the protocols be sure to establish a trial period for them. At the end of the established trial period conduct a formal review of their effectiveness and make any adjustments needed.

Portland State University Classroom Standards – 2025

Purpose

Provide guidelines for classroom design to ensure that learning spaces meet the needs of students and faculty.

The standards and recommendations for classroom design are intended to create classrooms that are characterized by the following qualities:

- Appropriately located, sized, and configured, to meet scheduling and academic programming needs
- Facilitate current pedagogy, integrating technology as appropriate
- Flexible, to cater to multiple learning styles through multiple activities
- Adaptable over time, to facilitate evolving pedagogy, changing student demographics, changing technology, and need to use classrooms for a variety of activities
- Accessible (further discussed in Appendix A)
- Promote personal safety
- Facilitate connections between students
- Facilitate interaction between students and faculty
- Attractive and comfortable
- Durable and cost effective to maintain
- Minimize environmental impacts

Scope

The standards and recommendations apply to the construction of new classrooms and renovations of existing classrooms. The standards apply to both general pool and departmentally controlled classrooms. These standards are not intended to apply to specialized learning spaces, such as teaching labs, studio space, or research space.

These standards are meant to complement internal standards developed by departments:

- Capital Projects & Construction maintains Technical Design Standards that specify construction parameters and preferred products (such as light fixtures)
- The Office of Information Technology maintains standards for technology, including computers and projectors (an appendix of this document)

When possible, classrooms should be designed with faculty input, to ensure that spaces are compatible with current and evolving teaching practices. In some cases, the end users of classrooms are not known during the design stage, and standards provide an important guide for creating quality learning spaces.

All newly constructed classrooms shall be general pool classrooms unless they are designed to meet a specialized instructional need, such as a studio or lab.

Context: Current Trends in Pedagogy

Changes in teaching practices directly affect how classrooms are used. Two current trends impact classroom design: active learning and changing use of technology.

Active Learning

An increased focus on “active learning” in the classroom requires specific classroom functionality. Classrooms must accommodate increased collaboration, allowing students to work together. In some cases, classes are “flipped,” with lectures distributed online and class time being used entirely for exercises, group work, and interaction with the instructor. In other cases, class time is a combination of traditional instruction and activities. When not lecturing, the instructor must be able to access the entire room to provide guidance to students working in groups. Depending on the subject, activities may benefit from multiple whiteboards, screens, smartboards, or computers for student use.

Use of Technology

The increased use of technology may be changing the role of physical space on campus. Activities that may occur in classrooms include:

- Viewing of multimedia content
- Video-conferencing and/or streaming of content from outside the classroom
- Recording and/or streaming of lectures and content for viewing outside the classroom
- Use of provided computers and other electronic devices, whether stationary computers or laptops
- Use of personal computers and other electronic devices, sometimes in combination with provided electronic devices

The classroom standards were informed by these two trends. Although not every classroom must facilitate every activity, design choices, such as the inclusion of ample electrical outlets and sufficient Wi-Fi capacity, can impact the long-term flexibility of classrooms. As pedagogy continues to evolve, classroom standards must be revisited.

Classroom Standards & Considerations

Number, Types, and Scheduling of Classrooms

Decisions regarding the size and type of new classrooms must reflect current demand for existing classrooms, while considering potential programmatic changes.

Design decisions can improve the utilization of classrooms.

- Desirable classrooms are used more frequently
- Classrooms with sizes that correspond to typical enrollment caps are more fully occupied (for example, classrooms that accommodate 47 students, cannot accommodate courses with enrollment caps of 50)

There are several types of classrooms, reflecting size and pedagogy.

- Seminar Rooms
    - Small classes, significant student interaction
    - Preferred flat floor
    - Large tables or moveable tables and chairs, ensuring that movement is not restricted in small rooms
    - Students typically face each other
- General: Flexible
    - Preferred flat floor
    - Moveable tables and chairs
- General: Active Classrooms
    - Preferred flat floor
    - Movable tables with brake caster and chairs
    - Includes 3 or more whiteboards
    - Enhance AV equipment
- General: Hybrid Classrooms
    - Preferred flat floor
    - Movable tables and chairs
    - Option for remote attendance
- Lecture Hall (Medium Size)
    - Preferred no tiered
    - Prefer minimal slope floor for accessibility
    - Fixed tables with movable chairs as an option
    - Moveable tables and chairs on flat rooms
    - Fixed seats with dropdown tablet at tiered
- Auditorium (Large Size)
    - Preferred no tiered floor
    - Fixed seats with dropdown tablet

When constructing new classrooms, consult with the Planning and Sustainability Office Office, Capital Project & Construction, Office of Information Technology, and Academic Scheduling to determine the appropriate size and type of classroom(s) to construct, given current campus utilization and the location of the classroom(s) to be constructed.

The relationship between room size and capacity is addressed in Appendix B.

Placement and Adjacencies
The placement of classrooms affects utilization and the learning experience.

Ideal classrooms are in locations characterized by:

- Accessibility, specifically including wheelchair access to all floors where classrooms may be located
- Intuitive wayfinding from entrances, through location on ground floor or near stairwells and elevators
- Compatible adjacent functions:
    - Sufficient circulation and “queuing” space for transitions between classes
    - Seating, for gathering before and after class, informal interactions with students and instructors
    - Common areas, for meeting & collaboration
    - Research space and faculty spaces to encourage additional interactions
    - Teaching labs, if likely to hold courses with association lab component
    - Storage space with corridor access, in addition or instead of access from within the classroom to allow flexibility and access during class as needed
    - Restrooms, including accessible stalls, including All User restrooms
    - Classrooms located near noisy uses or mechanical areas should be enhance with acoustic separation wall

Proximity to other uses is a desirable feature in classrooms. General pool classrooms should be included in every new campus building, and be a primary component of any new or renovated building near the core of campus.

While proximity to faculty offices is desirable, and a primary factor in high utilization, classrooms should not be located behind departmental functions. Such locations limit long-term flexibility and can limit access to classes.

Buildings containing classrooms must include sufficient circulation space, with entrances, stairwells, and elevators that can accommodate large groups. Additional restrooms are needed. Where possible, large classrooms should not be located adjacent to each other. Entrances to large classrooms should not face each other, but should be staggered, to decrease crowding in corridors. Recessed entrances and alcoves prevent opening doors from obstructing corridors.

Classroom Size, Shape, and Infrastructure
While furniture can easily be rearranged or replaced, the “shell” of the classroom cannot easily be changed over time.

Ideal classrooms are characterized by:

- Accessibility
    - Accessibility seating must be easily accessible and visible from classroom entrance
- Functional configurations
    - Shapes that reduce distances between the instructor and students, while ensuring clear lines-of-sight despite the presence of lecterns and equipment
        - Wide rooms are preferable to deep rooms, though multiple screens may be necessary
    - Tiered floors, only when required by large size of classrooms (tiered furniture should be considered as an alternative, to maintain long-term flexibility)
        - Tiered floors and furniture allow instructors with disabilities to maintain visibility while sitting
        - Wide tiers are preferred, to allow students from multiple rows to discuss content and collaborate for discussion
        - Fixed seating and tablet armchairs that are often found in tiered spaces are not always accessible furniture configurations. Provide accessible seating spaces at the main level of the classroom and provide adjacent fix seating for companions
        - Provide one accessible seat per 25 occupants
    - Sufficient wall space for white boards and screens, which can be used simultaneously (multiple white boards should be considered)
    - Consider adequate acoustic absorption materials: carpet, ceiling tiles, wall panels, and sound clouds.
- Doors located at the rear of the classroom, to minimize disruption, though multiple entrances are preferred to reduce congestion. Provide multiple doors at larger classrooms
- Windows for natural day light and views where possible, as they are frequently requested by instructors and students
    - Windows in the front of the classroom should be avoided
    - Tinted windows should be avoided
    - Windows may be located in the interior of the structure, providing connections to daylight corridors while limiting glare
    - Visual access from corridor is necessary to allow people in corridors to see if classrooms are occupied
        - While being low enough to accommodate people using wheelchairs, visual disruption should be limited
        - This could be lite in doors or side lites
- Lighting that contributes to comfort

    - Lighting should not create glare on screens or white boards
        - Emergency lighting should not be located immediately above projectors or screens
    - Lighting controls should be installed at every entrance, and within the lectern panel where feasible
        - Dimming controls preferred
    - Controls must be clearly labeled
    - Zones should be established in large classrooms
        - Zone options should be manual, rather than preset to modes, such as “presentation” or “lecture,” to allow flexibility
    - Occupancy sensors should be included to ensure that lights turn off when rooms are not occupied
    - Consider lighting standards from groups like WELL or LEED
- Minimize noise in and around classrooms
    - Increased sound from group work within the classroom must be accounted for, especially when classrooms are located next to each other
    - Mechanical equipment should not be located adjacent to classrooms or above ceilings
    - Moving components, like doors, must be quiet
    - Include acoustic components in classrooms, like carpet, acoustic panels, or roller shades to mitigate incidental noise
- Thermal comfort and strategic location of mechanical components
    - Air ducts should be placed away from projector screens and ceiling-mounted mics, to minimize noise interference
    - Access to mechanical equipment should be outside classroom if possible, to minimize disruption
    - Ensure that classrooms have a thermostat
- Adequate IT Services
    - Ample outlets, preferably located within floor or furniture
        - Sufficient electrical capacity
    - Appropriate wireless network connectivity
    - Coordinate with OIT and AV services

Flooring

Flooring material is selected with primary consideration for durability and sustainability. In small projects, environmentally friendly carpet tiles are the preferred flooring material. In larger renovations and new buildings where flooring is purchased in large quantities, polished and sealed concrete is an affordable option. Rubber flooring can be considered for lab building were chemical resistant is a concern. Vinyl Composition Tile (VCT) is discouraged, because of negative environmental impacts. Acoustic panels are required to offset hard flooring. When concrete is used, chairs and tables need to be carefully selected in order to minimize noise impacts from moving furniture. Sled base chairs and tables with locking casters work best here.

In small classrooms under 30 students, carpet tile may be appropriate.

Carpet is not appropriate in rooms with fixed seating, because of the high cost of maintenance and replacement. However, carpet may be installed in aisles. A durable painted finish on the concrete tiers is recommended.

Carpet tiles are preferred to allow for spot replacement over time, required because of wear and tear. Solid colors or simple patterns should be selected, as the original design may not be available in the future.

Window Treatments
Functional window treatments are needed to ensure visibility during multimedia presentations in classrooms. Window treatments are selected with primary consideration for ease of use, functionality, and durability.

In all cases, pull cords should be avoided, and curtains and blinds should be moved manually.

Manually operated roller blinds are preferred for light controls for classrooms.

In future large projects, the use of shades built into windows is preferred to reduce wear and tear.

Layout and Furnishings
Layout, furniture, and other components affect the functionality of classrooms for needed activities.

Ideal classrooms are characterized by:

- Signage on all entrances, clearly marked as classrooms
- Accessibility, allowing students and instructors of all abilities to access different portions of the classroom
- Wide aisles, to allow movement around classroom
- Table and Chairs instead of fixed tablet-arm chairs. Consider a layout with narrow tables with two seats.
- Chair rails, to prevent damage to walls
- White boards, not blocked by projector screens or other equipment
    - Potentially walls to have white boards for flexibility (ie Active Classrooms)
    - Potentially incorporated into wall surface, to create additional space
- Limited distance between seats and instructor
- Lectern location off to one side to facilitate lines of sight and interaction
    - Equipment can block lines of sight to screens/whiteboards
    - Stationary computers in the corner of rooms limit engagement with instructor during multi-media presentations
- Clocks, located on side wall if possible
- Accessible desks or tables should be readily identifiable when entering a classroom, like having different edge finishes or a slightly different size. Should be adjustable in height. Preferably manual versus electric. It should include an adjustable height comfort chair. (full criteria available through Disability Resource Center)
- Classroom to have two informational 8.5” x 11” sign frames near entrances, to install PSU Classroom layout

Other components might include:

- Multiple screens, multiple projectors
- Moveable white boards and/or pin-up space

Furniture
Furniture strongly impacts the operation of the classroom and the activities that can be accommodated. A mix of classrooms with tables and chairs is desirable. Tablet armchairs are not preferred in classrooms. All seats should be located within 90 degree viewing angle of projector screen.

Portland State University maintains a list of common suppliers for our preferred classroom furniture standard.

Moveable furniture should be selected with the following primary criteria:

- Affordable
- Durable
- Lightweight
- Comfortable

- Meet diverse needs of students
- Sustainable (materials and distance from manufacture)

In many cases, existing furniture can be maintained to meet the needs of students. Classrooms primarily designed for active learning may require unique furniture.

Chairs
Moveable chairs should be:

- Plastic & metal
    - Wood should be avoided, because of weight
    - Fabric and mesh should be avoided to ensure durability
- Solid colors (black & grey preferred)
    - Fluorescent and loud colors should be avoided, to maintain ability to move furniture to other locations as needed
    - A mix of colors should be selected to facilitate spot replacements over time

Chairs that may scuff floors should be avoided.

The products noted below, and their equivalents, meet standards. Many chairs are available in several alternatives with and without armrests. Others are available in multiple heights, which should be considered.

Chairs should be labeled with the building acronym and classroom number to prevent chairs from moving between classrooms. Label to be durable and visible.



Herman Miller – Caper



SitOnIt – Anytime



Doni – Stack Chair

New installations of fixed seating are expected to be limited. These products should be chosen with care. Fixed seats should swivel, allowing for interaction with nearby students. Ten percent of seating must accommodate left-handed students or be universally adaptable to both right and left hand.

Tables

Moveable tables should be:

- Made of lightweight material
- Wheels may be necessary, if tables are difficult to move
- A depth of 18-24 inches to accommodate books, notes, and electronic devices.
- Width should accommodate to students and two chairs, typically 60” to 72”.
- Should be labeled with the building acronym and classroom number to prevent tables from moving between classrooms. Label to be durable and visible but not on the desktop surface

The tables below, and their equivalents, meet standards. Tables may be modular, allowing individual use and combination for group work. Some small, high tables or adjustable height tables should be considered, to allow students to stand during class.





Herman Miller- Everywhere

Accessible Furniture

Accessible furniture should be included when classrooms are initially furnished to minimize the need for individual accommodation requests. Each classroom, instructional laboratory, and computer lab should include:

- One ergonomic, accessible chair for individuals requiring additional support beyond standard seating.
- One adjustable-height table, suitable for use with the ergonomic chair or as a standing-height desk.

If additional ergonomic furniture is needed, the Disability Resource Center (DRC) should be contacted to arrange further accommodations.

All accessible furniture should be labeled with the room number for which it is assigned and selected in collaboration with the DRC.

Tables & chairs are preferred over tablet arm chairs (with fixed arms) as a means to accommodate the diverse sizes of students including tall or pregnant students. If tablet arm chairs are required, they shall have drop down arms and layout shall allow for open spaces in the seating arrangement for ergonomic chairs with movable tables.

When possible, avoid creating multi-leveled classrooms with less than 60 seats. When designing rooms and spaces, show permanent furniture, fixtures, and equipment (e.g. accessories such as hand dryers, movable trash cans) in the drawings to make sure these items shall not encroach on accessible routes, turning spaces, and required clear floor spaces.

Space for wheelchair users shall be integrated, dispersed, and include a companion chair adjacent to the open wheelchair space. Multiple spaces may be needed in larger classrooms. Provide companion seat adjacent to accessible spaces, provide open space adjacent to a fixed chair on grade if fixed chairs are provided. Space for wheelchair users shall be adjacent to an accessible route. A clear line of sight to the instructor and media shall be provided at spaces for wheelchair users.

A minimum 42” clearance between aisles that lead to accessible seating shall be provided.



Human Scale - Float Table Base
General Adjustable Height Table
Features: Smaller width than standard classroom tables (~36” width) for use by single student, pneumatic adjustment preferred for easy adjustment. Electric adjustment would require power outlet and relegates students to locations along walls.



Espree - Pneumatic Table Base

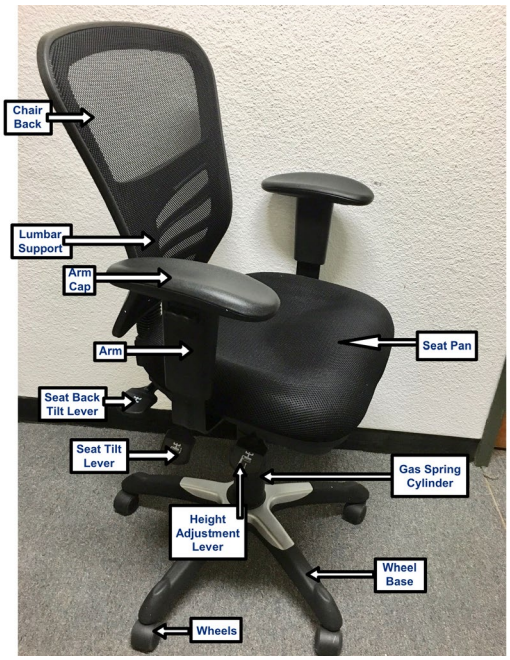

Accessible/ Adjustable Chair Style - Preferred by Disability Resource Center
General Ergonomic Chair Features: Lightweight chairs with padded seats, lumbar support and wheels.

Colors
Classrooms should feature a neutral color scheme throughout, with the option to include one or two accent walls for visual interest. In existing buildings, paint colors should be selected to complement adjacent classrooms and maintain overall continuity. In new buildings, color palettes may be developed in coordination with project partners to reflect a distinct or shared design identity.

Technology
Any technology installed in all general pool classrooms should be confirmed with OIT. Additional technology is installed in select rooms to accommodate different activities.

Classrooms are connected via the PSU campus network to a campus-wide audio-visual technology room management system. This system allows for staff to monitor room usage, lamp hours, and equipment security.

In addition to end-user technology, infrastructure must be incorporated ensure sufficient electricity and access to wireless networking.

General Pool Classrooms
All PSU general pool classrooms feature basic resident technology to support instruction:

- Ceiling mounted data projectors
- Room size appropriate projection screens
- Teaching podium

- Dedicated computer with dual monitors
- Document camera
- Integrated sound system for source devices
- Media player
- Wired connect for using portable media device (laptop, tablet, camcorder)
- Mics and speakers throughout classrooms
- Miscellaneous other monitors and equipment to be confirmed with OIT

Classrooms with 50 seats or more shall include an induction loop, FM transmitter or Bluetooth system with hearing aid compatibility. Technology needs to serve both people who have hearing aids and those who do not.

Technology within departmentally controlled classrooms is within the purview of the department.

Additional IT
In order to accommodate active learning activities, some classrooms may require multiple projectors and screens, monitors, and clusters of computers. When specific technology is likely to become obsolete, equipment should be installed in a fashion that facilitates replacement.

Appendix A: Accessibility Considerations

The special requirements of students and faculty with disabilities must be considered when designing and renovating classrooms. The goal of classroom design is to serve all potential users, including persons with mobility, hearing, vision, and mental disabilities. When designing and renovating classrooms, federal ADA Standards for Accessible Design must be applied. At PSU, the Disability Resource Center must be consulted about classroom design choices.

Classroom design components that require consideration include:

- Rise & run of any slopes in corridors and rooms, which must accommodate wheelchair users
- Detectable warnings, barriers and seat signage shall be provided where required in classrooms, auditoriums or assembly areas where there are significant changes in level.
- If elevated stages are provided, they shall be on an accessible path internal to the classroom or auditorium.

- Colors and color contrasts, which can create problems for students with autism
- Building access and egress for typical and emergency movement
- Location of signage and inclusion of Braille
- Width of doorways, which must accommodate wheelchair users
- Width of aisles and space to maneuver wheelchairs
- Air quality impacts, such as adjacency with potential irritants (exhaust vents and mechanical areas)
- Door opening mechanisms and opening pressure
- Ratio of stations that accommodate students in wheelchairs, and other seating that accommodates students with other limitations, including pregnancy
- Location of seating designed for students with disabilities, should be located near the entrance of classroom
- Location of lighting controls, which should be within reach of wheelchair users
- LED lighting fixtures should be selected and maintained to reduce the risk of seizures
- In performance or large lecture spaces, a designated area with adequate lighting shall be included for interpreters at the front of the room.
- In the classroom, adequate lighting shall be included in the lecture area so an interpreter can stand where the student has best line of sight to the Interpreter, the board, and the instructor. Seating space for a relief Interpreter should also be considered in the design.
- Lighting levels should be controllable with any LED light fixture that are installed
- Acoustics should be design to aid students with hearing impairment
- Audio amplification as needed

Accessible Furniture

1. Despite efforts to select classroom furniture that serves the diverse needs of students, alternative furniture is often required. The Disability Resource Center maintains an inventory of furniture in order to respond to individual requests.
2. Ergonomic, accessible furniture shall be placed in classrooms, instructional laboratories and computer laboratories as follows:
3. Rooms with up to 25 seats: 1 for students and 1 for a faculty member
4. Rooms with 26-75 seats: 2 for students and 1 for a faculty member
5. Rooms with 76-150 seats: 3 for students and 1 for a faculty member
6. Rooms with more than 151 seats: 4 for students and 1 for a faculty member
7. Specific furniture for the room types are as follows:
8. Classrooms: Ergonomic chairs and pneumatic adjustable height desks that adjust from at least 27” Above Finished Floor (AFF) to at least 38”.
9. Teaching laboratories: Accessible workstations
10. Computer laboratories: Electric height adjustable table and one fully adjustable ergonomic chair without arms
11. A variety of desks, tables, and chairs (both with and without arms) shall be included in common spaces.
12. Tables shall have four legs rather than pedestal bases. Wheelchair users require a depth of 19” and a width of 30” for accessible knee and toe space.
13. All ergonomic, accessible furniture placed by the Disability Resource Center shall have signage indicating that it is reserved for people with disabilities.
14. Technology
15. All technology shall be approved as accessible according to Electronic Information Technology Accessibility Policy
16.

Typically, a single desk and chair will be provided with new installation. Additional furniture maybe requested through the Disability Resource Center.

Appendix B: Square Feet per Student

The capacity of classrooms is determined by the size of the room and the space allocated to each occupant. “Square feet per student” is used to compare the efficiency of classrooms. Total square feet, including all circulation space, is divided by capacity to generate square feet per student.

The following standards should be used to ensure that classrooms can accommodate the appropriate number of students, and to ensure that sufficient furniture is installed.

Maximum Capacity	Room Type	Furnishings	Square Feet per student
0-29	Small	Large Conference table or Flexible Furniture	20-25
30-76	Medium to Large	Flexible Furniture Narrow Tables and Chairs	15-25
77+	Very Large - Flat	Moveable Tables and Chairs	18-22
77+	Very Large - Tiered or Sloped	Fixed Seating with Fold Down Tablet-Arms	13-18

Ranges are provided to reflect the diversity of furniture & pedagogy in classrooms. Rooms on the low end would be forward-facing, with little flexibility, while larger rooms would be tailored to active learning, with flexible furniture and additional equipment.

In some cases, exceptions may be necessary. Some classrooms may be repurposed spaces and some areas of the room may not be appropriate for seating, due to visibility issues. In these cases, additional circulation space may limit efficiency. In other cases, additional equipment, such as built-in cabinets, white boards, or IT equipment may increase the space needed per student.

In new projects, tradeoffs must be recognized. Efficient classrooms can accommodate large class sizes and, in some cases, allow a greater number of classrooms to be created. However, the need to facilitate many activities in the classroom will require more space per student in some classrooms. Careful furniture selection can accommodate flexibility while maintaining efficiency.

Appendix C: IT Standards

In progress

Portland State
UNIVERSITY

Portland State University Office Furniture Standards

July, 2016



Purpose

The furniture standards in this document were created to ensure a work environment that is safe, welcoming and conformable for faculty, staff, students and visitors of Portland State University. The standards were developed as a holistic approach that:

- Supports the Portland State University Office Standards and Policies
- Promotes ergonomic and healthy work environments
- Meets PSU's sustainability goals
- Creates high-quality, durable and long-term furniture solutions
- Is flexible in design allowing for furniture reuse and modifications to meet changing program needs
- Promotes equity across all disciplines and units
- Improves the furniture procurement process

Jason Franklin: Director of Campus Planning / 503.725.2031 / Jason.Franklin@pdx.edu
Campus Planning Office / campusplanning@pdx.edu / www.pdx.edu/campus-planning

Scope

The standards and recommendations in this document apply to new construction and major renovations and apply to office furniture only. While smaller purchases are not required to follow these standards, departments are encouraged to consider purchasing the furniture recommended in this document.

The University has also adopted classroom standards which provide classroom furniture recommendations. These recommendations do not specify manufacturers, but provide recommendations based on best practices research. The furniture decisions for all general pool classrooms and shared classrooms are made by the Campus Planning Office, except for large capital projects when they are made by the project's steering committee.

At this time PSU has not adopted standards or guidelines for lobbies or study spaces/lounges. Furniture decisions for spaces not assigned to departments are made by the Campus Planning Office, except for large capital projects when they are made by the project's steering committee.

Context

The Standards Committee, a sub-committee of the Capital Advisory Committee, reviewed PSU's current furniture practices, identifying several issues:

- The University has a mix of furniture of varying quality and design.
- Much of the furniture is old and out of scale, limiting flexibility and reuse.
- Much of the furniture is not ergonomic.
- New office standards required a new approach to furniture.
- Procurement processes for furniture can be cumbersome and inefficient.
- While PSU has a surplus furniture program, many of these pieces are old and out of scale.
- A lack of university-wide efforts to dispose of older furniture has created space issues on campus, with furniture stored in several buildings.

VENDOR/MANUFACTURER DECISION

During the summer of 2014, a committee of representatives from Facilities and Property Management (FPM), Capital Projects & Construction (CPC), Campus Planning Office (CPO), and the School of Business Administration (SBA) went through a rigorous furniture selection process. This process included faculty and staff input and took into account many factors including, but not limited to, cost, environmental impact, warranty, comfort and quality.

Through this process, PSU selected Watson as the preferred manufacturers for desks and conference room tables, as well as Herman Miller and Steelcase for panel options and conference room seating.

In the spring of 2016, PSU worked with two local vendors who supply the preferred manufacturers and signed contacts with competitive pricing for the approved furniture and finishes. The following vendors have local showrooms and can assist departments in applying PSU's furniture standards:

Pacific Office Furnishings

421 SW 2nd Ave

Portland, OR 97204

(503)242-4200

http://www.pacificofficefurnishings.com

Smith CFI

620 NE 19th Ave

Portland, OR 97232

(503) 226-4151

http://www.smithcfi.com

APPROVED FURNITURE AND FINISHES

Desks & Tables



Watson - Seven Desks and Tables

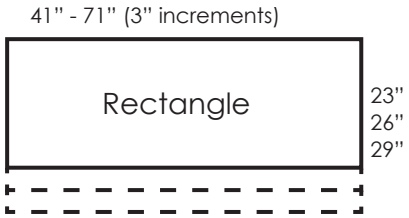

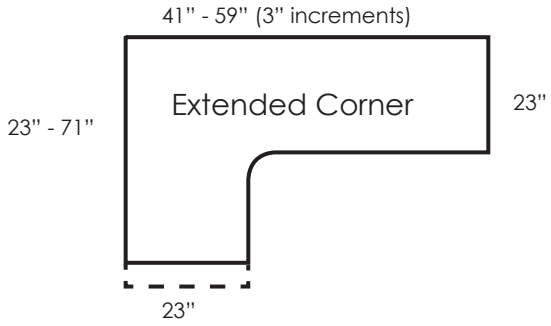

Desks: Watson Seven
Fixed or hight adjustable
(sit-to-stand collection)

Leg, Metal Components



Fashion Grey (FQ)
DEFAULT



White Aluminum (WA)
Electric Base Option

Desk Laminates & Edges



Rio (IJ)
90Q Trim: Satin Grey (GY)



Studio Teak (DT)
90Q Trim: Studio Teak (DT)



Blonde Echo (EH)
90Q Trim: Blonde Echo (EH)

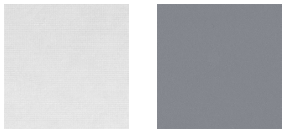

Gray Mesh (EG)
90Q Trim: Satin Grey (GY)



Kensington Maple (KM)
90Q Trim: Kensington Maple (KM)



Tuscan Walnut (TW)
90Q Trim: Tuscan Walnut (TW)

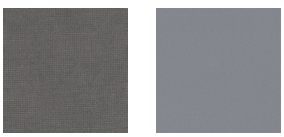

Steel Mesh (EK)
90Q Trim: Satin Grey (GY)

Privacy Screens



Watson - Privacy Screens

Privacy Screen Textile Colors

Anchorage Birch (9H)	Anchorage Henna (6H)	Anchorage Sunshine (S8)	Anchorage Graphite (9R)
Anchorage Vanilla (6V)	Anchorage Geranium (R2)	Anchorage Green Apple (1G)	Sprite Sky (7Y)
Anchorage Angora (9A)	Anchorage Pumpkin (99)	Anchorage Waterfall (U8)	Sprite Linen (2I)
Anchorage Goose (9E)	Anchorage Amber (9B)	Anchorage Asteroid (6D)	Sprite Snow (2W)
Anchorage Cumin (9U)	Anchorage Straw (9S)	Anchorage Fossil (6X)	

Office Panels



Steelcase Kick Panels (Partitions)

Frame Finish

Seagull

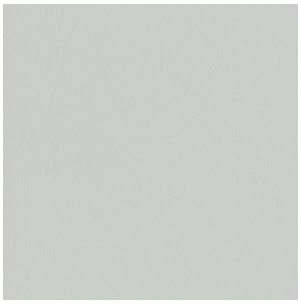

Fabric Finish

Alloy - Bubbly

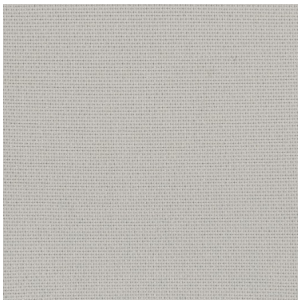

Panel Height:

42”, 48” or 54”

Panel Width:

24”, 30”, 36”, 42”, 48” or 60”

Optional Glass Stacker:

12”



Herman Miller - Panel Finishes

Panel Height: 39" or 53"

Optional 14"h Glass Stacker (clear or frosted)

Frame Finish

Folkstone Gray
8Q

Fabric Finish

Chain Springwood
(2V08)

Storage



Watson - Zo Colection

Sample selection:

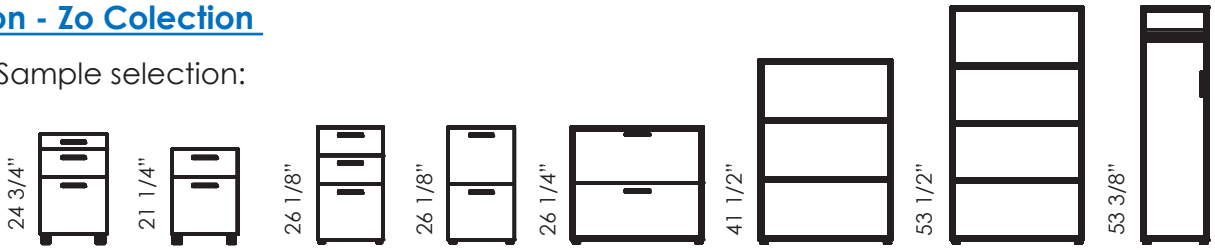

Laminate Front Storage Drawer and Door Faces

- Rio (IJ)
- Tuscan Walnut (TW)
- Steel Mesh (EK)
- Frosty White (FJ)
- Studio Teak (DT)
- Kensington Maple (KM) DEFAULT
- Blonde Echo (EH)
- Gray Mesh (EG)
- Fashion Grey (FQ)

Laminate Case

- Kensington Maple (KM) DEFAULT
- Tuscan Walnut (TW)
- Frosty White (FJ)
- Studio Teak (DT)
- Blonde Echo (EH)
- Fashion Grey (FQ)

Leg Finishes

- Fashion Grey (FQ) DEFAULT
- White Aluminum (WA) Electric Base Option

Pull

- Alto (Fashion Gray, FG) DEFAULT

Conference Chairs

Sit On It - Wit Chair



Frame: Black
Back Mesh: Onyx or Nickel
Fabric Seat: Sugar (all colors)
Licorice or Kiss (default)
Casters

Onyx/Licorice

Nickel/Kiss

Sit On It - InFlex Chair



With or without Arms
Upholstered Seat
Casters or Glides
Frame: Black
Fabric Seat: Sugar (all colors)
Licorice or Kiss (default)

Sugar Licorice

Sugar Toffee

Sugar Rock Candy

Sugar Barrypop

Sugar Cola

Sugar Candy Corn

Sugar Lemondrop

Sugar Cherrybomb

Sugar Chocolate

Sugar Kiss

Herman Miller - Caper Chair



With or without Arms
FlexNet Seat
4-Leg Stacker, Casters or Glides
Frame: Silver
Shell Color: Any, Graphit (default)
FlexNet Mesh: Black or Silver Gray (default)

Herman Miller - Setu Chair



Ribbon Arms
Multi-purpose
Cater
Frame: Graphit
Fabric: Twist (any color), Graphit (default)

Color selection

8T24 Black
8R10 Poppy
8R23 Green Apple
8R36 Midnight Blue
8R27 Cinder
8R22 Blueberry
8R12 Garnet
8R37 Carbon Dark
8R09 Cayenne
8R14 Tin

Steelcase Qivi



5 star base / arms or no arms
Sled base with arms only
Mesh back
Frame: black (default)

Qivi Back Mesh - Default Colors


QN02 Licorice

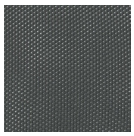
QN04 Graphite

Other Mesh Back Colors


QN01 Wasabi


QN05 Malt


QN06 Coconut

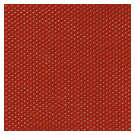
QN07 Scarlet

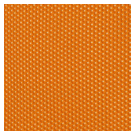
QN03 Tangerine

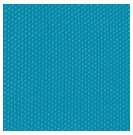
QN08 Blue Jay

Seating Fabric

5S15 Cconut


5S16Turmeric


5S17 Tangerine


5S18 Scarlet


5S19 Concord


5S20 Maya Blue

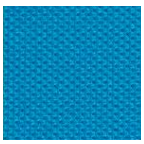
5S21 Blue Jay


5S22 Basil


5S23 Wasabi


5S24 Nickel


5S25 Graphit


5S26 Licorice


5S27 Malt


5S28 Root Beer

Steelcase Move



4 legs with arms
All plastic or upholstered seat
Back or platinum frame

Plastic Colors

6205 Back
6338 Chili
6332 Citron
6334 Flash
6335 Wasabi
6337 Element
6009 Arctic White
6059 Sterling Solid
6059 Midnight (Solar Black)
6333 Picasso
6336 Jazz
6249 Platinum Solid

Seating Upholstery

5F17 Back
5F15 Stone
5F08 Navy
5F07 Blue
5F05 Burgundy
5G58 Chocolate
5G57 Rouge
5G55 Pumpkin
5G53 Sunrise
5G51 Salde
5G65 Tornado
5G64 Alpine
5G59 Meadow

All-User Restroom Standard

I. PURPOSE/SCOPE

The purpose of this All-User Restroom Standard is to provide direction on the implementation of all user restroom facilities in all Portland State University (PSU) owned and operated buildings. PSU promotes access, inclusion and equity as pillars of excellence and believes that everyone should be treated with dignity and respect. Many people may experience difficulty and inconvenience when required to use gender specific restrooms. The Standard is intended to address several issues that are associated with gender specific restrooms:

- Individuals who don't conform to stereotypical notions of gender sometimes struggle when faced with only gender specific options
- Parents and caregivers with different gender children
- Community members with disabilities who need assistance from a different gender caregiver
- Some individuals are territorial about policing gender in public restrooms, creating situations that may lead to harassment towards trans and gender nonconforming people, different gender caregivers, and people with disabilities.

The Standard is managed and updated by the Campus Planning Office in collaboration with the Office of Global Diversity and Inclusion and the Queer Resource Center. The Standard was originally approved by the Capital Advisory Committee on August 11, 2015. The Standard applies to all PSU owned and occupied space. Section III, below, describes how the Standard is specifically applied.

II. DEFINITIONS

All-User single occupancy restroom: Any single occupancy restroom that does not designate a gender and can be used by people of any gender or gender identity.

Gender specific single occupancy restroom: Any single occupancy restroom that has been designated men or women.

All-User single occupancy (family): A large all gender single occupancy restroom that has been designated for family use.

All-User multi-stall: Any multi-stall restroom that does not designate a gender and can be used by people of any gender or gender identity.

Gender specific multi-stall: Any multi-stall restroom that has been designated men or women.

Major renovation: A renovation where the total project cost exceeds 50% of the building's replacement value.

III. ALL-USER RESTROOM STANDARD

All-user restrooms shall be provided in all new construction and major renovations and when financially feasible added to minor building renovations and incorporated into existing buildings. The required and recommend design standards are described below.

A. New Construction and Major Renovations

At least one multi-stall and/or single occupancy all user restroom will be created in renovated or newly constructed buildings. Occupancy loads will be the determining factor in the creation of a multi-stall all gender restroom. At least one multi-stall all-user restroom, and no single stall restrooms, will be created if the following occupancy loads are exceeded in a building:

1. 50+ FTE employees and 200+ student, or
2. 100+ FTE, or
3. 400 students

If the above occupancy loads will not be exceeded in a newly constructed or renovated building, then the construction of at least one multi-staff all-user restroom OR one single-occupancy all-user restroom will be created. Gender specific single-occupancy restrooms will never be created.

B. Alteration of Existing Restrooms

All buildings that had single occupancy gender specific restrooms have been converted to all-user restrooms.

Buildings that are not slated for a major renovation are eligible to have existing multi-stall gendered restrooms altered to create multi-stall all-user restrooms if funding is available. Assessment and feasibility is led by the Campus Planning Office who will seek input from the Queer Resource Center, Global Diversity & Inclusion, Facilities & Property Management, and Capital Projects & Construction.

Prior to alterations of an existing restroom to all-user, a notice for public comment will be given to occupants of the building to provide comments and feedback on the proposed plan to alter the existing restroom. This feedback will be taken into consideration. Final approval to alter a restroom is made by the Associate V.P. of Planning, Construction and Real Estate.

IV. REQUIRED DESIGN STANDARDS

The Standard will be incorporated in Portland State University's Technical Design Standards (TDS) and will use the same fixtures and stalls as indicated in the TDS Appendix 01.6 – Restroom Preferences.

A. Partitions will include no-sightline or ultimate privacy features such as high partition panels and a smaller gap at floor level than standards partition layouts.
B. Changing station will be included in all new and remodeled restrooms.

C. Single occupancy restroom will include ADA lever/closer hardware with secured locks that include occupancy indicators.
D. Urinals will not be included in multi-stall or single-stall restrooms.
E. Sanitary napkin disposals will be included in every stall.
F. Signage will conform to PSU Campus Planning Office requirements (appendix 01.7)and will include a standard symbol (pictogram) of a toilet and the verbiage "All-User".

V. RECOMMENDED DESIGN STANDARDS AND LOCATION

The following design recommendations should be incorporated when feasible. The locations of all-user restrooms will be determined by Capital Project & Construction project managers and should consider the following location and design recommendations:

A. Doorless entries to restrooms are encouraged.
B. Multi-stall restrooms should be four stalls or more.
C. Multi-stall restrooms that are converted from gendered to all-user should include informational signage with the following verbiage:
"This all-user restroom provides facilities that are safe, accessible, and convenient to all people, including all gender identities and expressions and people who require attendants or caregivers of a different gender."
D. Multi-stall all-user restrooms should be located in high-traffic areas and given the same location preference as gender specific restrooms.
E. When feasible, gender-specific restrooms should be within close proximity.
F. When feasible, the first floor should be avoided for single-occupancy all-user restrooms.

Introduction

Under the direction of the Campus Sustainability Office (CSO), Portland State University (PSU) encourages source reduction, reuse, and recycling of materials used in the operations and maintenance of the campus. Acknowledging that the campus generates significant amounts of waste, PSU has identified and prioritized waste diversion strategies to reduce demand for new materials and related harvesting or extraction of natural resources. Additionally, PSU acknowledges that disposal of solid waste by incineration or land filling produces greenhouse gas emissions and should be avoided through waste reduction and recycling whenever possible.

Scope

This plan applies to PSU's entire campus and addresses the following waste streams within the University's control:

Ongoing Consumables
Durable Goods
Facility Alterations and Additions
Mercury Containing Lamps
Batteries

Procedure and Strategies

Ongoing Consumables

PSU will identify the top most purchased product categories, based on total annual purchases. Examples of these include, but are not limited to: paper, plastics, cardboard/OCC, metals, glass, food scraps, toner cartridges, and batteries. All building occupants will be encouraged to recycle paper, plastics, cardboard/OCC, metals, glass, toner cartridges, and batteries, and to compost food scraps. Provisions will be made for building occupants through collection stations which will be placed throughout campus buildings according to the following guidelines:

- Approved paper recycling bins will be provided at each shared copier / printer station and serviced by contracted custodial services.
- Centralized waste stations for recycling and garbage will be provided for open office areas. Additionally, staff can opt to obtain a desk-side recycling container that they can empty at waste stations at their convenience.
    - PSU custodial contractors do not service individual, desk-side trash cans. Building occupants are responsible for emptying their own trash and recycling containers into centralized collection containers.
    - Centralized waste stations are serviced by contracted custodial services and all recycling bin contents are hauled to a materials recovery facility by our contracted hauler.
- A battery recycling bin will be provided for all general office areas. The bins will be emptied upon request via work order.
- An approved a waste collection system will be provided for all kitchen / breakroom areas. The waste station will be specifically used for comingled plastic bottles/tubs, metal cans, paper, and cardboard, as well as a separate bin for glass. Signage at waste stations will clarify what materials may be deposited. These waste stations will be serviced nightly.

- An approved collection bin for food scraps and food soiled paper (paper napkins, paper towels, coffee filters, etc.) will be provided in all kitchens /breakrooms and collected for composting. Signage will clarify what materials may be deposited.
- All recyclables will be captured and contained in clear plastic bags so that contaminants can easily be spotted and removed. This will reduce contamination and allow more waste to be recycled.
- PSU does not provide bins in individual classrooms. We instead implement an "All in the Hall" approach by placing centralized midpoint recycling stations in hallways. This recognized best practice is a common strategy at universities across the country as it increases waste diversion and reduces costs. PSU's "All in the Hall" program encourages greater waste diversion by bringing people to a central location where ALL waste management options are present.

Durable Goods

Examples of durable goods include, but are not limited to, office equipment (computers, monitors, copiers, printers, scanners, and fax machines), appliances (refrigerators, dishwashers, and water coolers), furniture (systems furniture, conference tables, and guest chairs), external power adapters, and televisions and other audio-visual equipment. *Building occupants are required to place a work order for surplus pick-up for all usable and working durable goods.* If no longer usable, the following items are required to be recycled:

- **Electronic equipment** (computers, monitors, copiers, printers, scanners, and fax machines), external power adapters, and televisions and other audio-visual equipment via work order for Environmental Health + Safety (EHS):
- **Appliances** (refrigerators, dishwashers, and water coolers) via work order for EHS
- **Furniture** (systems furniture, conference tables, and guest chairs) via work order for PSU Surplus
- **All unwanted and usable office supplies should be donated to the Campus Reuse Room located in Cramer Hall, Room 180.**

Facility Alterations and Additions

Examples include, but are not limited to, building components and structures (wall studs, insulation, doors, windows); panels; attached finishing (drywall, trim, ceiling panels); carpet and other flooring material; adhesives and sealants; and paints and coatings. Mechanical, electrical, plumbing, furniture, fixtures and equipment are excluded.

- PSU maintenance staff and construction contractors working on tenant improvements as well as larger renovations on campus will be required to recycle building components and structures (wall studs, insulation, doors, windows); panels; attached finishing (drywall, trim, ceiling panels); carpet and other flooring material; adhesives and sealants; and paints and coatings.
- Old and un-repairable carpet tiles will be stored for collection by PSU's contracted hauler or carpet manufacturer where possible for recycling.
- Project Managers will work with general contractors to ensure provisions for construction waste recycling .
- All weight tickets for construction and demolition recycling should be routed to PSU's Waste Management Coordinator to track performance and identify areas for improvements.

Mercury Containing Lamps

- Per PSU's Sustainable Procurement and Life Cycle Considerations Policy, new lamps must meet the LEED credit for reduced mercury in lamps: 70 picograms per lumen-hour or less.
- When lamps are removed, the hazardous waste laboratory (managed by EHS) will collect them upon waste pickup requests made via the Facilities work order system. Lamps will then be picked up and processed by a lamp recycling agent in accordance with all State and federal requirements for managing hazardous lamps pertaining to the Universal Waste Rule.
- PSU will take advantage of manufacturer take back programs where possible.

Batteries

- Per PSU's Sustainable Procurement and Life Cycle Considerations Policy, rechargeable batteries should be purchased for standard office use.
- All departments will be provided a battery collection bucket with a dated Universal Waste sticker and instructions for submitting a work order to EHS for pickup and proper disposal.
- Batteries are picked up and processed by EHS, who ships them to various battery recycling facilities depending on the type of battery to be recycled.

Performance Metric

Currently, performance is tracked on a monthly basis using waste and recycling invoices which calculate weights based on an estimation of 150 pounds per 1 yard of waste collected from campus. Beginning in 2017, waste and recycling containers will be metered to provide more accurate weights and performance will be measured based on this data.

Goals

This solid waste management plan aims to reduce the amount of solid waste and toxins that are hauled to and disposed of in landfills or incineration facilities by encouraging the reuse and recycling of items and the composting of food scraps, where possible. The following sustainability goals are challenging, but achievable:

Ongoing-Consumables: Reuse, recycle or compost 70% of ongoing consumable items and food scraps in the total waste stream (by weight)
Durable Goods: Reuse/recycle 75% of durable goods in the total waste stream (by weight or volume)
Facility Alterations and Additions: Divert at least 70% of construction waste (by weight or volume) from facility alterations and additions
Mercury Containing Lamps: Divert 100% of all mercury containing lamps
Batteries: Divert at least 80% of all batteries

Quality Control and Assurance

To verify and assure the procedures and performance metrics of this plan are successfully implemented and achieved, the Waste Management Coordinator, within the Campus Sustainability Office, will periodically inspect waste management practices throughout the year through waste audits. These inspections include a review of how solid waste is generated, handled, and disposed; the types of materials designated for the landfill; how durable goods are removed from the ongoing consumable waste stream; and the methods used for disposing of construction waste. The Waste Management Coordinator will also track and review performance metrics at least semi-annually and the contents of this plan annually.

Responsible Party

Implementation, oversight, and the quality assurance of this Solid Waste Management Plan is the responsibility of the Campus Sustainability Office and the Waste Management Coordinator. *This Plan is effective February 1, 2017 and will be reviewed on an annual basis.*

Definitions

Comingled recycling: a system in which all paper fibers, plastics, metals, and other containers are mixed in a collection truck, instead of being sorted by the depositor into separate commodities.

Durable goods: goods with a useful life of two years or more and are replaced infrequently and/or may require capital program outlays. Examples include furniture, office equipment, appliances, external power adapters, and televisions and other audiovisual equipment.

Incinerator: a furnace or container for burning waste materials.

Landfills: waste disposal sites for solid waste from human activities.

Ongoing consumables: materials with a low cost per unit that are regularly used and replaced through the course of business. These include paper, toner cartridges, binders, batteries, and desk accessories.

Recycling: the collection, reprocessing, marketing, and use of materials that were diverted or recovered from the solid waste stream.

Reuse: when materials are returned to active use in the same or related capacity thus extending the life of materials that would otherwise be disposed. Examples of ongoing consumables that can be reused include binders, staplers, and other desk accessories, whether they are reused on-site or donated to other facilities.

Source reduction: reducing the amount of unnecessary material brought into a building. Examples include purchasing products with less packaging and that are designed with sustainability in mind.

Waste: all materials that flow from the building to final disposal. Examples include paper, grass trimmings, food scraps, and plastics. Waste refers to all materials that are capable of being diverted from the building's waste stream through waste reduction, including source reduction, recycling, and composting.

Waste diversion: a management activity that disposes of waste other than through incineration or landfilling. Examples are reuse and recycling waste.

Waste reduction: source reduction and waste diversion through reuse or recycling.

Waste reduction program: (1) the organization's commitment to minimizing waste disposal by using source reduction, reuse, and recycling; (2) assigned responsibility within the organization for implementation of the program; (3) the general actions that will be implemented to reduce waste; and (4) tracking and review procedures to monitor waste reduction and improve waste reduction performance.

Waste stream: is the overall flow of wastes from the building to a landfill, incinerator, or other disposal site.

Portland State University Waste Container Standards

Many containers and signs across Portland State University (PSU) are in need of updating to optimize waste reduction and diversion. The Campus Sustainability Office (CSO) aims to modernize and standardize university waste management systems from containers and signs to processes and programs. Several guiding principles inform our approach:

Consistency: Building occupants should be presented with the same waste management options throughout campus.

Consolidation: Right-sizing and centralizing our infrastructure is key to an effective, affordable, and user friendly waste management system.

Accessibility: Every landfill bound trash bin should be paired with diverse recycling options. Most of the waste we produce can be diverted from the landfill and recycling should be as accessible to building occupants as possible.

Permanence: Our waste management system, including containers, should communicate a lasting university commitment to waste reduction.

Safety: Containers should be safe to operate, service, and maintain.

Preparedness: Standardized containers enable architects, project managers, and design teams to anticipate space needs for waste receptacles and integrate them into the design of the building and reduce unexpected challenges.

Flexibility: Containers should be moveable to maximize effectiveness and adaptable to respond to changing markets or community needs.

Kitchens, Breakrooms, Study Lounges, Lobbies, Hallways, and Corridors

CLEANRIVER MIDPOINT RECYCLING STATIONS

Midpoint tri-sorting waste collection stations are the approved waste receptacles for hallways within student centered buildings such as classroom buildings, Smith Memorial Student Union, and Viking Pavilion. They are also the approved standard for other common areas such as kitchens, break rooms, lobbies, and study lounges. Midpoints provide a centralized, convenient, flexible, and uniform system for waste management. Distinct sections of the station can be customized and are adaptable to changing markets or community needs. The entire unit can be moved if needed and is easily serviced and maintained. The Waste Management Coordinator within CSO coordinates procurement of Midpoint waste stations to ensure compliance. Built-in waste systems are not permitted due to the inflexibility they create.



Midpoint Recycling Station – Specifications:
Dimensions: 41.25" x 18.00" x 37" x 51.00", Weight: 185 lbs.
3 streams – Landfill, Commingled Recycling, and Glass
Manufactured with 97% recycled material

MIDPOINT RECYCLING STATION OPTIONS

Midpoint Tri-sort Waste Station for Kitchens, Breakrooms, and Lobbies

Model	No. of Streams	Dimensions	Weight	Price
IMSF-3 Flat Backboard	3	41.25”W x 23.5”D x 37.75”/58”H	185 lbs.	$
Position	**Stream**	**Opening Shape**	**Capacity**	**Bag Liner Size**
1	Landfill	Square	22 Gallons	32” x 43”
2	Mixed Recycling	Square	22 Gallons	32” x 43”
3	Glass	Round w/ Baffle	22 Gallons	32” x 43”

Midpoint Tri-sort Waste Station for Building Hallways and Corridors

Model	No. of Streams	Dimensions	Weight	Price
IMSF-3 Flat Backboard	3	46”W x 23.5”D x 37.75”/58”H	195 lbs.	$
Position	**Stream**	**Opening Shape**	**Capacity**	**Bag Liner Size**
1	Landfill	Square	22 Gallons	32” x 43”
2	Mixed Recycling	Square	36 Gallons	40” x 48”
3	Glass	Round w/ Baffle	22 Gallons	32” x 43”

Midpoint Quad-sort Waste Station for Congregation Areas and Student Lounges

Model	No. of Streams	Dimensions	Weight	Price
IMSF-4 Flat Backboard	4	55”W x 23.5”D x 37.75”/58”H	220 lbs.	$
Position	**Stream**	**Opening Shape**	**Capacity**	**Bag Liner Size**
1	Landfill	Square	22 Gallons	32” x 43”
2	Mixed Recycling	Square	22 Gallons	32” x 43”
3	Compost	Oval	22 Gallons	32” x 43”
4	Glass	Round w/ Baffle	22 Gallons	32” x 43”

Midpoint waste stations are designed for easy servicing; the unit has front opening doors and rigid liners. Heavy duty casters allow the unit to be moved for cleaning or repositioning. Color coded compartments and top plates standardize your facility wide program.

Midpoint Recycling Station – Signage:

CSO creates and approves signage for ALL waste containers, including Midpoint waste stations. CSO may choose to update or change signage over time due to changing markets, rules, or community needs. The signage used across campus is an amalgamation of institutional best practices, contractual requirements, and refinement over time, so any proposed changes should be sent to the waste management coordinator in CSO for review and approval to ensure all needs and requirements are being met.





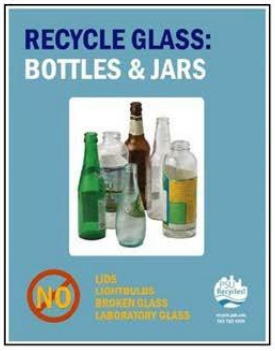

Kitchens, Breakrooms, Study Lounges, and Approved Public Spaces

SIMPLEHUMAN COMPOST CANS

33% (by weight) of landfill-bound waste on campus consists of food waste and compostable fibers such as napkins, coffee filters, tea bags, and paper plates. Food waste not only takes up valuable space in the already overtaxed landfill but it also emits the potent greenhouse gas, methane, as it decays. When composted, food waste becomes a beneficial soil amendment. PSU is committed to both food waste reduction and composting. Stainless steel, SimpleHuman containers with lids and push pedals are the standard compost container for kitchenettes and breakrooms, as well as most public spaces on campus.

38-Liter (10-Gallon)
SimpleHuman Step Waste Cans
Specifications:

Dimensions: 12.5”D x 15.8”W x 25.9”H
Weight 14.3 lbs.
Brushed stainless steel with finger-proof coating
Strong steel pedal
Dent-proof lid has shocks technology for a smooth, silent close
Internal hinge allows for placement right up against the wall
Estimated price (2017) - $ 99.99





Residence Halls

PORTLAND COMPOSTS! PAILS*

Sure-Close Kitchen Composter – Specifications:



Dimensions: 9”D x 11”W x 9.5”H
Weight 1.1 lbs.
HDPE plastic includes recycled content, UV protected
Dishwasher safe and compostable bag liner ready
Easy fit under sink, cupboard, countertop or in a corner
Hinged lid that clicks open and swinging handle with lip grip, bottom grip and back grip
Inside is smooth and easy to clean with patented airflow channels and microperforated lid that seals out fruit flies and insects, reduces smells with aeration

HOUSING RECYCLING BIN*

Rehrig Pacific Company 6-Gallon Apartment Recyclers – Specifications:



Dimensions: 13”D x 12”W x 13”H
Weight 2.2 lbs.
Made with durable, washable, 100% recyclable, high density poly-ethylene (HDPE) resin

**PSU’s Housing & Residence Life (HRL) provides housing recycling and compost bins. HRL charges students for bins if not left in the room when moving out.*

Shared and Individual Offices – Desk Side Containers

BUSCH SYSTEMS BUDDY BINS

Most of the waste created in an office setting is recyclable. Using a trash/recycling buddy system for waste collection is the most effective way to increase capture of recyclable materials generated in offices. By pairing all trash bins with a larger recycling bin, it is more convenient for users to dispose of waste properly. Similar to PSU’s “All in the Hall” program regarding classrooms, PSU DOES NOT service individual, deskside trash cans. Building occupants are responsible for emptying their own trash and recycling containers into centralized collection containers. These designated centralized collection points are then serviced by custodians. CSO recommends one of two different options when setting up desk-side waste collection in offices.

Busch Systems Recycling & Hanging Waste Bin
Specifications:



14-quart (3.5 gallon) blue recycling bin and smaller (0.75 gallons) hanging trash bin
Dimensions: 11.5”D x 7.9”W x 12”H
Weight: 1.05 lbs.

CITY OF PORTLAND SUSTAINABILITY AT WORK

Deskside Recycling Box:

The Campus Sustainability office can provide these for building occupants. Individuals would still have to acquire their own trash can if one is desired, but the recycling deskside box is provided free of cost from the City of Portland. You can contact PSU Recycles at 503-725-4300 or through e-mail recycles@pdx.edu to request a deskside cardboard recycling box for your office.



Printer and Copier Areas

BUSCH SYSTEMS SLIM JIMS

The Campus Sustainability Office recommends one of two different options when setting up paper recycling collection in printer/copier/fax areas:

Busch Systems Waste Watcher Recycling Bin – Specifications:

Dimensions: 20"D x 11"W x 30"H
Weight: 6.75 lbs. (7.65 lbs. with lid)
23-Gallon capacity (also available in 16- and 20- gallon containers
Lid Specification: Mixed (Saturn Style) container lid with 5" diameter circle inside a slot that 16 ¼" D x 1 3/4" W



CITY OF PORTLAND SUSTAINABILITY AT WORK

Cardboard Central Collection Container

Dimensions: 18"D x 12"W x 26'H

You can contact PSU Recycles at 503-725-4300 or through e-mail recycles@pdx.edu to request the central collection cardboard recycling box for your office.



Outdoor Spaces: Plazas, Entrances, Walkways, Parking Garages, etc.

STREETSCAPE OUTDOOR RECYCLING / GARBAGE RECEPTACLE WITH RAIN HOOD

Portland State aims to pair all outdoor garbage cans with recycling containers with landfill-bound waste receptacles is one small step to assisting with university sustainability goals and increasing opportunities for our campus community to recycle no matter where they are on campus.

Recycleaway Streetscape 36-gallon Recycling Receptacle with Rain Hood – Specifications:

Dimensions: 26”D x 42”H, Weight: 145 lbs., 35.5 gallon capacity
Recycle Blue gloss finish, Garbage Black gloss finish
Weather resistant EXL-COAT powder coat finish is durable enough for any climate
1.5" wide x 3/16" thick welded steel bars
Bottom consists of steel channels so unit can be secured to the ground if desired
Adjustable leveling glides keep unit stable on uneven surfaces
Lid is secured to unit with plastic coated steel cable to prevent vandalism
Color matched removable LLDPE plastic liner with lift openings meets UL94 Flammability Standard
Made in the USA
Estimated price (2017) Recycling - $ 999.99, Garbage - $ 939.99





Temporary Roll-off Containers

The following images serve as a size and planning reference for PSU staff needing large temporary waste containers. These containers are delivered and serviced by our waste hauler. Need a large temporary trash dumpster? Feel free to e-mail recycles@pdx.edu or call 503-725-4300 for assistance from one of our waste management specialists.

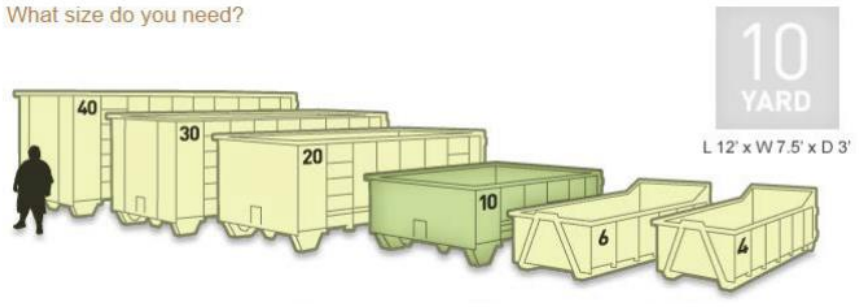

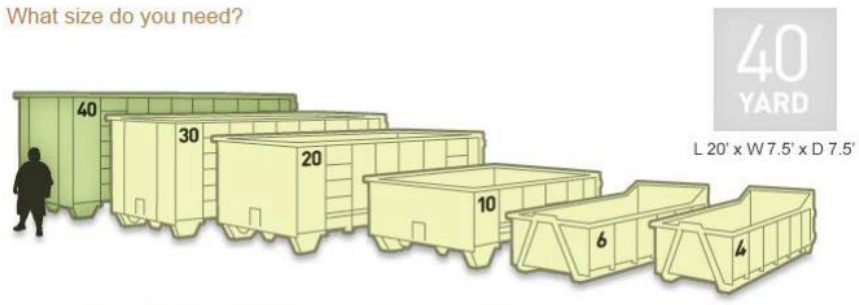

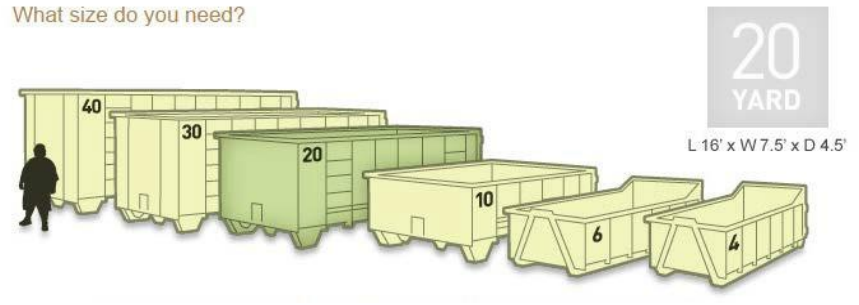

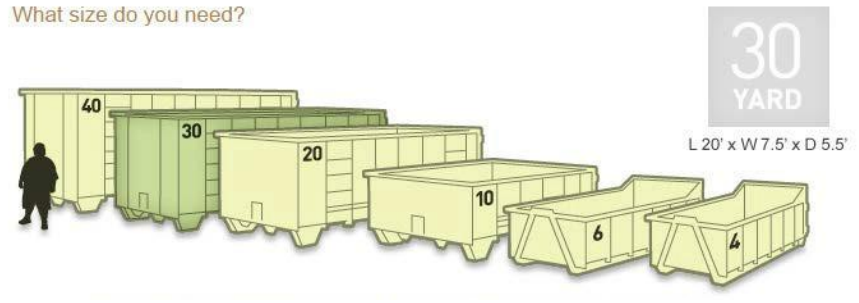

Roll-off Vehicle Configuration

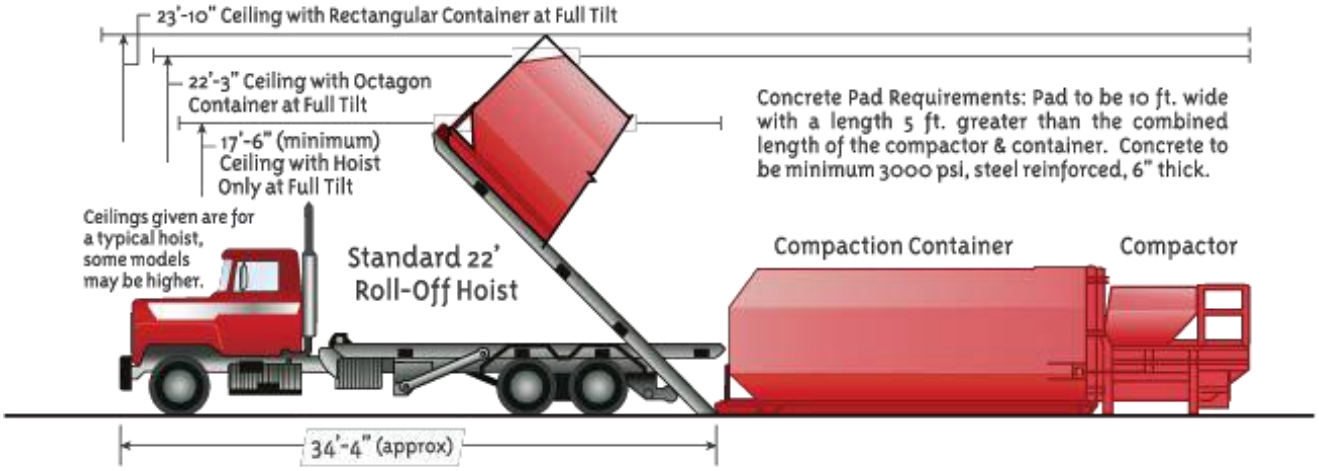

Front end load vehicle configuration

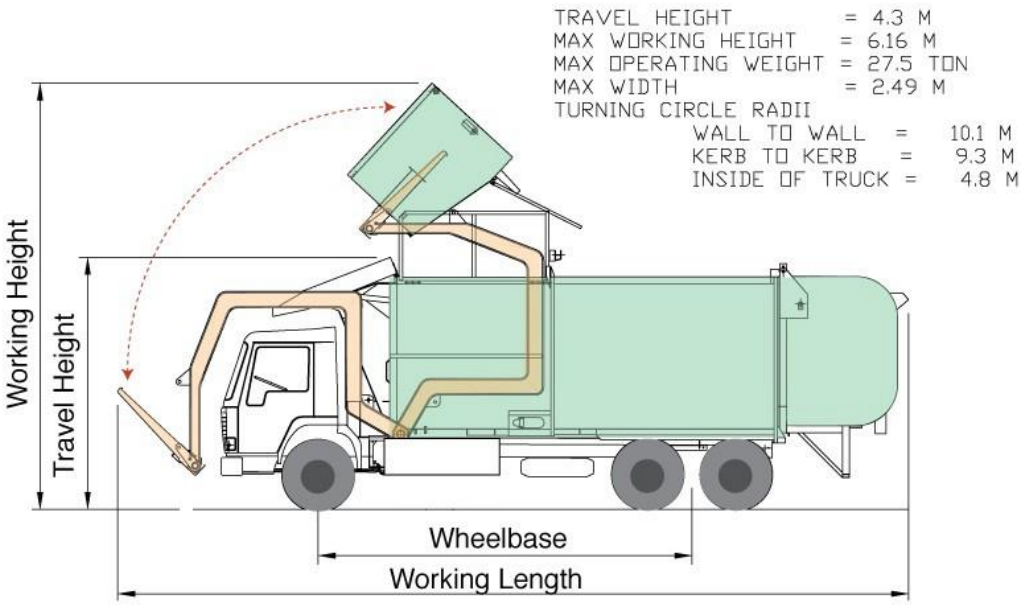

Concrete Pad Requirements

Pad to be 10 feet wide with a length of 5 feet greater than the combined length of the compactor and container. The concrete should be a minimum of 3000 psi, steel reinforced, and 6" thick

APPENDIX: Outdated Containers Found on Campus - No Longer Purchased

Office Style Bins
GeoCube Recycling Containers
Witt Industries





Curbside/Curby:
Used throughout the Metro area for residential glass recycling



Dome Top Can
Used for garbage in public spaces



Ribbed Bullet
blue steel recycling can
Witt Industries



Commingle "Candy"
blue steel recycling Canables®
Windsor Barrel Works





Warriors:
Stations with locking doors



Portland State University

Signage & Wayfinding Standards



September 12th, 2025

Prepared By:
Ernest Tipton, Architect
Campus Planning Office

For More Information:
Jason Franklin, Director of Campus Planning Office
503-725-2031
Jason.Franklin@pdx.edu

Section I: Introduction

Background 1
The Purpose 2
The Process 3
Where the Standards Apply 5

Section II: Signage & Wayfinding Review

PSU Internal Signage Approval Process 6
Procurement & Installations 6
Jurisdictional Signage Requirements 7
Non-conformance 7

Section III: Design Criteria

Fundamental Design Concepts 8
PSU Identity & Branding 8
PSU Signage & Wayfinding Elements 8
Exterior Signage & Wayfinding 13
Interior Signage & Wayfinding 15

Section IV: Appendices

IV- 1: Definition of Terms 17
IV- 2: Naming and Room Numbering Policy 20
IV- 3: Artistic Display Policy 21
IV- 4: Building Entrance Signage Requirements 22
IV- 5: Retail Signage Requirements 23
IV- 6: `A' Frame Sign Policy 24
IV- 7: Chalking and Notice Posting Policy 26
IV- 8: Signage & Wayfinding Technical Specifications 27
IV- 9: References & Precedence 28
IV- 10: Standard Signage Templates 29

Section I: Introduction

Background

Portland State University (PSU) is an urban research and teaching university located in downtown Portland, Oregon. Founded in 1946, the University's campus continues to grow through a mix of building expansions, acquisitions, new construction and leased space. The University prides itself on being seamlessly woven into the downtown urban fabric, while striving to provide a unique collegiate sense of place.

The 49-acre campus is dispersed across more than 50 city blocks. It's 54 downtown building locations range from adaptive reuse of historic residences to modern mid-rise multi-owner developments and space leased in non-PSU buildings. The buildings are of various eras and styles reflecting the evolution of the built urban context over time.

Our Vision: *Portland State University leads the way to an equitable and sustainable future through academic excellence, urban engagement, and expanding opportunity for all.*

Portland State University has never been a traditional campus. In 2016, Portland State University adopted a new strategic plan. The over-arching commitment of the plan embraces the power of diversity, promoting access, equity and inclusion. A significant number of PSU's students are from historically marginalized and underrepresented groups. Many are first generation students, and two-thirds transfer in from other institutions. The campus needs to reflect an easily perceivable and welcoming atmosphere that elevates PSU's reputation as a premier academic institution.

Decentralization of Oregon's public university system and establishment of it's own Board of Trustees has given PSU greater independence and greater responsibility in determining it's policies, practices and physical form. Initiatives of the 2016, Strategic Plan established goals of fostering sustainable practices, providing the infrastructure for rapid emergency response, avoiding redundancy in campus systems and controlling costs.

The Purpose

Signage & Wayfinding Standards play a key role in supporting the mission and strategic Initiatives of the University. Portland State University is integrated into a dense urban environment; Signage & Wayfinding Standards reinforce a sense of place and provide a thread of visual continuity to identify, inform and guide people to exterior and interior destinations. They provide memorable graphics that cohesively reinforce PSU's branding and supports universal accessibility.

Marketers and designers are well aware of the importance that consistent well designed signage plays in recognition, public perception and mass communication.

The following Signage and Wayfinding goals are designed to reinforce an appealing campus that inspires, reduces confusion and creates a sense of place.

Goals of the Signage and Wayfinding Standards:

- *Present a consistent University identity*
- *Integrate with the current and future campus context*
- *Provide a uniform and "viewer friendly" hierarchy of elements*
- *Use simple, clear and legible communication*
- *Minimize visual clutter and distraction*
- *Support barrier-free campus accessibility*
- *Provide appropriate day and evening legibility*
- *Comply with Jurisdictional requirements*
- *Provide economy and adaptability*
- *Support the use of sustainable products, materials & practices*

The Process

The PSU Campus Planning Office initiated and facilitated the development of these Signage and Wayfinding Standards. The standards merge the signage policies and procedures of numerous campus documents and supports PSU's 2016 strategic initiatives. Existing signage and wayfinding policies, standards and proto-typical signs and symbols were reviewed and incorporated to the greatest extend possible, while adhering to the goals of this document.

A field review and inventory of existing signage and wayfinding elements was performed. The inventory focused on items installed over the past 15-years and the commonalities in proportions, materials, and graphics that currently exist.





Building Name Signs

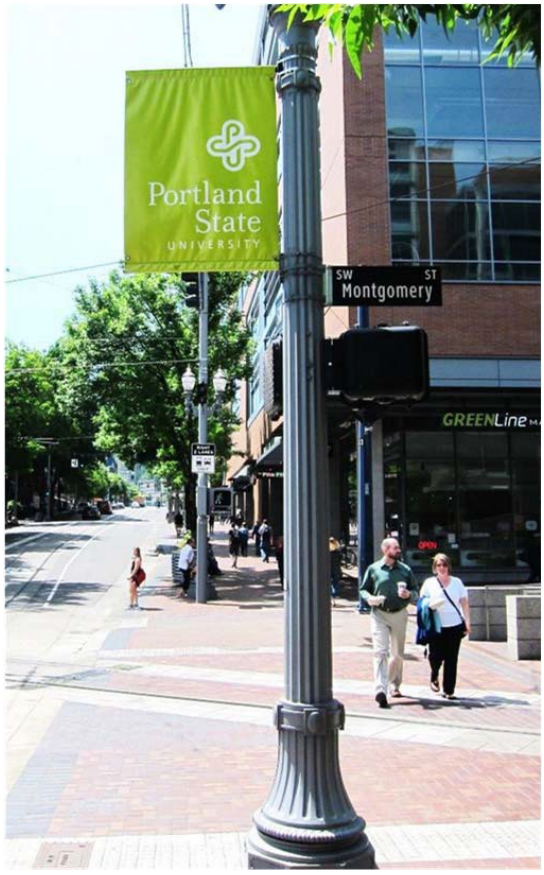

District Identity Banners



Campus Gateway Monuments
(Old Font Style)



Donor Monuments
(New Font Style)

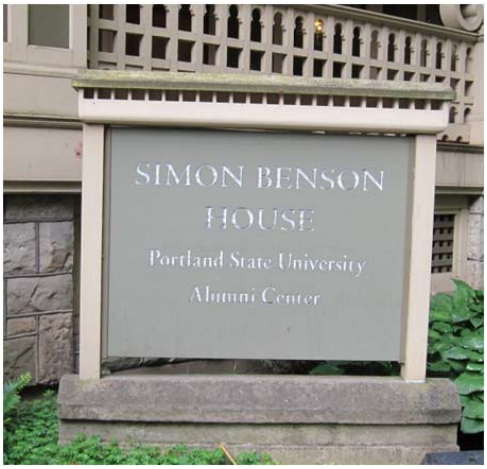

Historic Building Identifiers



Wayfinding Kiosks



Campus Identity Wall Sign

Precedence research was performed reviewing the signage and wayfinding masterplans and standards of various universities. It included examining the signage hierarchies developed by other institutions and the signage types, proportions and scales used at other urban campuses.

Staff reviewed various literatures on signage systems, signage and wayfinding design, and cognitive recognition. The review included the requirements of the city of Portland Sign Code (Title 32), the city of Portland Zoning Code (Title 33), The 2014 Oregon Specialty Code and the Department of Justice 2010 ADA Standards for Accessible Design.

Where these Standards Apply

To achieve the established goals, it is important that all signage associated with PSU properties, buildings and facilities conform to these Signage & Wayfinding Standards. Therefore, these Signage & Wayfinding Standards apply to all new and replacement signage and wayfinding at PSU.

These standards are to be used by all PSU consultants, designers, contractors, fabricators, tenants, departments, student organizations and other individuals proposing permanent or temporary signage or wayfinding at PSU.

Section II: Signage & Wayfinding Review

PSU Signage Approval Process

These Signage and Wayfinding Standards are designed to meet typical campus conditions. The Prescriptive Method provides sign templates that are pre-approved for use. Conditions will inevitably arise where it is not possible to specify signage using the Prescriptive Method, or a new or unique type of signage is required. Unique signage is approved through a subjective method of approval. While the PSU Signage Approval Process strives to approve University signage that it believes can meet jurisdictional requirements, internal approval doesn't guarantee approval by the City of Portland.

Prescriptive Method – The appendices provides standard graphic requirements, symbols, and signage templates approved for use at PSU.

Subjective Method – Proposed signage that does not confirm to the prescriptive requirements is approved by the Campus Planning Office. Materials should be submitted to the PSU Signage Coordinator in the office of Capital Projects & Construction (CPC). If it is determined that the proposed signage can not be accomplished using the pre-approved signage templates, the CPC Signage Coordinator will submit the proposed signage to the Campus Planning Office for review. In consultation with CPC staff, the Campus Planning Office may reject, approve with changes, or approve the proposed signage.

Procurement & Installations

All requests for signage are to be submitted through the CPC Signage Shop. The preferred submission method is through the online Work Order System, at:

http://www.pdx.edu/facilities/

All signage procurement and installation is to be managed by CPC. The CPC Signage Coordinator will determine if all or portions of the proposed signage package meet the prescriptive criteria. The PSU Signage Coordinator may assist the applicant in modifying the signage to conform to the prescriptive criteria. If all or portions of the proposed signage does not meet the prescriptive criteria, the Signage Coordinator will forward the signage to the Campus Planning Office for review and notify the applicant.

Jurisdictional Signage Requirements

All signage and wayfinding must conform to the Americans with Disabilities Act, the most current edition of the Oregon Specialty Code and the City of Portland Signage Code. Exterior signage and wayfinding installations may require zoning approval and permits from the City of Portland. Once approved internally, CPO and CPC will manage required jurisdictional reviews and the obtaining of required permits. Signage installed without jurisdictional approval and required permits may be removed by PSU Facilities and Property Management at the responsible party's expense.

Non-conformance

To support implementation of these standards, nonconforming or unapproved signs, banners, notices or other related materials may be removed by PSU Facilities and Property Management at the responsible departments expense. Under no circumstances are unapproved signage or wayfinding materials to be independently ordered or installed by departments, without prior written approval by the Director of the Campus Planning Office.

Section III: Design Criteria

Fundamental Design Concepts

Communication is implicit in signage and wayfinding. It is important to provide clear, concise and consistent graphics that reinforces PSU's identity while informing and directing. These fundamental design criteria provide the basic framework for the design of signage and wayfinding materials for use on the PSU campus. Definitions of terms used in these Signage and Wayfinding Standards are available in Section IV-1.

PSU Identity and Branding

The Portland State University Identity Standards are maintained by University Communications. They provide the required graphic framework for communicating the identity and branding of PSU. The graphic standards provide consistent messaging formats to promote PSU's reputation and recognition. Changes to the PSU Logo mark, Brand Identity logotypes and format structures shown below are prohibited. The full PSU Identity Standards are available at the following website:

http://www.pdx.edu/university-communications/sites/www.pdx.edu.university-communications/files/PSUStandards9-11Sm.pdf







PSU Signage and Wayfinding Elements

Colors - The following finish colors are approved for use in the design and fabrication of PSU Signage and Wayfinding materials. The use of other colors may be approved through the subjective review process.

(0,0,0,100)	(40,0,100,38)	(23,2,98,12)	(0,0,0,20)	Equal to 20% CG	(0,0,0,0)
Black	**PSU Green**	**Accent Green**	**20% Cool Grey**	**Brushed Aluminum**	**White**

COLOR	C,M,Y,K	Black	Purple	Blue	PSU Green	Red	Orange	Grey	Yellow	White
Black	0,0,0,100		22	25	36	68	**78**	**79**	**95**	**96**
Purple	48,100,0,40	22		27	30	42	74	**75**	**85**	**88**
Blue	95,10,1,25	25	27		28	38	70	72	**84**	**86**
PSU Green	40,0,100,38	36	30	28		32	45	65	**77**	**79**
Red	0,100,100,0	68	42	38	32		38	60	72	**78**
Orange	0,60,100,0	**78**	74	70	45	38		58	61	68
20% CL Grey	0,0,0,20	**79**	**75**	72	65	60	58		19	20
Yellow	0,0,100,0	**95**	**85**	**84**	**77**	72	61	19		18
White	0,0,0,0	**96**	**88**	**86**	**79**	**78**	68	20	18	

Figure 1 Table of percentage contrast of colors.

Color Differential – The foreground and background color differential is to be not less then 75% at a 75 foot-candle lighting level .

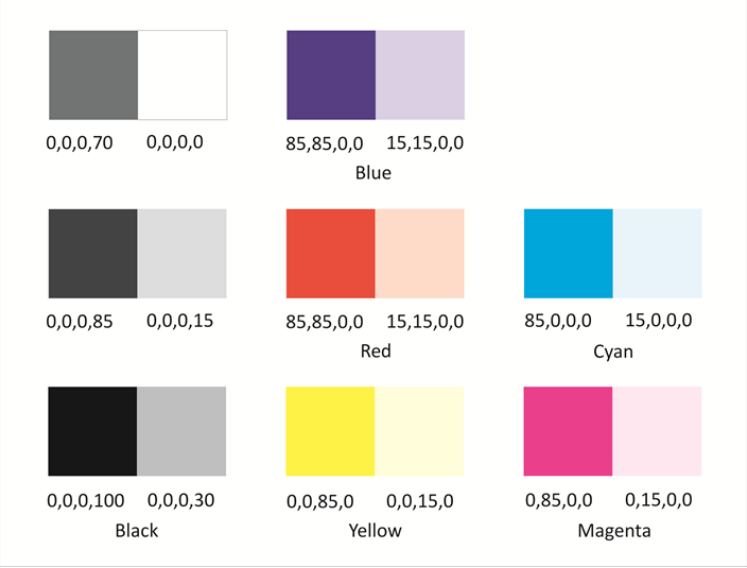

Figure 2 Example of standard spot colors with 70 percent contrast.

Contrast : The foreground and background saturation contrast level is to be not less then 70% at a 75 foot-candle lighting level .

Font Type : The PSU Brand Identity logotypes consists of two font styles. These font styles are to be used exclusively for the Brand identity logotypes.

“Portland State”	“UNIVERSITY”
Adobe Garamond Pro Regular (serf)	Frutiger Roman (sans serif)

The font style to be used for all other signage text is to be upper case FRUTIGER ROMAN (sans serif), modified as required to comply with the characteristics that follow.

A B C D E F G H I J K L M N O P Q R S T U V W X Y Z

1 2 3 4 5 6 7 8 9 0

Stroke Thickness : 10% - 15%

Character Spacing : 3.6 to 4 times the stroke thickness and 1/8” minimum.

Line Spacing : 45% to 60%

Edge Buffer and Word Spacing : 1 to 4 time the font cap height.

Braille : Provide braille at the bottom of all interior room signs and code required identification signs including; elevators, restrooms and ADA accommodating stations and devices, conforming to Section 703.3 of the ADA Standards for Accessible Design.

Pictogram and Symbol Height : 6 inch minimum to 10 inch maximum.

Font Size – Numerous factors impact the minimum font size required for signage legibility including; viewing distance and angle, lighting, height above ground and viewing speed. Signage fonts should be the minimum size practical for the conditions and intended use. The minimum font size, without subjective approval is 5/8 inch.

The PSU campus is a multi-modal pedestrian district with a 400ft by 400ft block grid and 60ft wide streets. The design automobile and transit speeds for signage purposes is 30mph (44ft per second). Signage and wayfinding is to be predominantly designed for pedestrian viewing. The following graph provides the capital height size window for design viewing distances on the PSU campus.

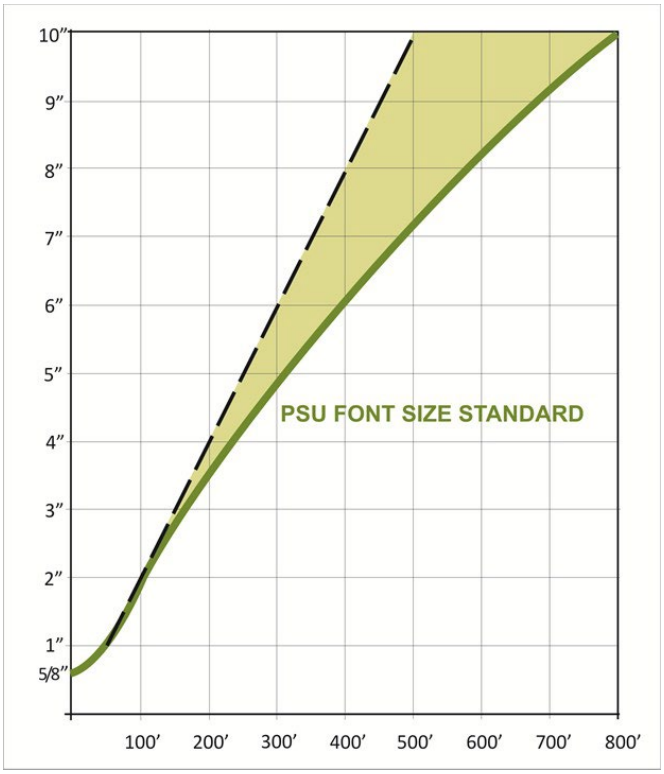

Figure 3 Standard Cap Height Window for PSU Signage Fonts

Automobile oriented signage is based on a viewing distance of 120ft to 500ft. The readable font size for moving traffic should be between 10 inches and 2 ½ inches to allow for readability and response time, depending on the distance and purpose of the text. The parking symbol to identify garage entries should be perpendicular to traffic and 12 inches high.

Exterior pedestrian oriented signage is based on a typical viewing distance of 60ft to 400ft. The font size shall be between 8 inch and 2 inches. Building name signs are to be 6 inches minimum and 8 inches maximum in height.

The viewing design distance for building interiors range from 10ft wide to 200ft. The interior signage font size shall be between 4 inches and 5/8 inch.

Materials : The dimensionality, texture and finish of materials have been selected to work with the PSU color palette to create a hieratical signage family. The primary materials include the following:

Polished Bronze Letters on Charcoal Granite
Painted Wood
Fabric
Stainless Steel Cut Letters with Brush Finish
Anodized Aluminum with Clear Satin finish
Pressure Sensitive Vinyl on Glass (White)
Solid Color Photopolymer Plastic (White on Black)
Non-glare matte clear Acrylic
5.1Mil matt inkjet paper (Black text on PSU Accent Green)
20% Grey Vinyl Wrap

Lighting : Back lighting or directional spot lighting of exterior signage and wayfinding kiosks is encouraged when the light level at the sign face would be less than 5 foot candles anytime during the standard PSU instructional grid (7 a.m. – 10 p.m.). It is recommended that signage and kiosks be illuminated to an average minimum of 10 foot candles and a maximum of 30 foot candles.

Exterior Signage

The exterior signage concept is based on the following functional hierarchy and elements. Standard exterior signage polices and templates are provided in the appendices.

Identity Signage provides a sense of place physically and historically.

Pole Banners

Street poles throughout the University District

Wall Banners

The south wall of the Distance Learning Center is a permanently approved banner location. Other temporary banner locations are subject to approval through the PSU signage subjective review process and the City of Portland.

Logo mark and logo type wall signs

On various PSU owned buildings

Historic Gateway Monuments

North and south end of the Park Blocks, and the Harrison Street Bridge on Broadway

Historic Building Identity

Simon Benson House and Helen Gordon Child Development Center.

Directional Signage provides wayfinding for people unfamiliar with the campus.

Map & Directory Kiosks

At all primary arrival points including; North end of the Park Blocks, the Urban Plaza and campus parking facilities.

Orientation Signage identifies key buildings and elements, allowing people to physically perceive their location and cognitively map their destination.

PSU Building Name and Address

At all main building entries, facing the public street and other public building entries when possible. See Building Entry Signage Requirements.

Retail Tenant Name and Address

Above all retail frontages facing the public street and other retail entries as approved. See Retail Signage Requirements.

Parking Entry Identification

Includes flag type sign located above each garage entry, standard or electronic reader board signage adjacent to the garage entry and primary map and directory on each floor, at or in close proximity to main pedestrian entrances and building elevators.

Informational Signage provides public information about the campus conditions, culture and usage.

Regulatory Signage

Unless otherwise indicated here in, all no smoking/ vaping, no wading, no skateboarding, and other regulatory signage located throughout the campus are to be pre- approved by the Campus Planning Office.

Public Notice & Message Kiosk

In Harrison Street breezeway. All other exterior flyer and notice posting must be pre-approved . See Chalking and Posting Policy.

State, Regional and Local Art Identification

Various locations, adjacent to public works of art. Content, design and location are to be submitted through the Campus Planning Office for review.

Dedication Plaques & Monuments

Various pre-approved locations.

Interpretive Signs

Various pre-approved locations.

Other Signage related materials that support the University's mission and initiatives.

Murals, Super-graphics and Scrims

Provided throughout the campus to strategically delineate unique paths and places. Submitted through the Campus Planning Office for review. See Artistic Display Policy.

Temporary Construction Project Information Signs & Banners

Limited to on and behind construction fencing.

`A' Frame Advertisement

Various temporary locations. See A-frame Policy.

Chalking

Various temporary locations. See Chalking and Posting Policy.

Interior Signage

The interior signage concept is based on the following functional hierarchy and elements. Standard interior signage templates are provided in the appendices.

***Donor Signage** provides a place for recognizing the role of philanthropy in providing academic space.*

Contributor Dedication Plaques

On ground level, in the main building lobby.

Room Dedication Naming

Located in the transom area above the main entry door to the dedicated room. If insufficient space is available above the door, the sign should be located on the strike side of the main entry door.

***Orientation Signage** identifies places within the building, allowing people to physically perceive their location and cognitively map their destination.*

Department Identification

Located above or on the strike side of the main entry door.

Elevator Floor Identification

Floor identification and fire stair use signs located at each floor on the elevator frame and adjacent to the call button, as required by the current edition of the Oregon Structural Specialty Code and the ADA Standards for Accessible Design.

Stair Identification

Face and flag sign located on each floor at entries to stairs.

Stair floor identification located in stairwells at each floor landing.

Common Facilities Identification

Flag and face signs at all restrooms, drinking fountains and other

Instructional Room Identification

Identification and notice posting strips at all instructional lecture halls, classrooms, and labs.

Other Room Identification

At the entry to all offices, janitorial, electrical & mechanical rooms.

***Directional Signage** provides wayfinding for people unfamiliar with the campus.*

Primary Map & Directory

On each floor, at or in close proximity to main entrances and building elevators.

Fire Exit Maps

On each floor, adjacent to primary map and various other locations as required by the Campus Planning Office and the Fire Marshal.

Direction Signs

On each floor, at public corridor intersections.

The location and design of super-graphic directional signage may be requested through the subjective review process.

***Informational Signage** provides public information about the campus conditions, culture and usage.*

Building LEED Certification Plaques

Etched glass or metal plaque is to be mounted in the main public lobby on the primary building entry level.

Electronic Reader Boards

A maximum of one per floor in public areas, unless otherwise approved by the Campus Planning Office and the Building Advisory Committee. The location is to be approved by the Campus Planning Office.

Message Tack Boards

Message clip strips are to be located adjacent to the primary entry of all instructional spaces. A minimum of one 6'x4' message tack board or writable surface is to be located on each floor, preferably at lobbies, student lounges, or other gathering places. See Chalking and Posting Policy.

Information Signs

Other informational signage types and locations are to be approved by the

***Other Signage** related materials that support the University's mission and initiatives.*

Murals & State Art Identification

Content, design and location are to be submitted through the Campus Planning Office for review.

Section IV: Appendices

IV-1: Definition of Terms

Advertisement
Refers to the promoting for profit of services or products.

`A' Frame Sign
Any free-standing or portable information, directional or graphic sign including `A-board' and `Sandwich Board' type signs.

Brand Identity
The visual representation of PSU's trademark designed to create a memorable image and distinctive set of expectations in the mind of public.

Braille
Braille is contracted (Grade 2) conforming to the layout measurements of the 2010 ADA Standards for Accessible Design.

Cap Height
The height of the capital letter `I' of a given font style.

Chalking
The writing or drawing of messages or images with chalk on or in any university grounds, buildings, or facilities.

Clear Space
The buffer space around the PSU logo and between graphics and the outer edge of the background presentation surface.

CMYK
The acronym for a four hue base mixing palate used in graphic design and printing;representing the colors Cyan, Megenta, Yellow and Black in individual saturation mixing values ranging from 0 – 100.

Color (Hue) Differential

Colors have different degrees of reflectance measured as a percentage of pure white, which is 100%. The color differential refers to the percentage separation between the reflectance of colors. The greater the color differential, the greater the ability to distinguish the edge between colors.

Contrast

Refers to the difference in reflectance of a given color between dark and light as a result of color saturation (Value). The greater the saturation contrast the greater the ability to distinguish the edge between colors of the same hue with different values.

Edge Buffer and Word Spacing

The white space to be provided on all sides of the logo, between the text and sign edge and between words.

Font

The unique stylistic form of a set of characters used to communicate information.

Line Spacing

The distance between the bottom of the letter `I' and the top of the letter `I' of a given font style, measured as a percentage of the cap height.

Logo

The distinctive, proprietary symbol used to identify PSU.

Mural

A painting, mosaic or bas-relief original art work that is applied directly to a wall. Exterior murals less than 32 square feet constitute signs.

Pictograms and Symbols

Internationally recognized system of pictorial and symbolic vocabulary and phrases. Pictograms and symbols are to conform to the 2010 ADA Standards for Accessible Design, the 2014 Oregon Specialty Code and the International Pictograms Standard.

Point
A unit of measure for fonts, equal to 1/72 of an inch or .35mm.

Posting
The posting of flyers, brochures, posters, leaflets or similar items in or on any university buildings, facilities or grounds.

San Serif
A style of font that does not have a serf at the end of the characters.

Serif
Any of the short lines stemming from, and at right angles to, the upper and lower ends of a character.

Stoke Thickness
The width of the capital letter `I' of a given font style as a proportional relationship to the cap height.

IV-2: Naming and Room Numbering Policy

All building names for signage purposes are provided through the Campus Planning Office, upon approval by the President.

Department names for signage purposes are determined by various sources and must be coordinated with the Campus Planning Office prior to signage fabrication.

The Campus Planning Office and the PSU Foundation must approve Wording and placement of donor boards, dedication plaques and room dedication signage prior to ordering or fabrication.

All space and room numbers are to be assigned by the Campus Planning Office. At no time are space or room numbers to be assigned or changed by consultants or other university personnel. All space numbers should be indicated on the plans exactly as they are assigned. Signage installed with numbering not assigned by the Campus Planning Office will be corrected at the expense of the incorrect signage installer.

Elevator numbers are assigned by Facilities and Property Management based on the university's elevator state permit log.

Addition information regarding PSU's naming and room numbering policy can be found in the Campus Planning Office, Space Allocation & Management Policies & Procedures Manual.

IV-3: Artistic Display Policy

Applicability:
This policy addresses the exterior and interior use of murals, super-graphics, scrims and other artistic content on the PSU campus.

General requirements:
All artistic displays (2 and 3 dimensional) must be submitted for review through the Campus Planning Office. Murals and art installations require pre-approved by the PSU Art and Temporary Installation Committee though the Subjective Review process. The City of Portland and the Regional Arts and Culture Council regulates and permits the exterior installation of murals, super-graphics, scrims and art work, which will be coordinated through the Campus Planning Office. Subjective Review approval is subject to jurisdictional approval.

Murals: Appropriately used, murals provide a vibrant urban and learning environment and wayfinding ques, without creating visual clutter. Murals are not to be used for commercial advertising and should not compete within a space. They should be thematic in content and of a scale appropriate to the surface and viewing distance. Murals are to be of material durability for the intended installation duration and maintained throughout the installation. Subject to approval, murals may be installed on interior and exterior PSU building walls including lobbies, lounges, corridors and stairwells.

Super-graphics:

Scrims:

Works of Art: Current PSU students, faculty and staff may commission, donate, display and temporarily install works of art on the PSU campus, subject to pre-approval by the PSU Art and Temporary Installation Committee. Further information is available at: https://www.pdx.edu/pcre/temporary-installations-commissioned-and-donated-art

IV-4: Building Entry Signage Requirements

Building entry signage requirements refer to entryways used to enter and exit PSU buildings and do not include loading docks or garage entrances.

Building entrances are divided into two categories; main entrances and side entrances.

An entrance signage layout for main entrances is provided on page X and page X for side entrances. As PSU has an eclectic mix of buildings that differ in age, architectural style, and building materials, following these layouts verbatim is not required; however, a specific set of signage elements is required. The provided layouts should be followed to the best of the entryway's ability.

Entry signage location, elements, and layout must be pre-approved by the Campus Planning Office.

Main Entrances must include the following elements:
Building address (e.g. 506 SW 3rd St.) in the following format
Number: numeric digits (eg. 506)
Direction (if applicable): abbreviated letter(s), no period (eg. SW)
Street Name: when a numbered street use the format 1st, 2nd, 3rd, etc.
Street Classification: abbreviated letters, period (eg. St.)

Building name.

PSU logo decal.
PSU no smoking/vaping decal.

Active ADA door decal (when applicable).

Leadership in Energy and Environmental Design (LEED) decal (when applicable).

Side Entrances must include the following elements:

Building name.

PSU logo decal.

PSU no smoking/vaping decal.

Active ADA door decal (when applicable).

IV-5: Retail Signage Requirements

Retail signage may include interior window signs, blade signs or surface mounted signs. Sign type, quantities and installation locations must be pre-approved by the Campus Planning Office.

No neon reader boards are permitted.

All signage shall conform to the applicable lease agreement and these standards. When conflicts arise the most restrictive applies.

Signage shall be focused on serving campus pedestrian circulation.

Signage shall be directed at the pedestrian and pedestrian scale rather than to drive by customers.

Signage design and lettering will be unique, graphically stimulating, and aesthetically appealing. It should be designed to create pedestrian interest and identity.

Interior window signs are preferred and encouraged to create pedestrian interest, but must not be deemed offensive or in poor taste by the University.

Through the subjective review process, PSU will make the final determination as to whether proposed signage is aesthetically desirable for the University campus.

All signage must be approved by city of Portland design review, the tenant's signage contractor shall obtain all required signage and building permits.

Signage shall be internally illuminated when hours of operation extend between dusk and dawn.

Blade signs will follow the format in use at the Broadway building and shall not to exceed 6 square feet in area. Double sided blade signs are required.

Unless otherwise approved, signage is to be attached to the bottom of the awning and centered over the exterior storefront of the tenant space. Tenant is to work with PSU's Architect and Structural Engineer to ensure the coordinated safe attachment and support of signage. Signage shall not exceed 28 square feet, and maximum sign height shall not exceed 16" and weight shall not exceed the structural limitations of the attachment surface.

Signage shall be maintained and fully functional at all times.

IV-6: `A' Frame and Yard Sign Policies

Applicability:
This policy addresses the use of temporary portable signs, referred to herein as `A' Frame or Yard signs. The policy applies to all PSU tenants, departments and student groups. The City of Portland regulates the placement of furnishings, including temporary portable signs, in the public right of way.

General requirements:
`A' Frame signage is to be located in the public right-of-way and conform to the City of Portland Signage Code section 32.32.30 (3). PSU does not permit yard signs of any type without the prior approval of the Director of the Campus Planning Office.

PSU will grant permission to use `A' Frame signs only in the following instances:

- *The applicant does not have street fronting signage opportunity*
- *The applicant agrees to use the sign only for temporary advertising of sales, or new goods and services, or in conjunction with a special event. The term "temporary advertising" means for up to two (2) weeks at a time with at least two (2) weeks between uses unless otherwise approved. The term "special event" refers to an event that occurs for up to one (1) week not more than once per academic term.*
- *The `A' frame usage must be agreed to in writing between the applicant and the office of Facilities and Property Management prior to installation.*

Upon prior written approval by the PSU Campus Planning Office and the office of Facilities and Property Management, the placement of `A' frame signs may be allowed on PSU property.

A maximum of one (1) `A' Frame sign is allowed for temporarily advertising. A maximum of four (4) `A' Frame signs or easels are allowed in conjunction with special events.

The use of `A' frame signs for temporary advertising will only be allowed when the sign owner's establishment is open for business. Signs shall be removed when the business is closed.

`A' Frame signs and easels for special events are allowed to be placed outside the event venue or in public corridors leading to the venue on the day(s) of the event only. Such placement may not block access to walkways or doors. All signs and easels must be removed immediately following the event.

All `A' Frame signs shall include an emergency contact name and phone number.

`A' Frame signs must be secured from blowing over by applying weight at the bottom of the sign. Signs may not be attached to buildings, utilities, parking meters, poles, railings, fixtures, furniture, or any form of landscaping.

Placement of `A' Frame signs shall not create a hazard or circulation obstruction, including ADA access and routes. Signs shall not block the sidewalk pedestrian zone, designated bike lanes, vehicle traffic , parking spaces, driveways, doorways, means of exiting or fire protection equipment.

`A' Frame signs shall not confuse or obstruct traffic signs, signals or devices, nor obstruct the sight, attract or distract the attention of motorists, reflect light or cause glare to oncoming traffic.

Attachments to `A' Frame signs, (such as wind-activated propellers, balloons, pennants, etc.), are not permitted.

`A' Frame signs shall not display content that is considered offensive by Facilities and Property Management.

`A' Frame signs shall be maintained in a clean, safe and presentable condition. Upon notification by Facilities and Property Management that a sign has become unsightly, it shall immediately be removed or restored to a satisfactory condition.

Improperly installed or maintained `A' Frame signs shall be removed or corrected immediately upon notification. Signs that constitute a public hazard or are not removed or corrected within 24 hours may be confiscated and stored by Facilities and Property at the sign owner's expense.

Portland State University shall not be responsible for any lost or stolen portable signs and easels.

For further information or to request to install `A' Frame signs on or serving PSU properties contact Facilities and Property Management at (503) 725-3738).

IV-7: Chalking and Notice Posting Policy

CHALKING

Chalking on the PSU campus is **prohibited without prior written approval** from the Art and Temporary Installation Committee.

Only PSU registered organizations or departments, and organizations hosting an event at PSU or in the South Park Blocks, may be granted permission to chalk, and only for the period promoting the specified activity or event.

PSU organizations or departments wishing to use chalking to promote PSU related activities or events must **submit an installation request form** via email to 2fix@pdx.edu. Further information regarding temporary chalk installations can be found here: https://www.pdx.edu/pcre/temporary-installations-commissioned-and-donated-art

Approved chalking will only be allowed on horizontal concrete and asphalt surfaces of university maintained grounds that are exposed to the elements and not covered by a roof or overhang. Chalking is not permitted on other surfaces, materials, structures and fixtures.

Chalking is not permitted within ten (10) feet of any building door or entrance.

The material used to mark the pavement must be a water-soluble stick chalk. The use of any other marking materials, or coatings to preserve the chalk is prohibited.

Organizations or departments granted permission to use chalk are responsible for removing any chalk not removed by rainfall within 48 hours following the end of the approved chalking period. Chalking that is defaced must be removed immediately by the organizationor department.

Environmentally sound clean- up is required. A deck brush and cold water must be used to remove the chalk. The surface should be wet, and then scrubbed with the brush and rinsed. This process should be repeated until the chalk is completely gone.

PSU has no responsibility to ensure that chalked messages are preserved. Attempts will be made to preserve the messages during the period approved by the Art and Temporary Installation Committee.

The cost to remove any chalking, or to repair property damage, may be billed to the responsible organization or individual.

NOTICE POSTING

Notices and flyers are only allowed to be posted on bulletin boards. Insert sleeves, where they exist, are reserved for official classroom schedules only. Where bulletin boards are not provided, notices and flyers may be posted adjacent to classroom entries as indicated below. All notices and flyers must be dated and removed within two weeks following the posted date or intended use. Notices may not be posted in the public right-of-way, or on any other PSU interior or exterior surfaces.

Bulletin Boards: Notices and flyers must be affixed to bulletin boards with tacks only. The use of staples, tape and glue are prohibited. Persons who are posting materials are encouraged to respect others' posting needs. Outdated or duplicate notices and flyers may be removed. Special purpose bulletin boards (e.g., Student Activities and Leadership Programs (SALP) bulletin boards or academic program related boards managed by particular PSU departments) are limited to their specific purpose and may have their own posting guidelines.

Other Approved Surfaces: Where bulletin boards are not provided, classroom notices may be posted on the wall in the posting area shown in drawing below. Notices are to be attached using only painters tape (not Scotch tape). Notices must not block or interfere with the room signage or windows in doors.

Flyers, and Notices that are not posted in conformance with these requirements, may be removed. The cost to remove notices, or to repair property damage, may be billed to the responsible organization or individual.

If you are unsure whether a surface on campus is an approved surface or not, please contact:

Campus Planning Office at: 503-725-4318.

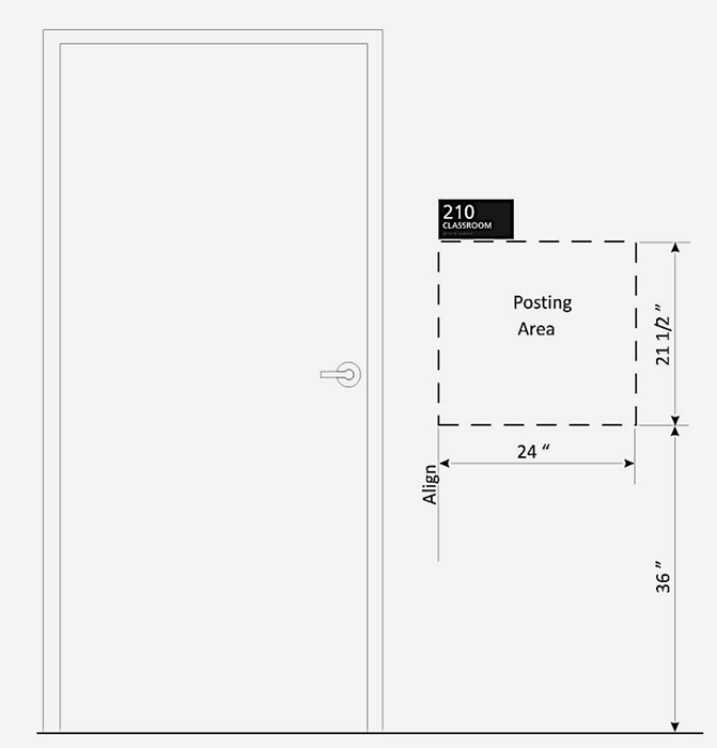

Other Approved Surface Posting Area

IV-8: Signage & Wayfinding Technical Specifications

The technical specifications for fabrication and installation of the prescriptive signs are maintained by CPC. The specifications are available through the CPC website: https://www.pdx.edu/construction/technical-design-standards, or from the CPC Signage Coordinator.

IV-9: References & Precedence

Precedence Samples	Relevance
Univ. Alabama	Format / Purpose / Branding / Specifications / Vocabulary
Univ. Albany – SUNY	Policy / Procedures / Branding
Univ. Buffalo	Format / Purpose
UC – San Francisco	Format / Purpose / Branding
Univ. Minnesota	Format / Purpose / Branding
Univ. New Mexico	Format / Purpose / Vocabulary
New York University	Format / Purpose / Process / Branding
North Carolina Univ.	Format / Branding
Penn State	Purpose / Purpose / Web Interface
Univ. Virginia	Purpose / Branding
Univ. Washington	Goals
Yale	Format / Purpose / Branding

IV-10: Standard Signage Templates

Contents

Sign Type	Page
Sign Type A	30
Sign Type B-1	31
Sign Type B-2	32
Sign Type B-3	33
Sign Type B-4	34
Sign Type B-5	35
Sign Type B-6	36
Sign Type C-1	37
Sign Type C-2	38
Sign Type C-4 (Entrance Signage Layout)	39
Sign Type D-1	40
Sign Type D-2	41
Sign Type E-1	42
Sign Type E-2	43
Sign Type E-3 (Single Flag)	44
Sign Type E-3 (Dual Flag)	45
Sign Type E-4	46
Sign Type E-5	47
Sign Type E-6	48
Sign Type E-7	49
Sign Type F-1	50
Sign Type F-2	50

Sign Type	Page
Sign Type G	52
Sign Type H	53
Sign Type J	54
Sign Type K	55
Sign Type N-1	56
Sign Type N-2	56
Sign Type N-3	56
Sign Type P	57
Sign Type Q-1	58
Sign Type Q-2	59
Sign Type R-1	60
Sign Type R-2	61
Sign Type S	62
Sign Type T	63
Sign Type U-1	64
Sign Type U-2	64
Sign Type V	65
Sign Type W	66
Sign Type X	67
Sign Type Z (Project Information Sign)	68

Sign Type A

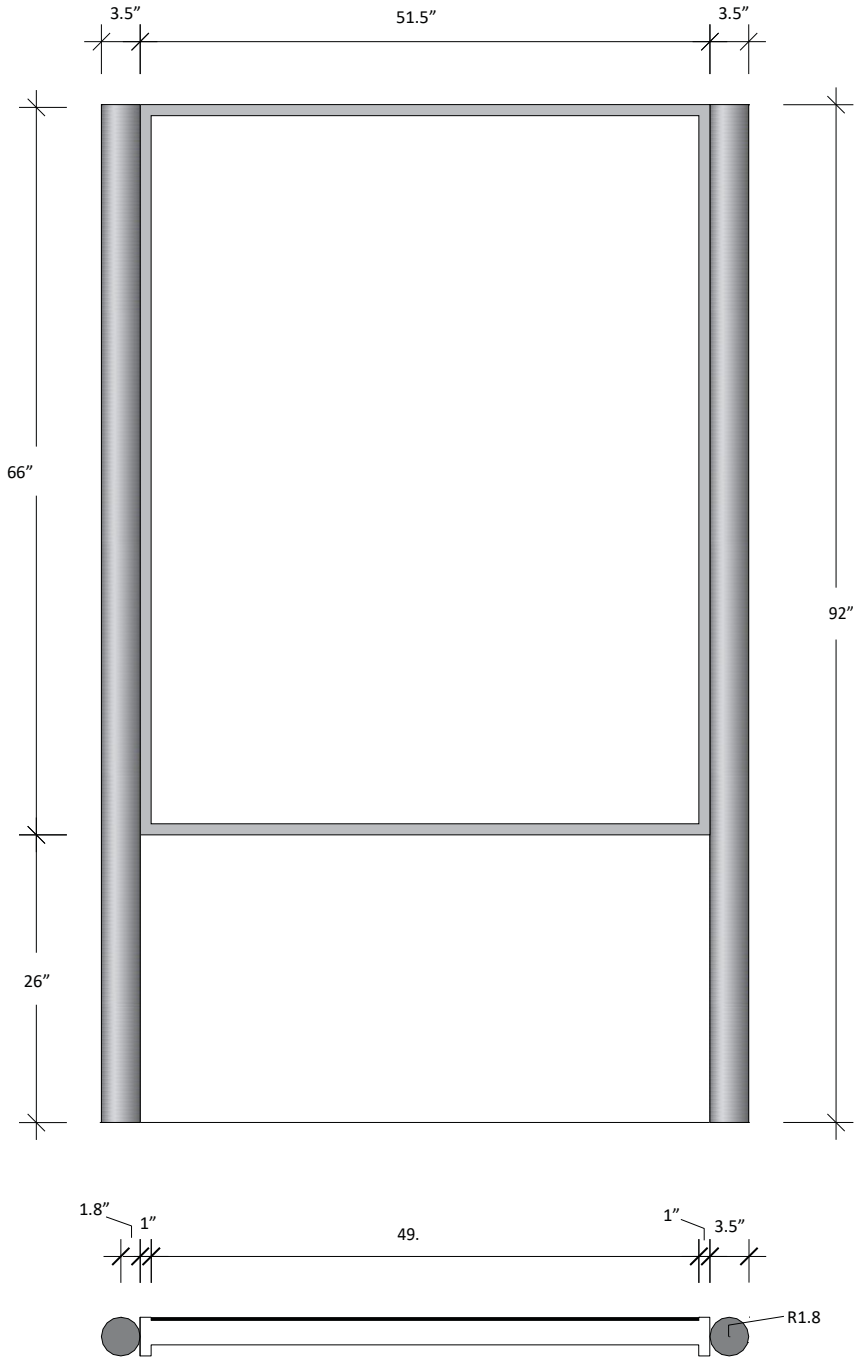

Sign Type B-1

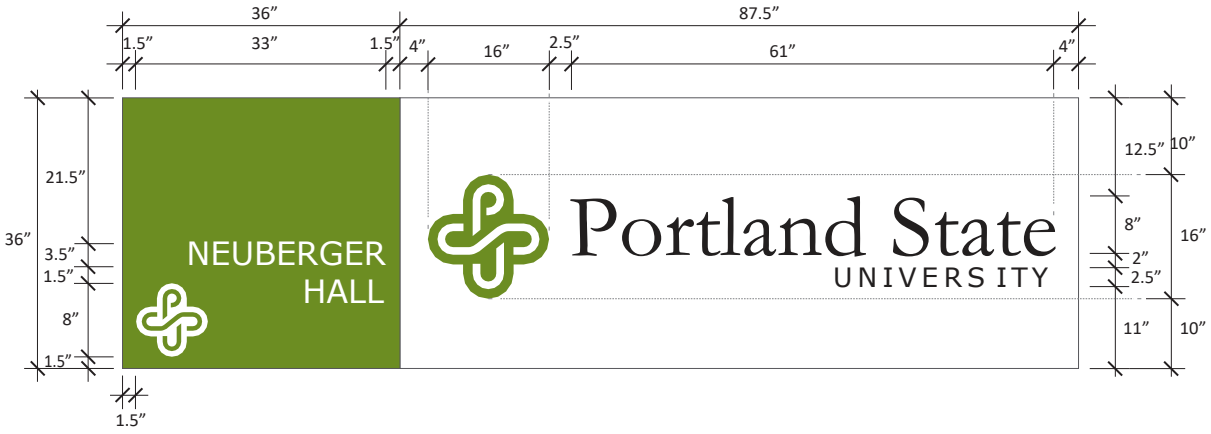
36”
87.5”
1.5”
33”
1.5”
4”
16”
2.5”
61”
4”
21.5”
36”
3.5”
1.5”
8”
1.5”
1.5”
NEUBERGER
HALL
Portland State
UNIVERSITY
12.5”
10”
8”
16”
2”
2.5”
11”
10”

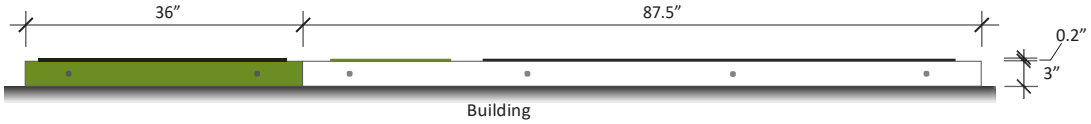
36”
87.5”
0.2”
3”
Building

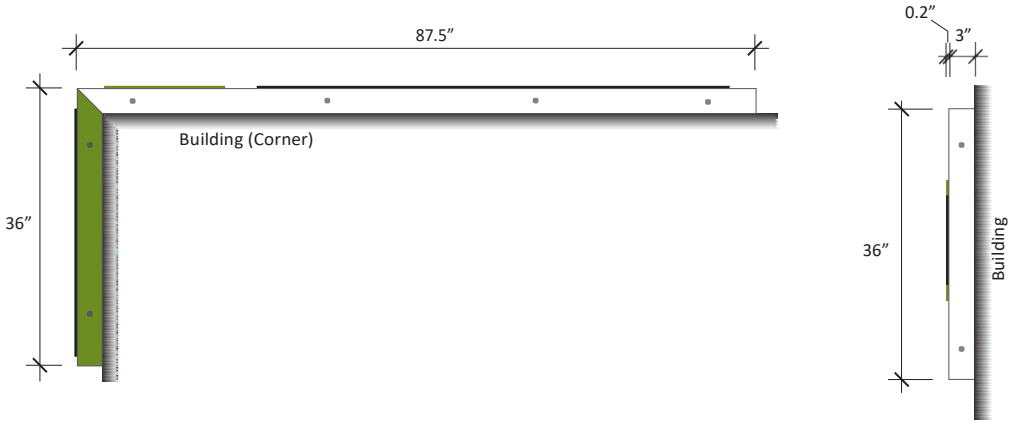
87.5”
Building (Corner)
36”
0.2”
3”
36”
Building

Sign Type B-2

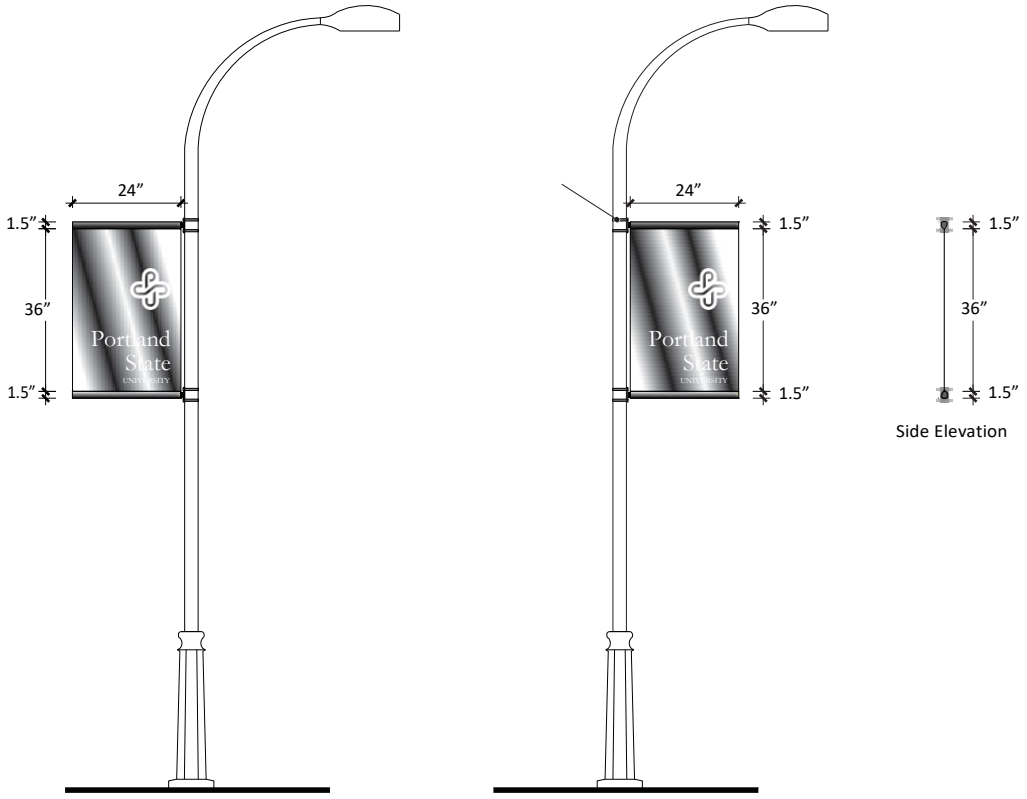
24”
1.5”
36”
1.5”
Portland State
UNIVERSITY
24”
1.5”
36”
1.5”
Portland State
UNIVERSITY
1.5”
36”
1.5”
Side Elevation

Sign Type B-3

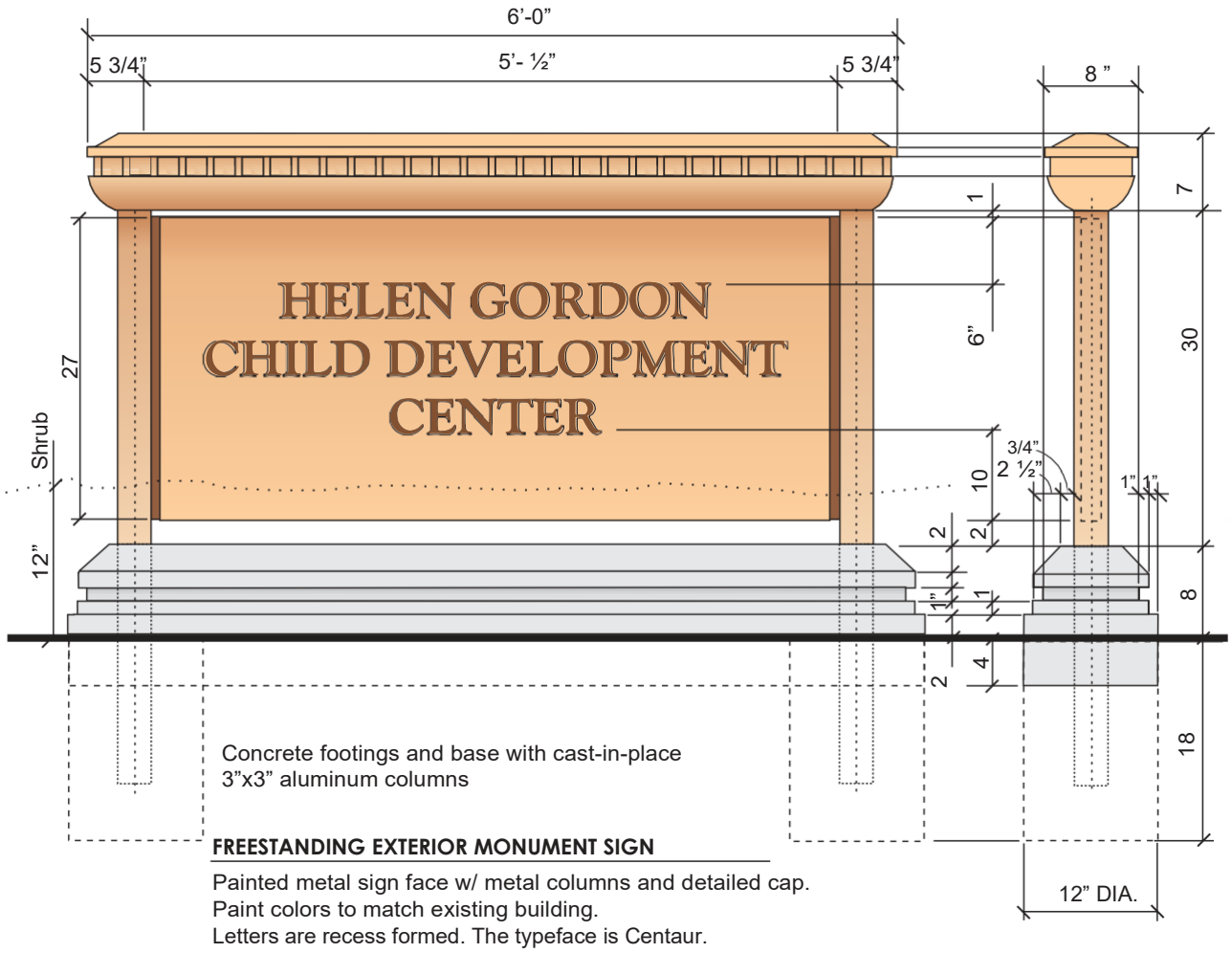

Concrete footings and base with cast-in-place
3"x3" aluminum columns

FREESTANDING EXTERIOR MONUMENT SIGN

Painted metal sign face w/ metal columns and detailed cap.
Paint colors to match existing building.
Letters are recess formed. The typeface is Centaur.

Sign Type B-4

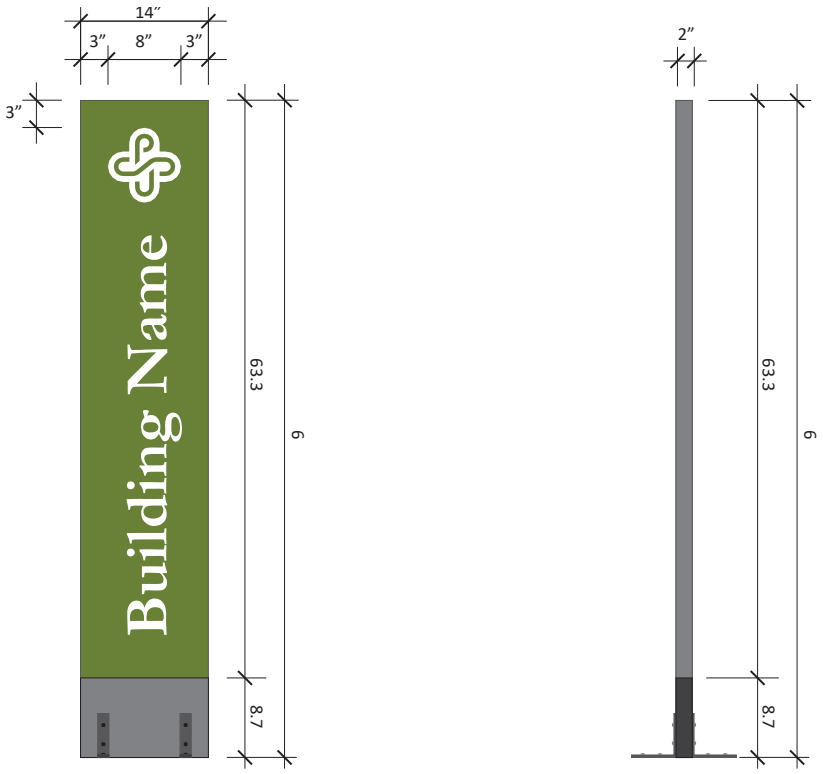

Sign Type B-5

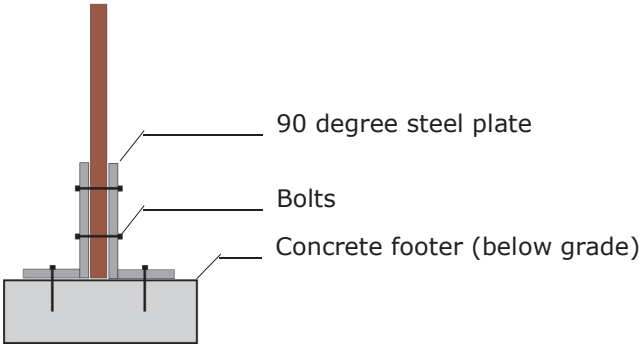
90 degree steel plate
Bolts
Concrete footer (below grade)

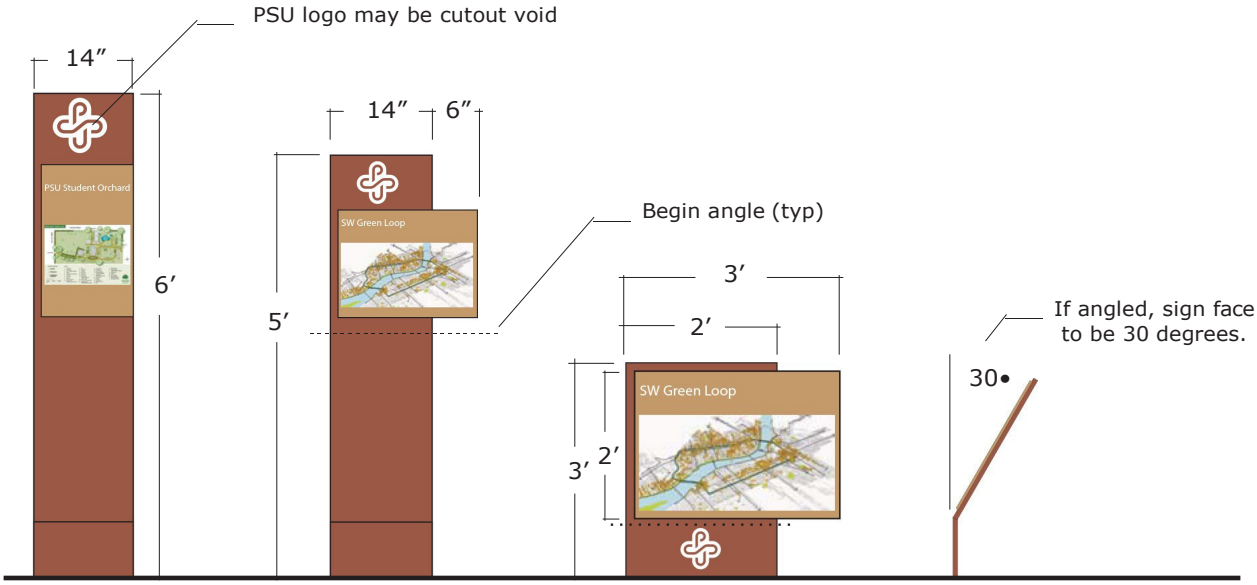
PSU logo may be cutout void
14″
6′
PSU Student Orchard
14″
6″
5′
SW Green Loop
Begin angle (typ)
3′
2′
3′
2′
SW Green Loop
If angled, sign face
to be 30 degrees.
30•

Sign Type B-6

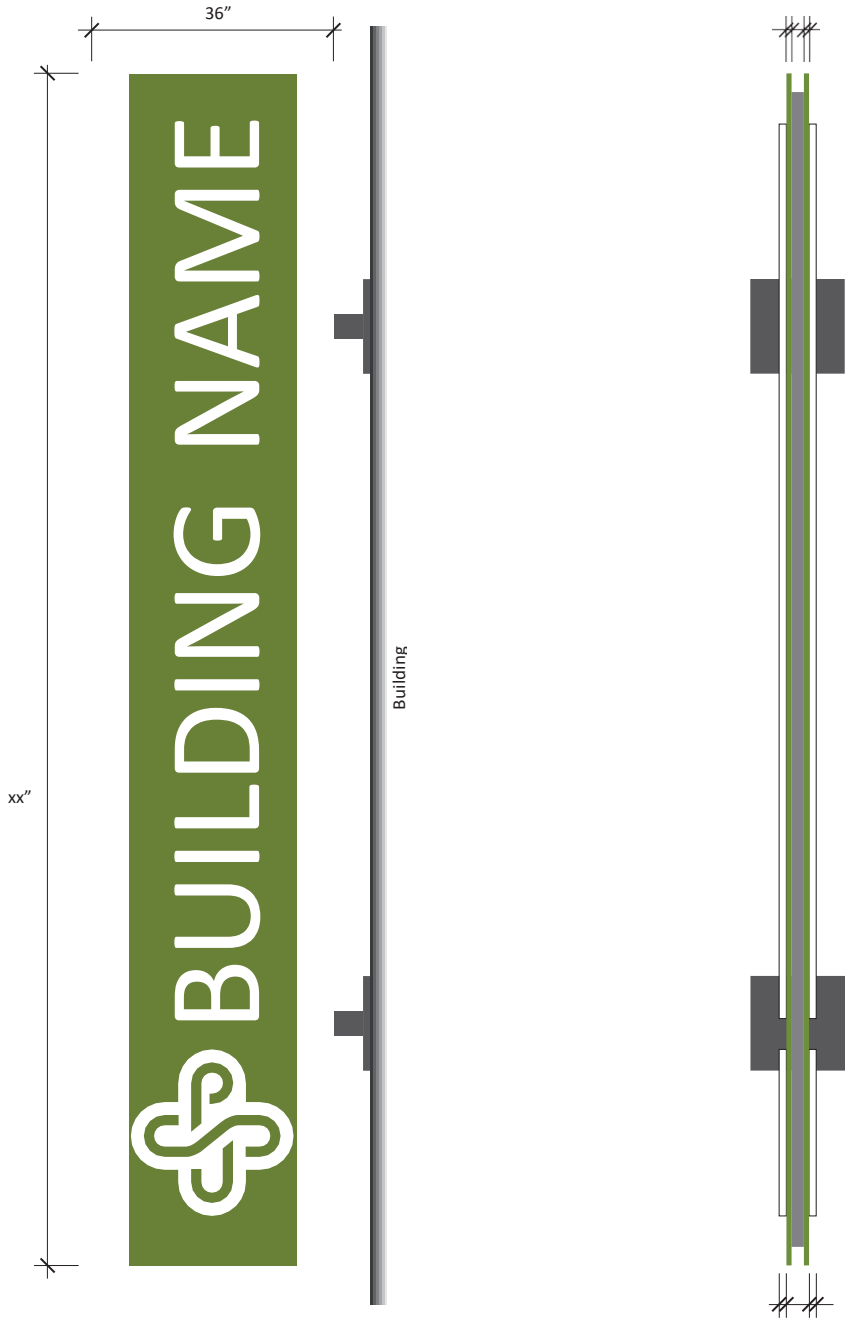

Sign Type C-1

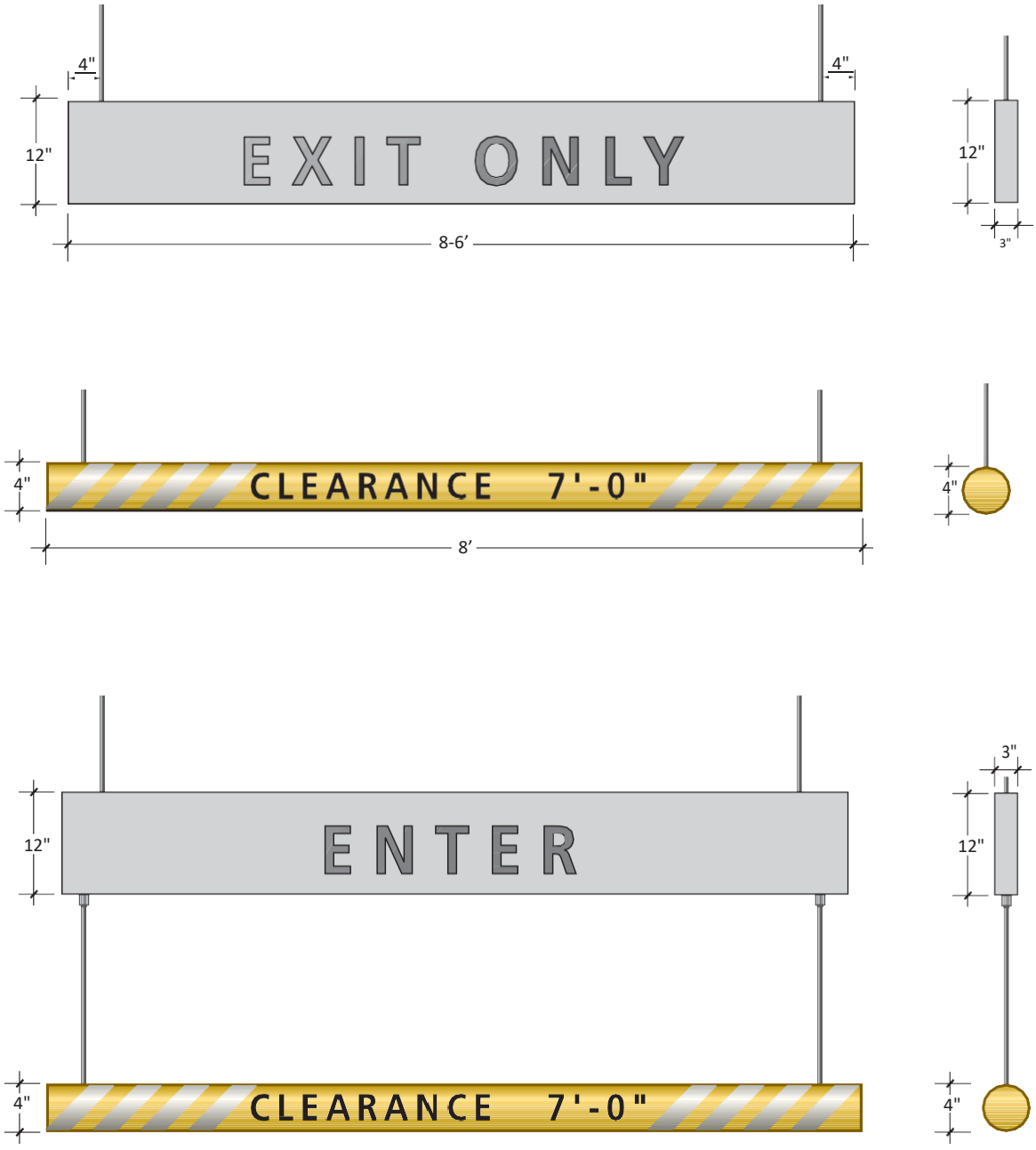
4"
4"
12"
EXIT ONLY
8-6'
12"
3"
4"
CLEARANCE 7'-0"
8'
4"
3"
12"
ENTER
12"
4"
CLEARANCE 7'-0"
4"

Sign Type C-2

* = Nominal Measurement

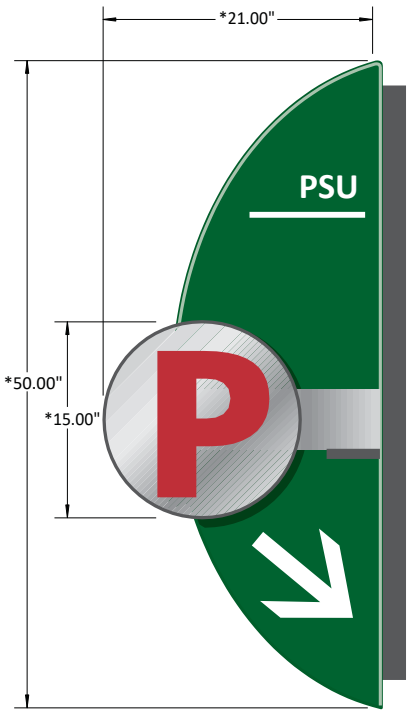

INTENT ELEVATION

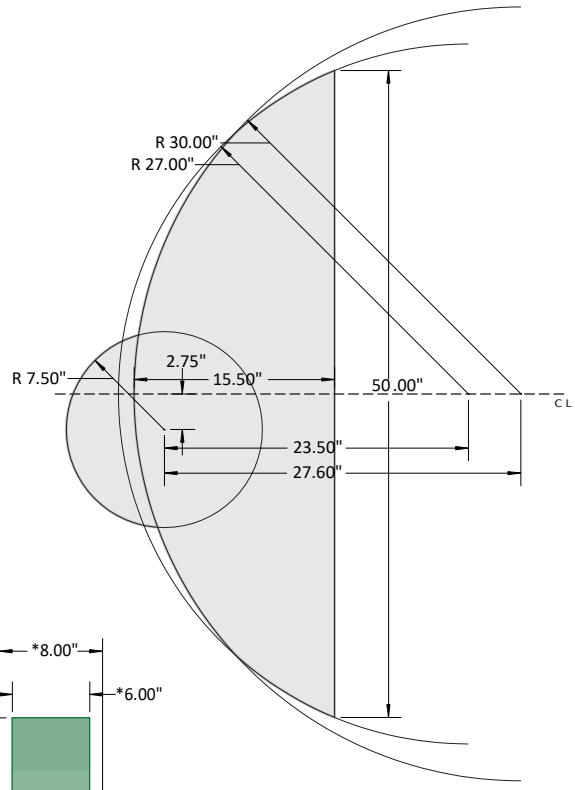

CONSTRUCTION OF ARCHS

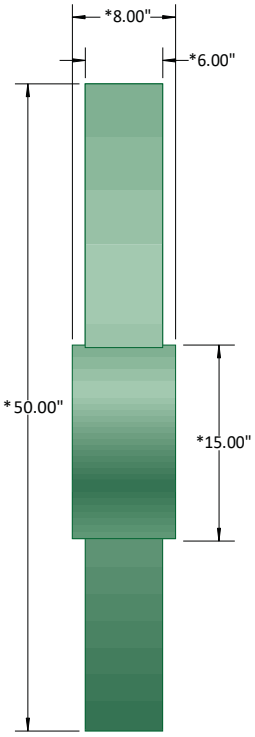

VIEW FROM "FRONT"

Sign Type C-4 (Entrance Signage Layout)

Sign Type D-1

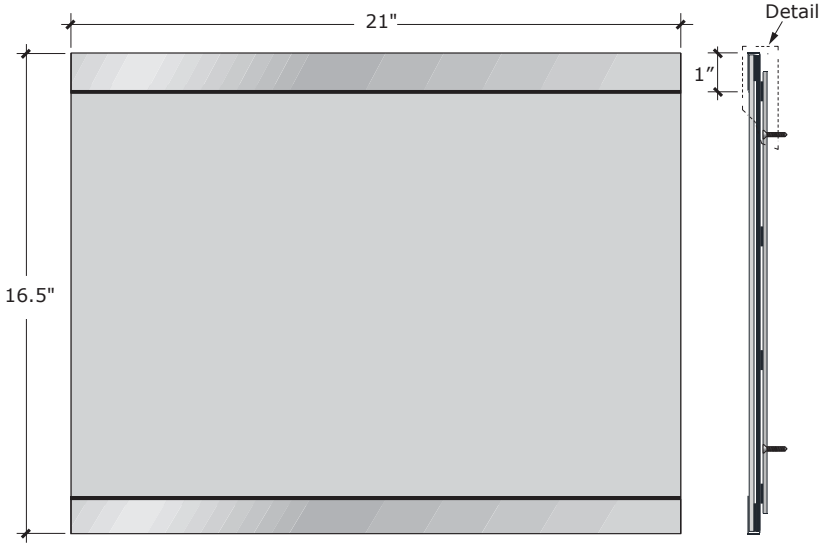

Front Elevation

Side Elevation

Sign accommodates six lines of information

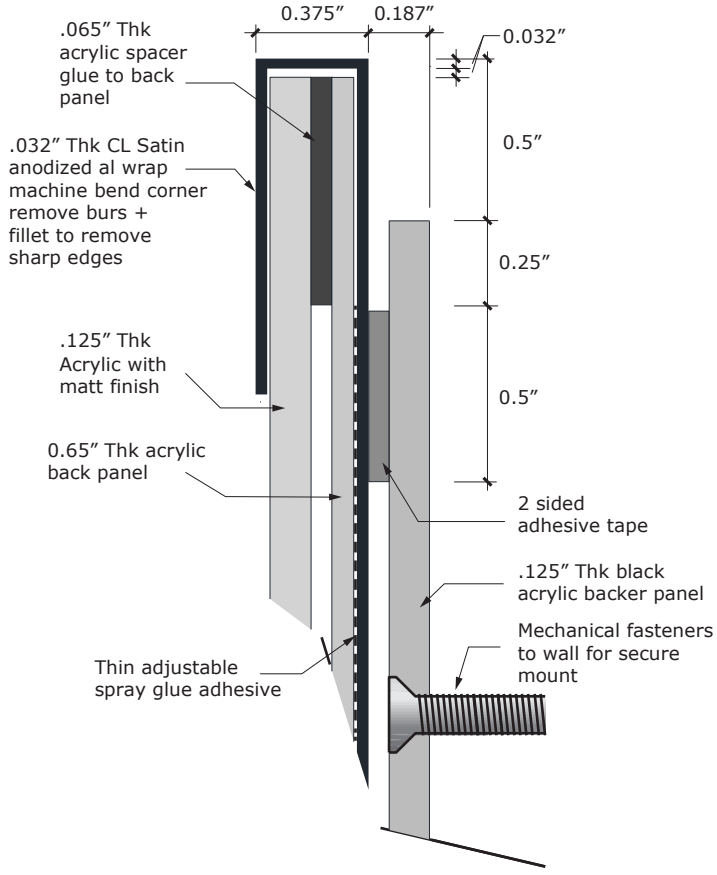

Sign Type D-2

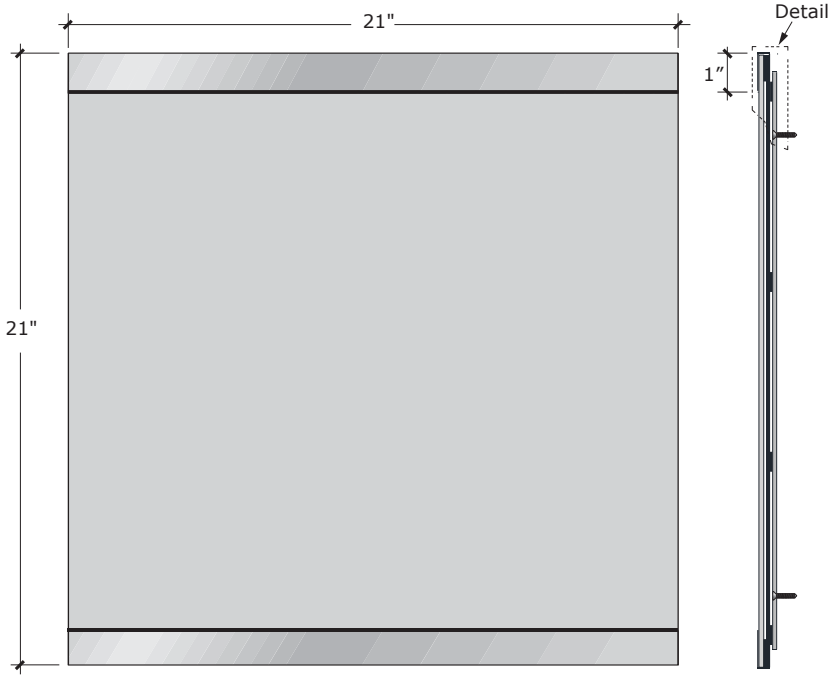

Front Elevation

Side Elevation

Sign accommodates eight lines of information

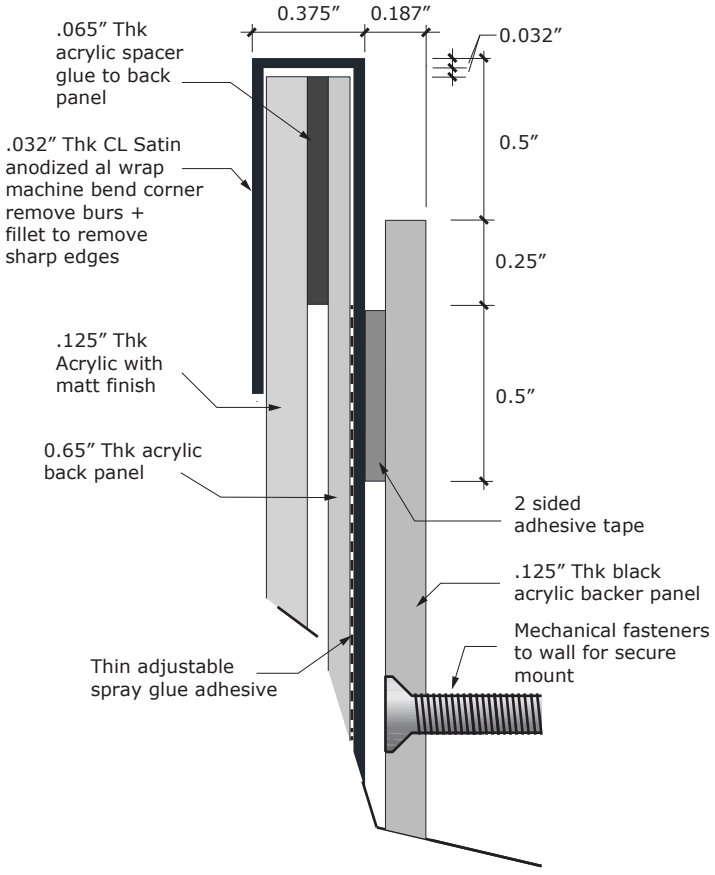

Sign Type E-1

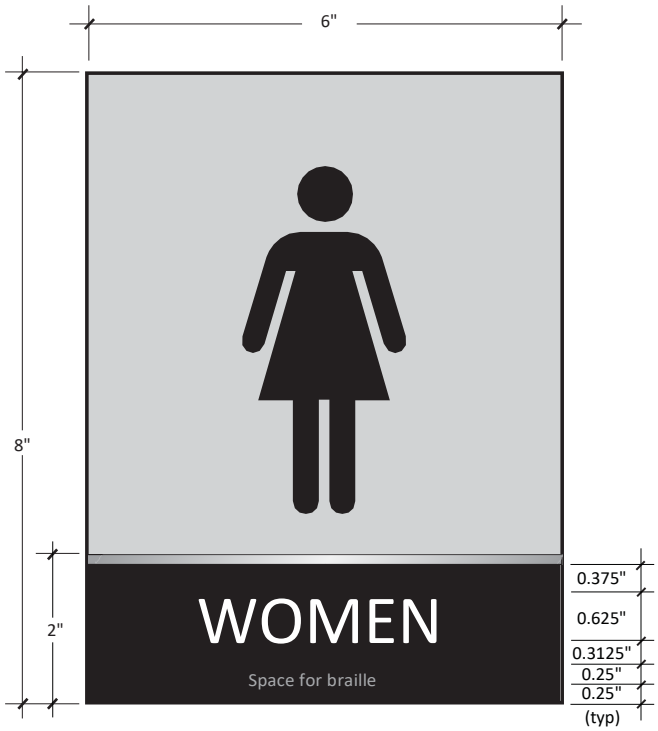

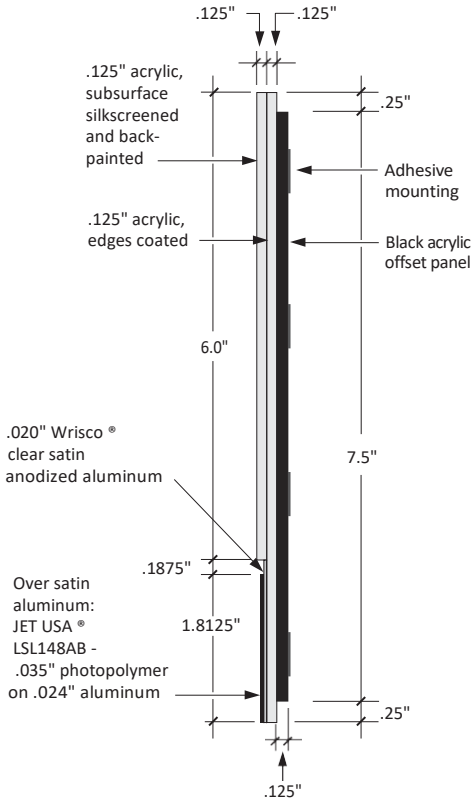

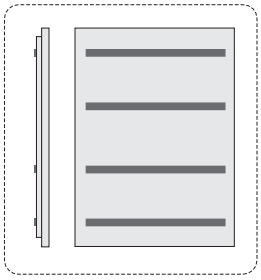

Mounting Advisory

Sign Type E-2

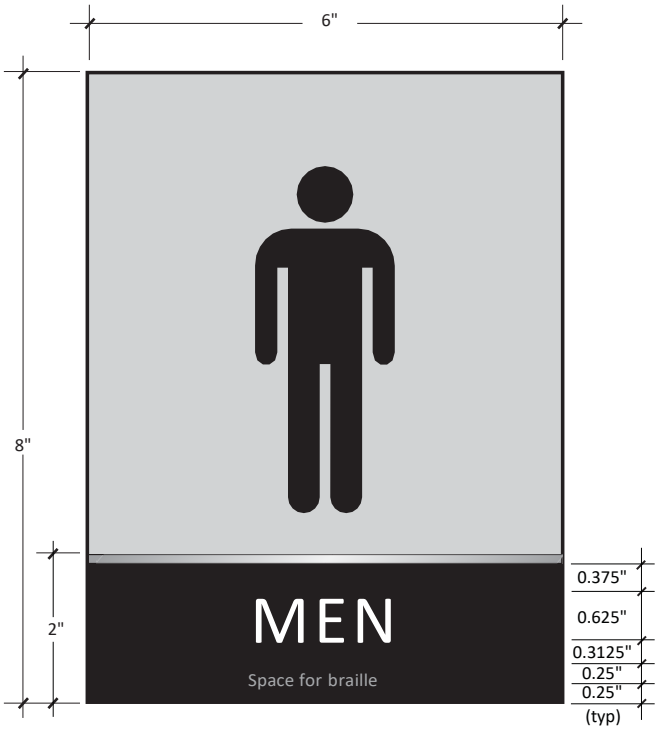

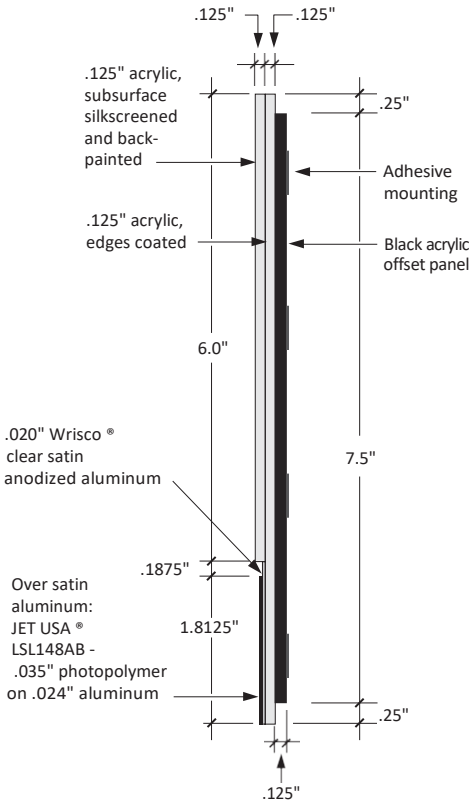

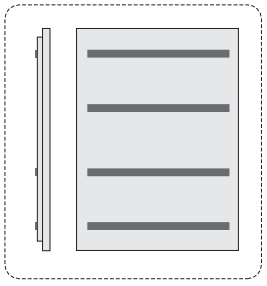

Mounting Advisory

Sign Type E-3 (Single Flag)

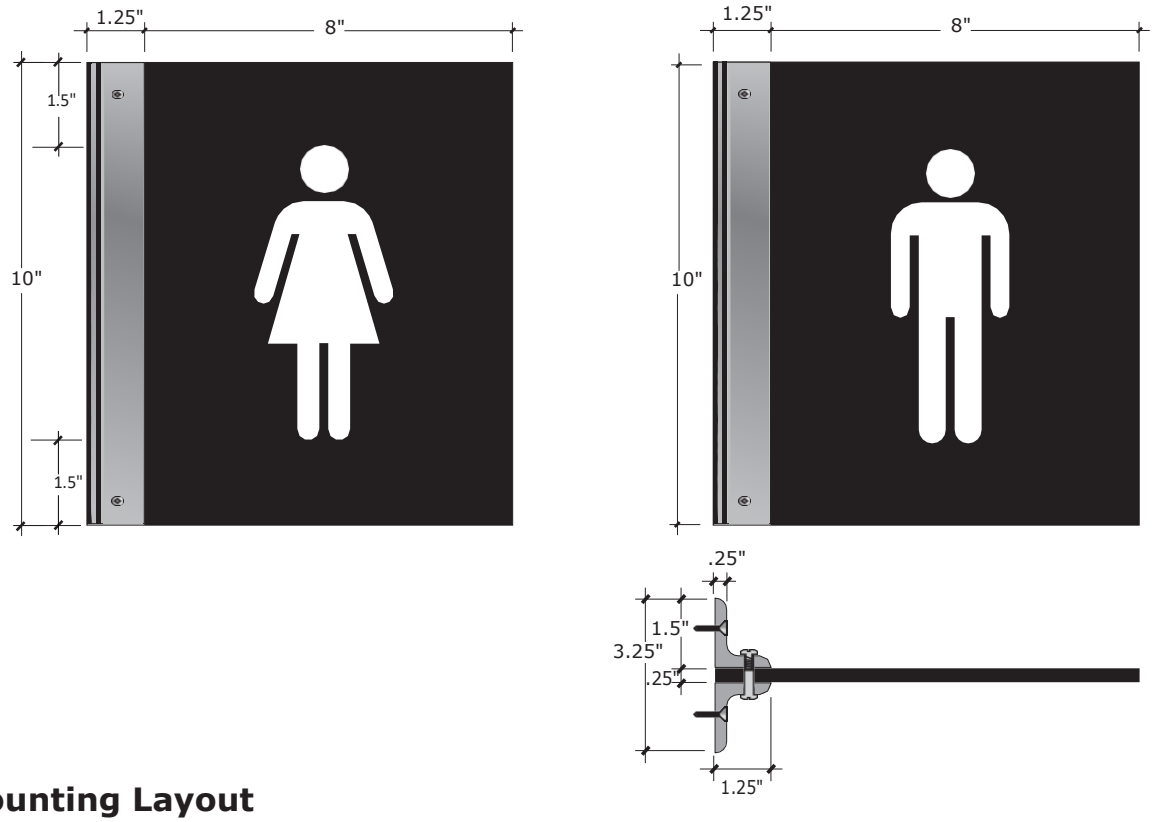

Mounting Layout

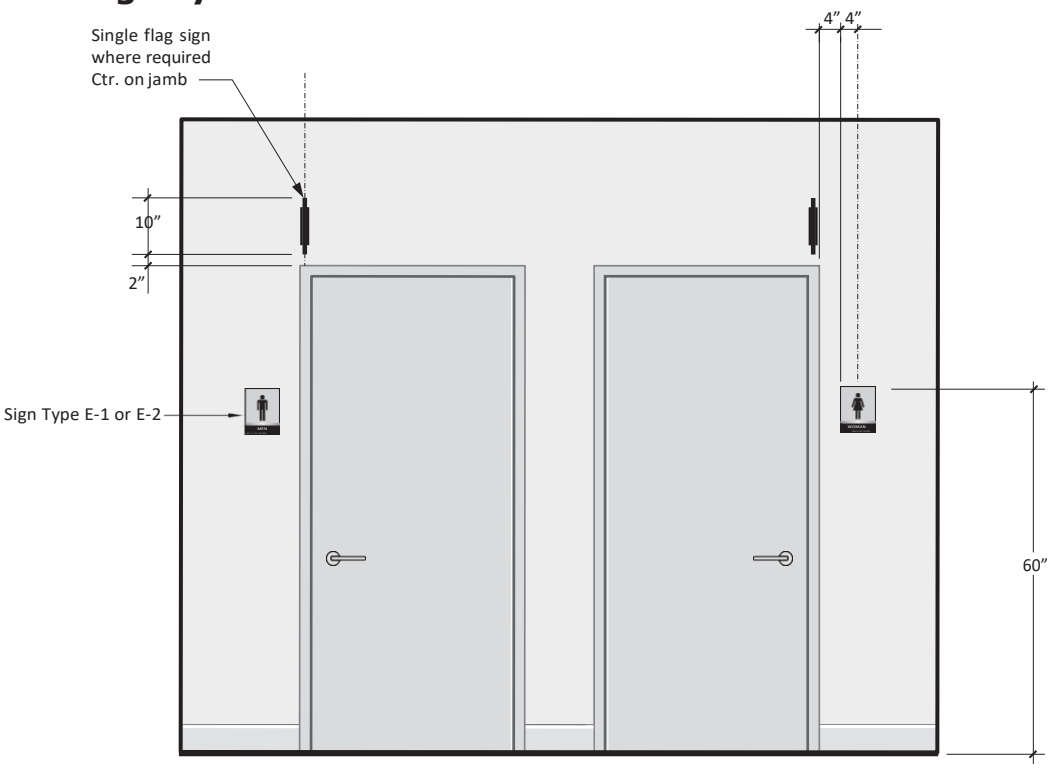

Sign Type E-3 (Dual Flag)

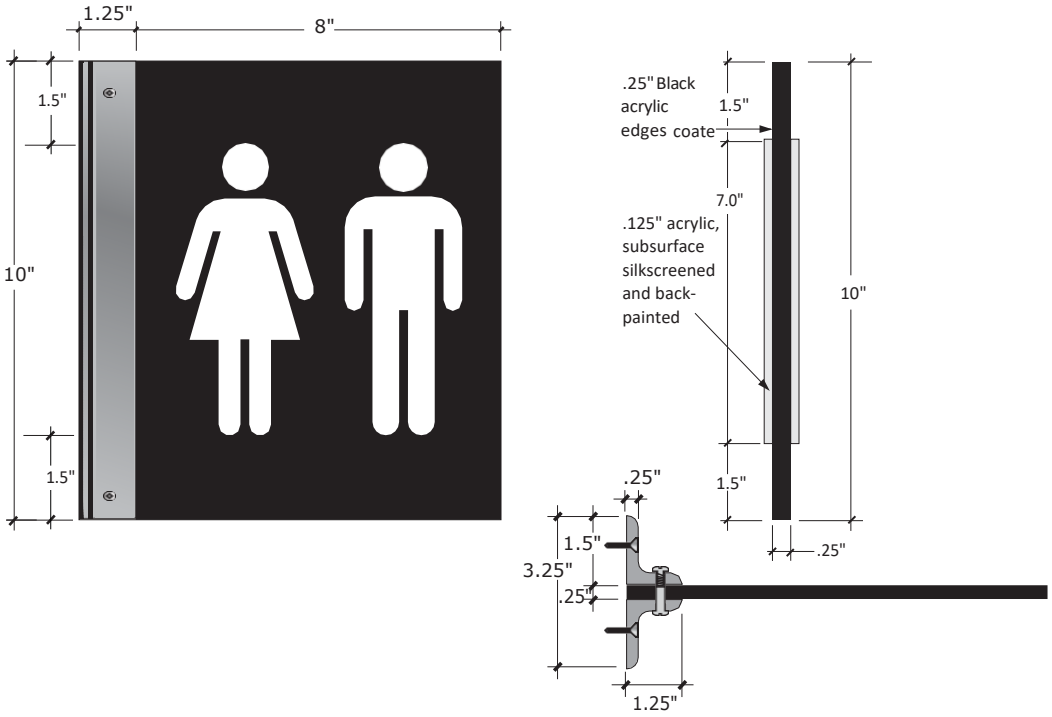

Mounting Layout (E-3, E-4, E-5, E-6, E-7)

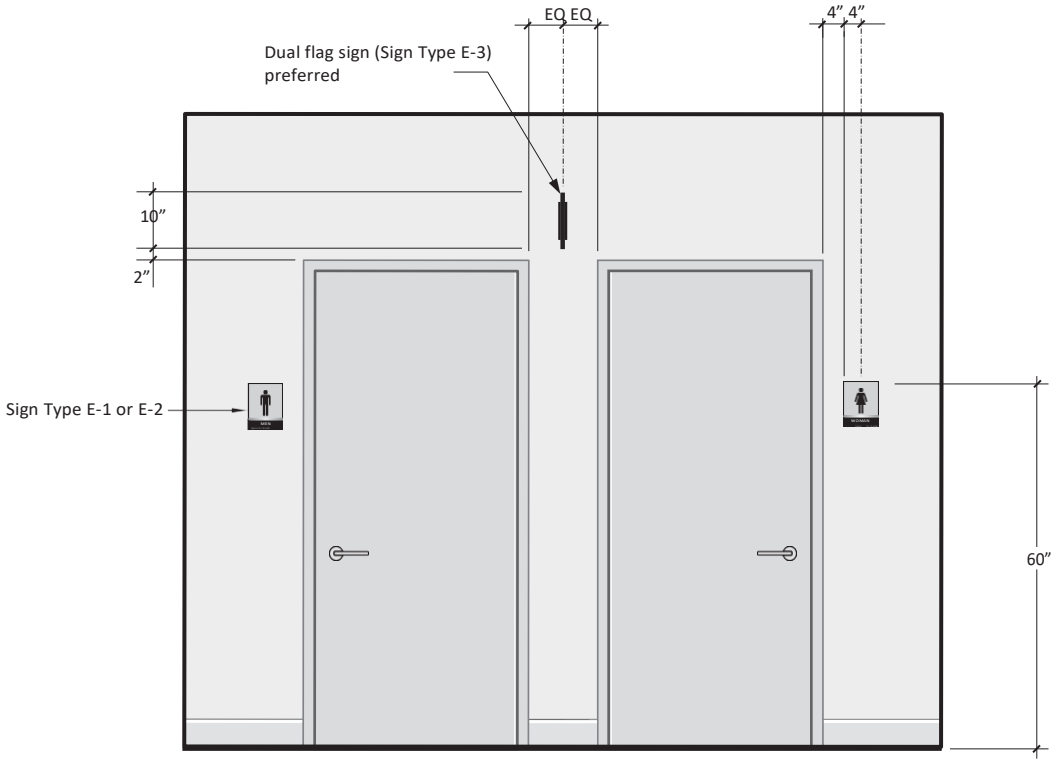

Sign Type E-4

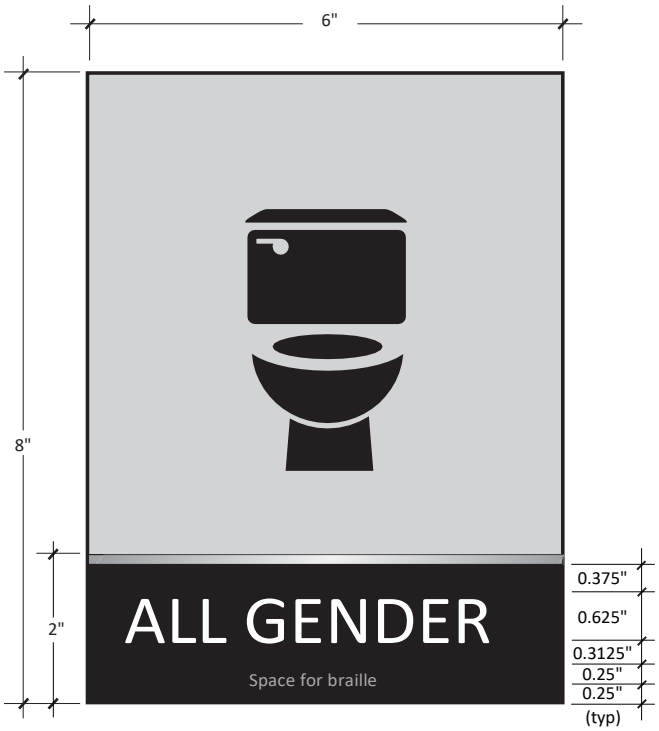

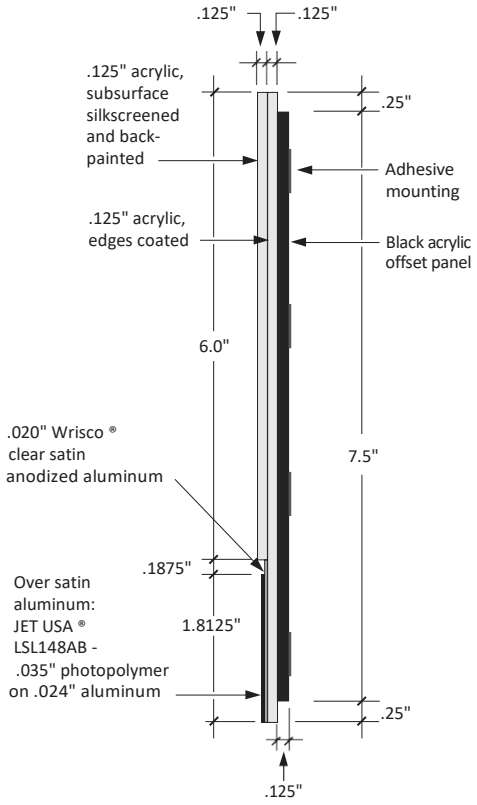

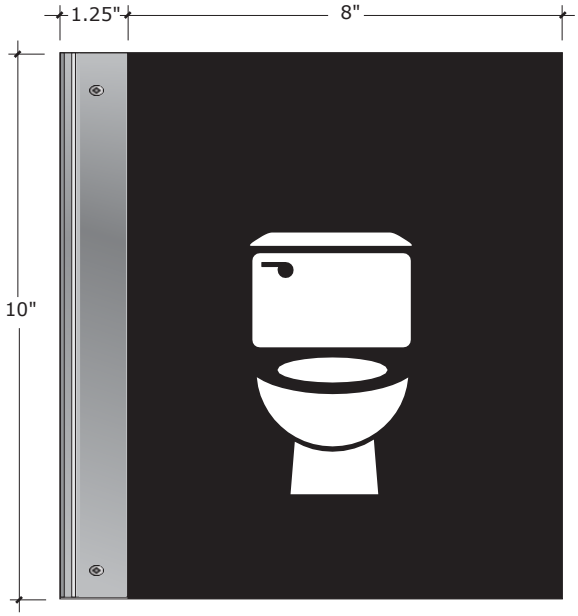

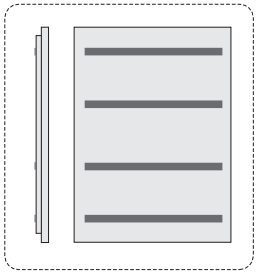

Mounting Advisory

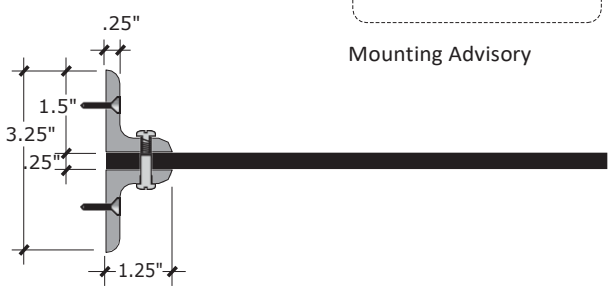

Sign Type E-5

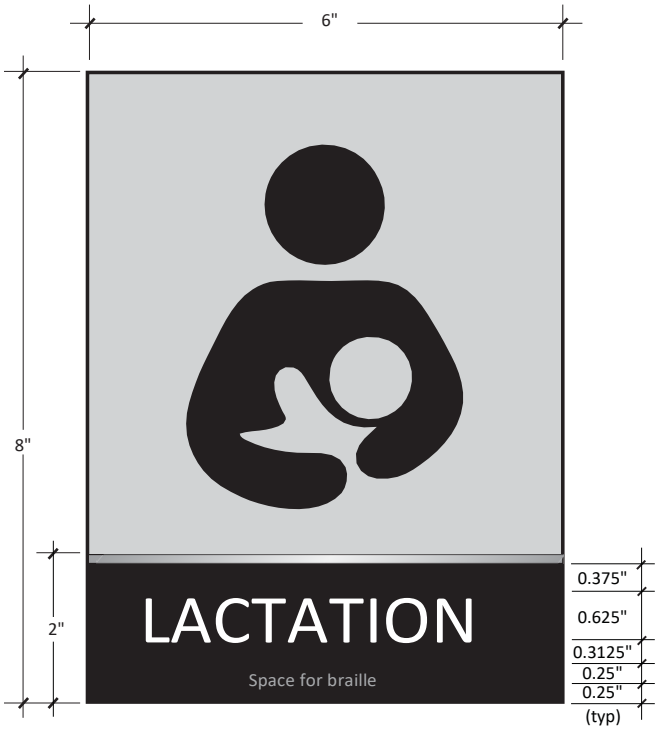

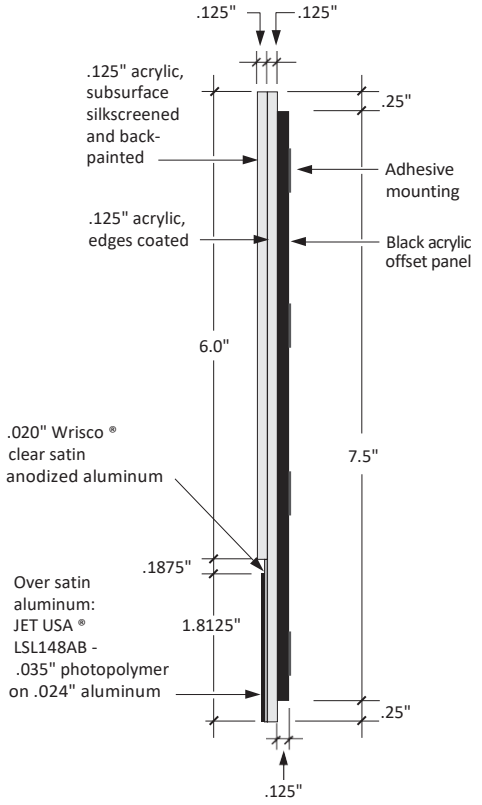

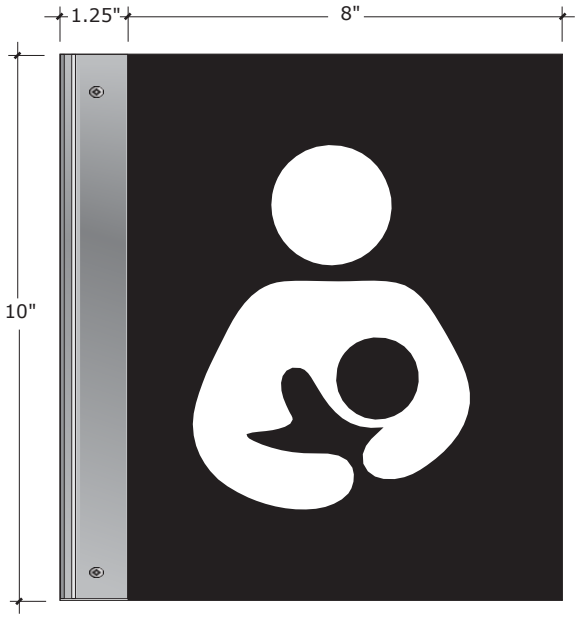



Mounting Advisory

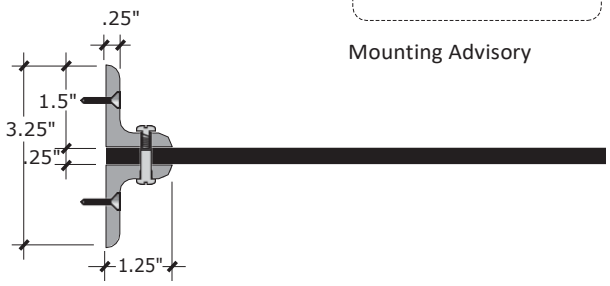

Sign Type E-6



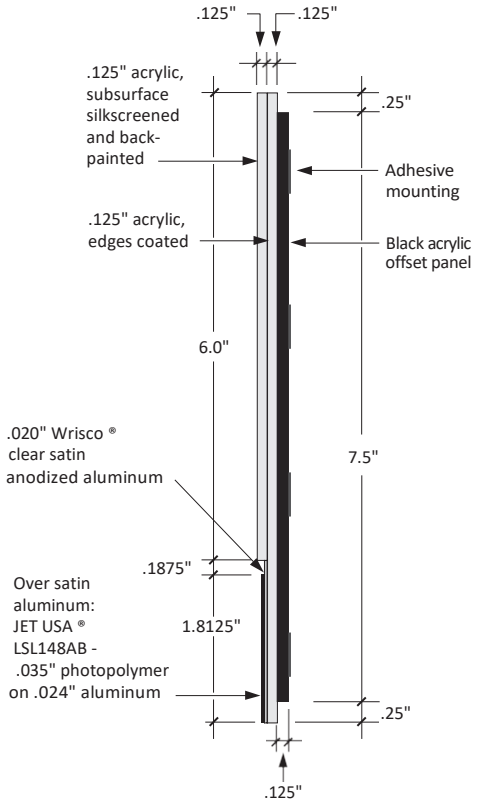

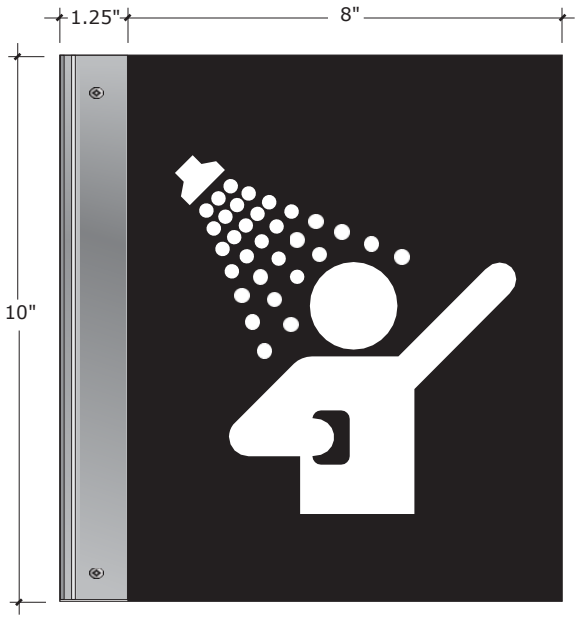

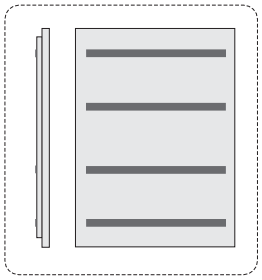

Mounting Advisory

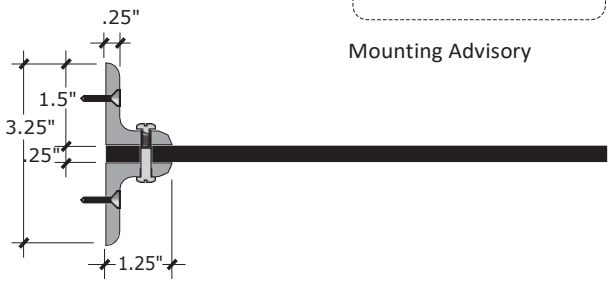

Sign Type E-7

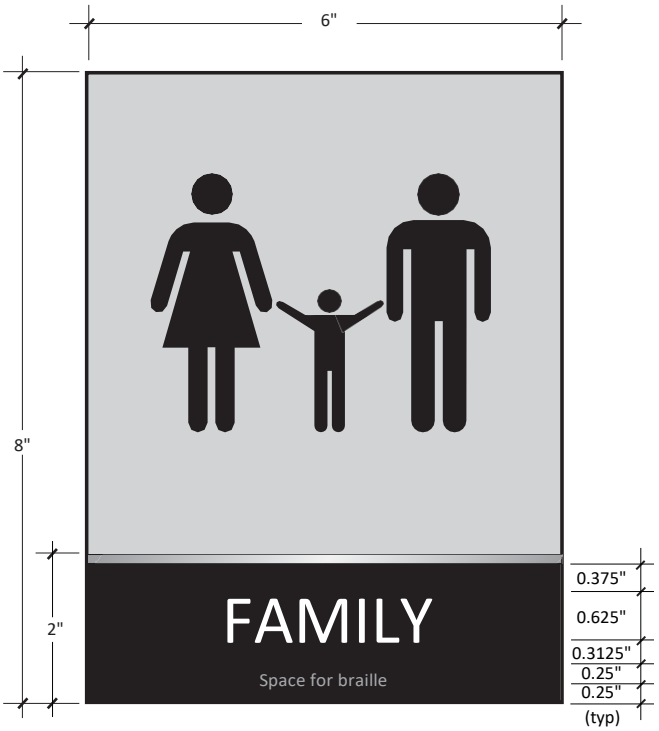

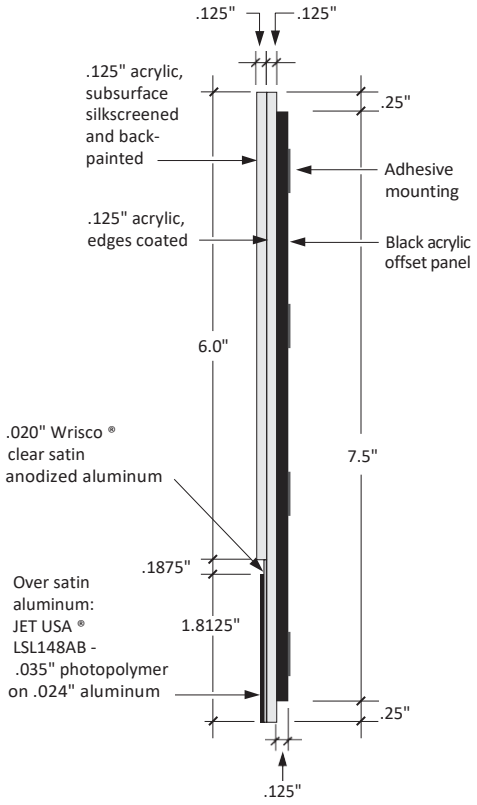

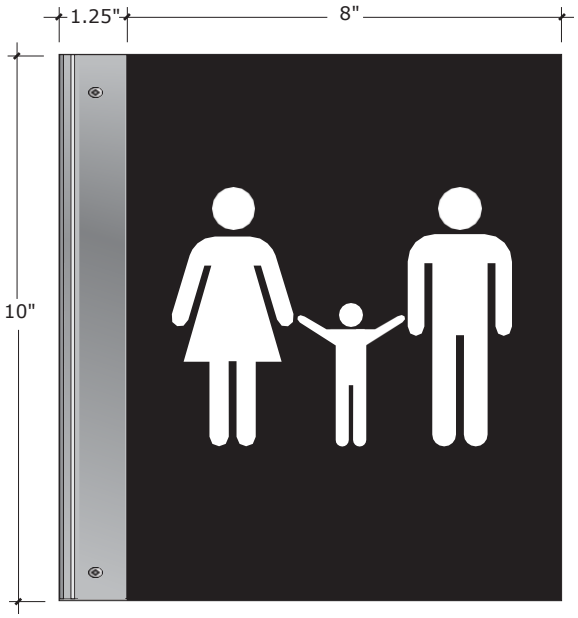

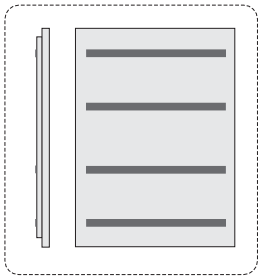

Mounting Advisory

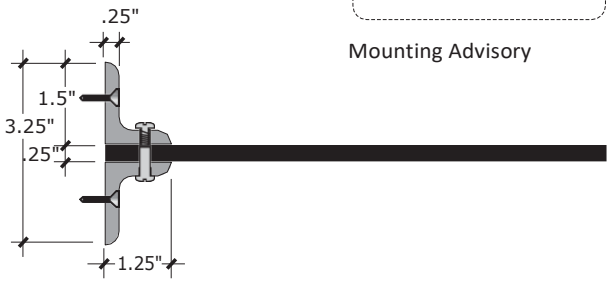

Sign Type F-1

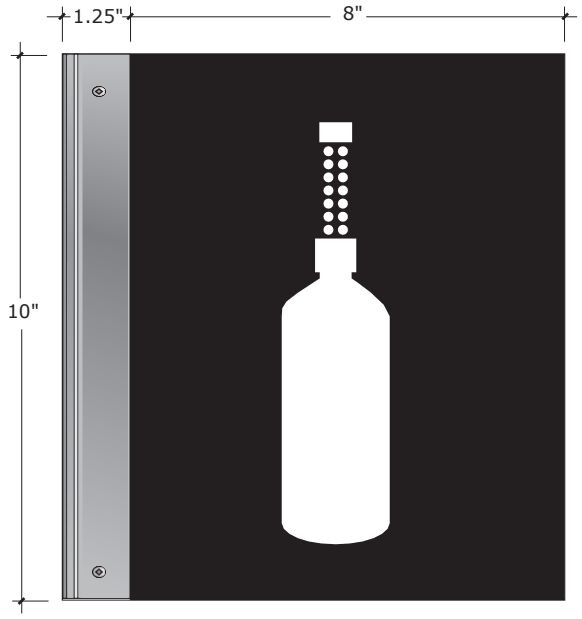

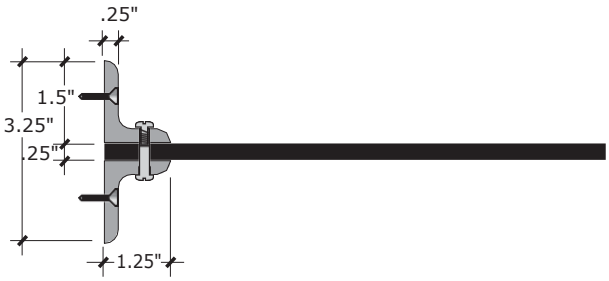

Sign Type F-2

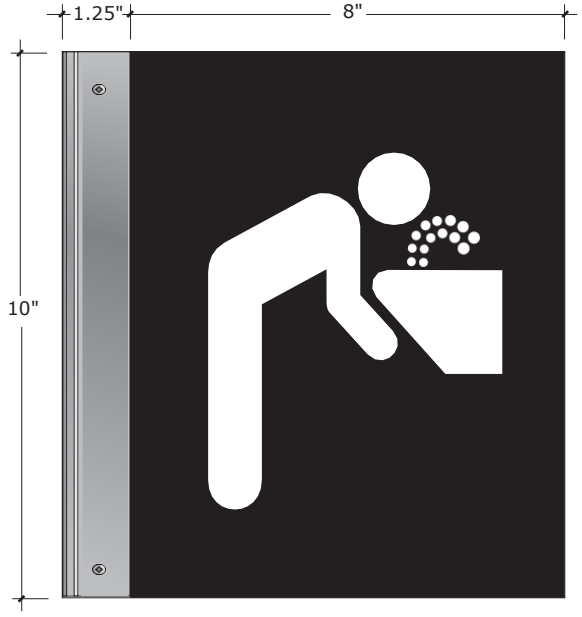

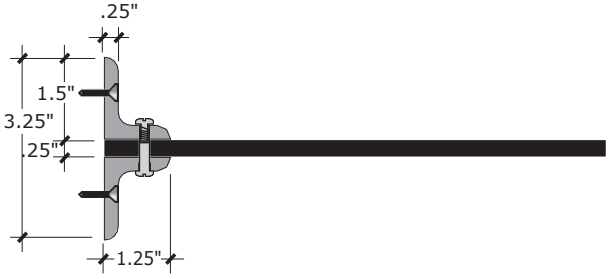

Sign Type F Mounting Layout

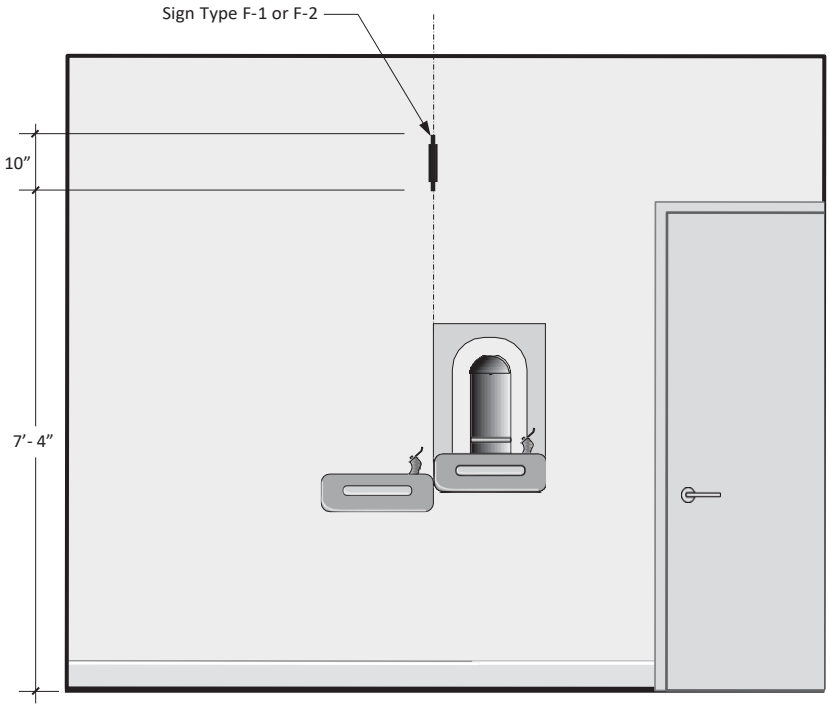

Sign Type G

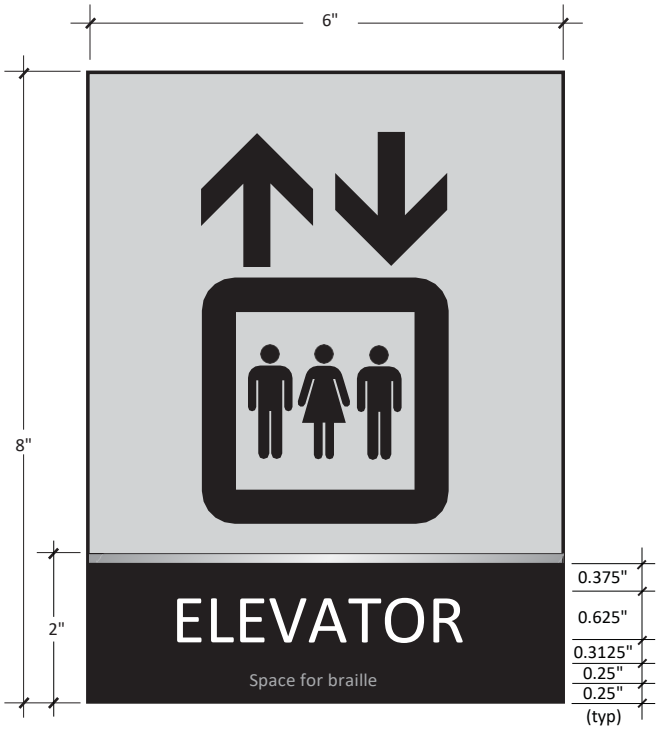
6"
8"
2"
ELEVATOR
Space for braille
0.375"
0.625"
0.3125"
0.25"
0.25"
(typ)

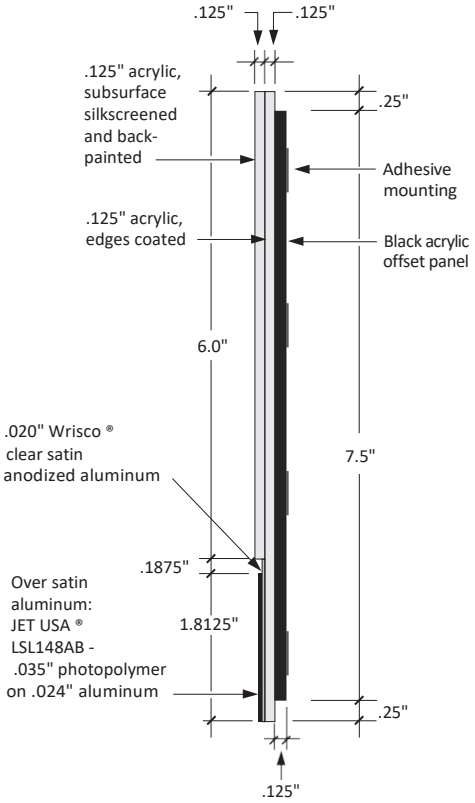
.125"
.125"
.125" acrylic, subsurface silkscreened and back-painted
.25"
Adhesive mounting
.125" acrylic, edges coated
Black acrylic offset panel
6.0"
.020" Wrisco ® clear satin anodized aluminum
7.5"
.1875"
Over satin aluminum: JET USA ® LSL148AB - .035" photopolymer on .024" aluminum
1.8125"
.25"
.125"

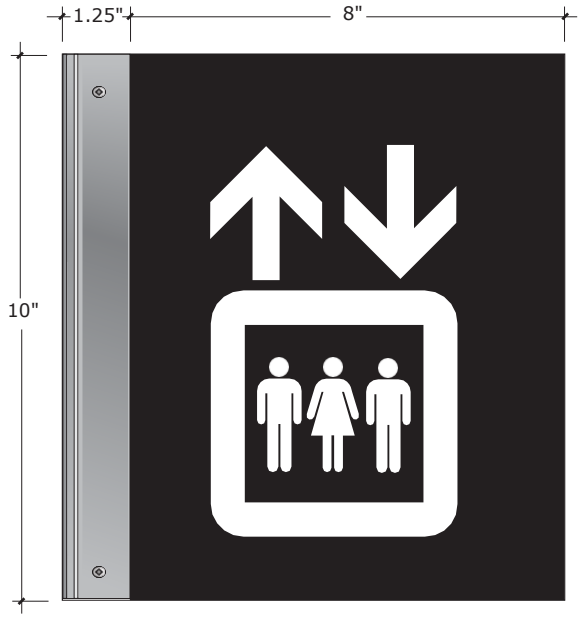
1.25"
8"
10"

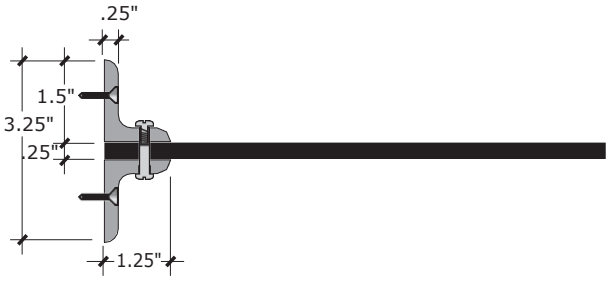
.25"
1.5"
3.25"
.25"
1.25"

Sign Type H

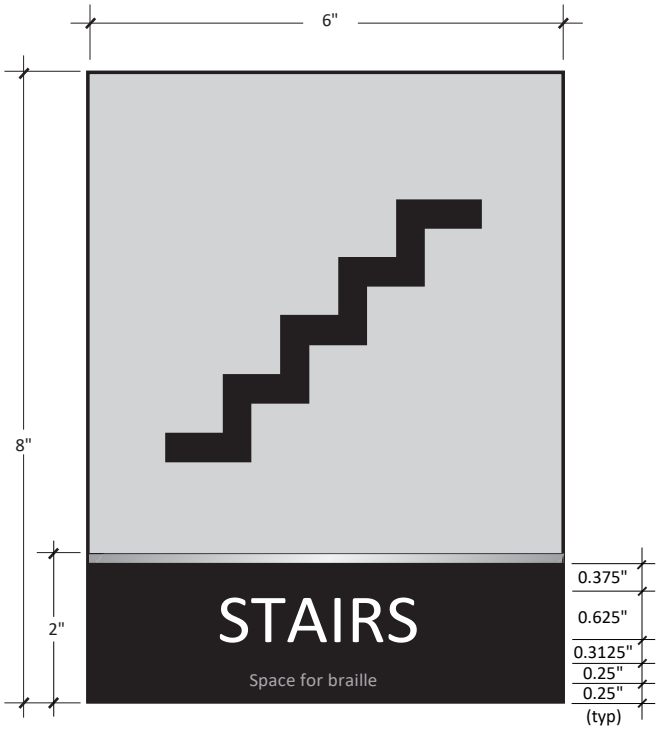
6"
8"
2"
STAIRS
Space for braille
0.375"
0.625"
0.3125"
0.25"
0.25"
(typ)

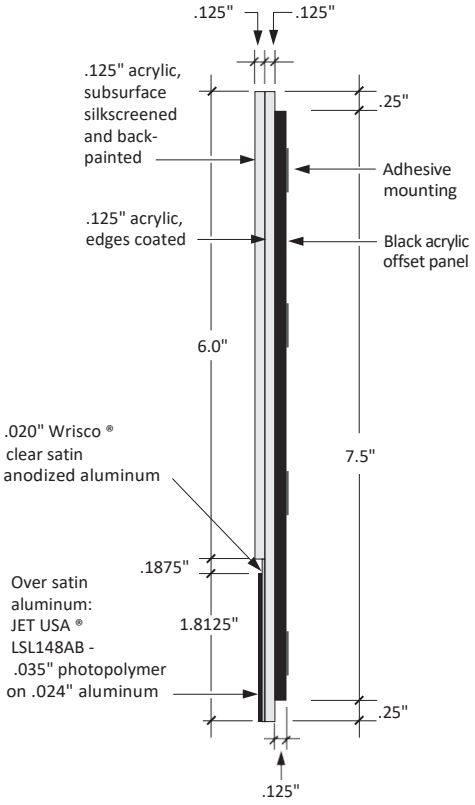
.125"
.125"
.125" acrylic, subsurface silkscreened and back-painted
.25"
Adhesive mounting
.125" acrylic, edges coated
Black acrylic offset panel
6.0"
.020" Wrisco ® clear satin anodized aluminum
7.5"
.1875"
Over satin aluminum: JET USA ® LSL148AB - .035" photopolymer on .024" aluminum
1.8125"
.25"
.125"

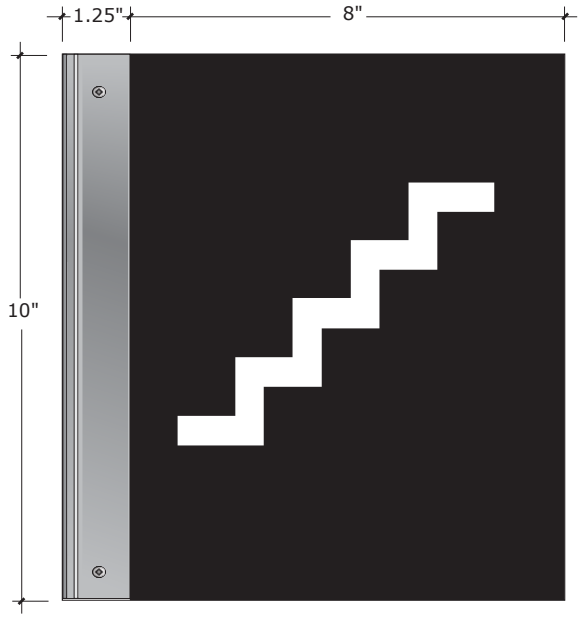
1.25"
8"
10"

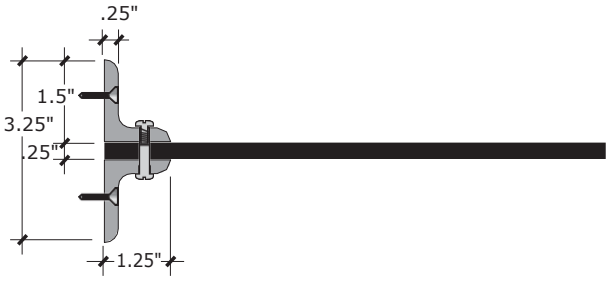
.25"
1.5"
3.25"
.25"
1.25"

Sign Type J



Sign Type K

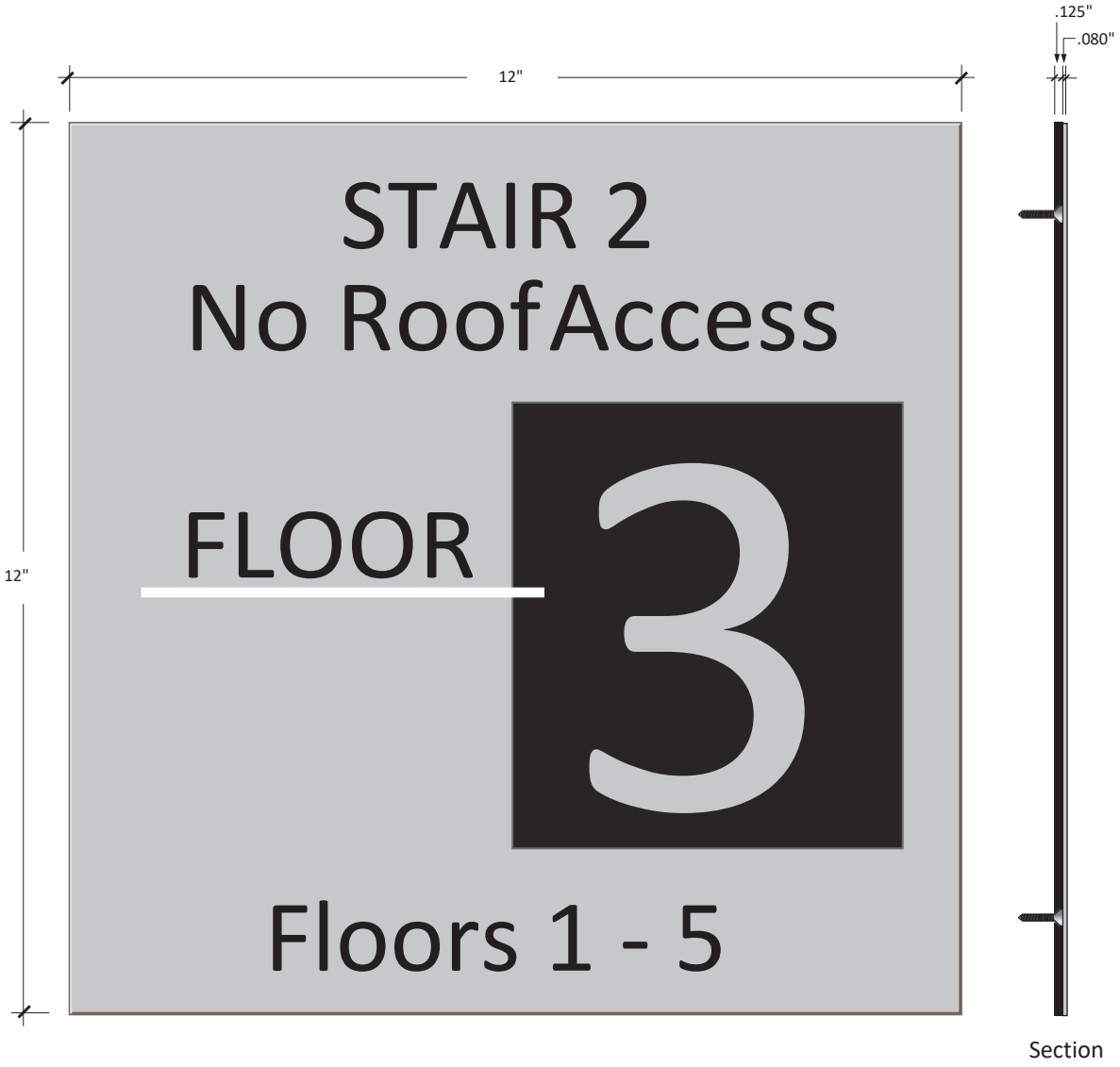

Sign Type N-1



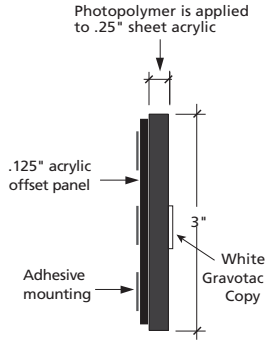

Typical Section

Sign Type N-2

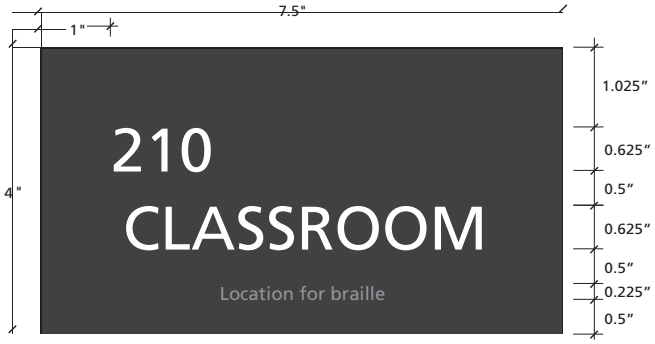

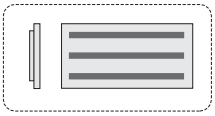

Mounting Advisory
Scale: None

Sign Type N-3

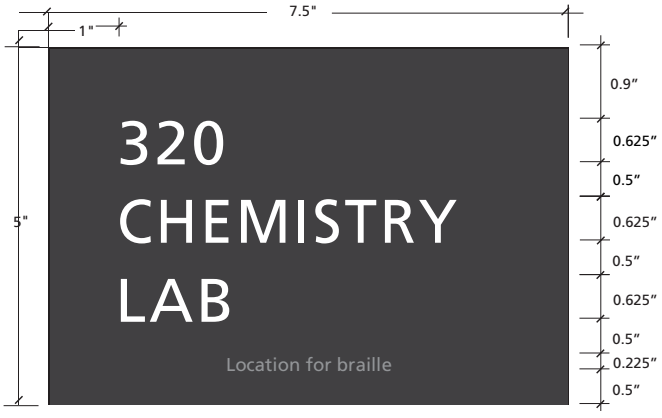

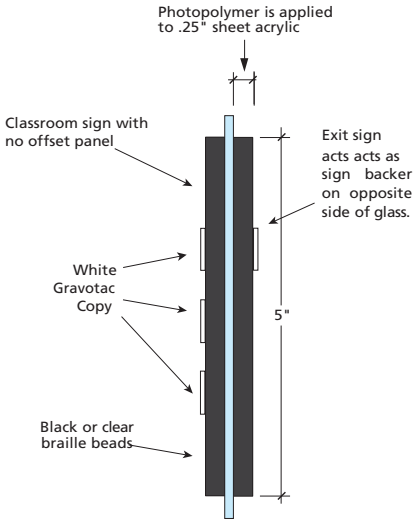

Typical Section

Sign Type P

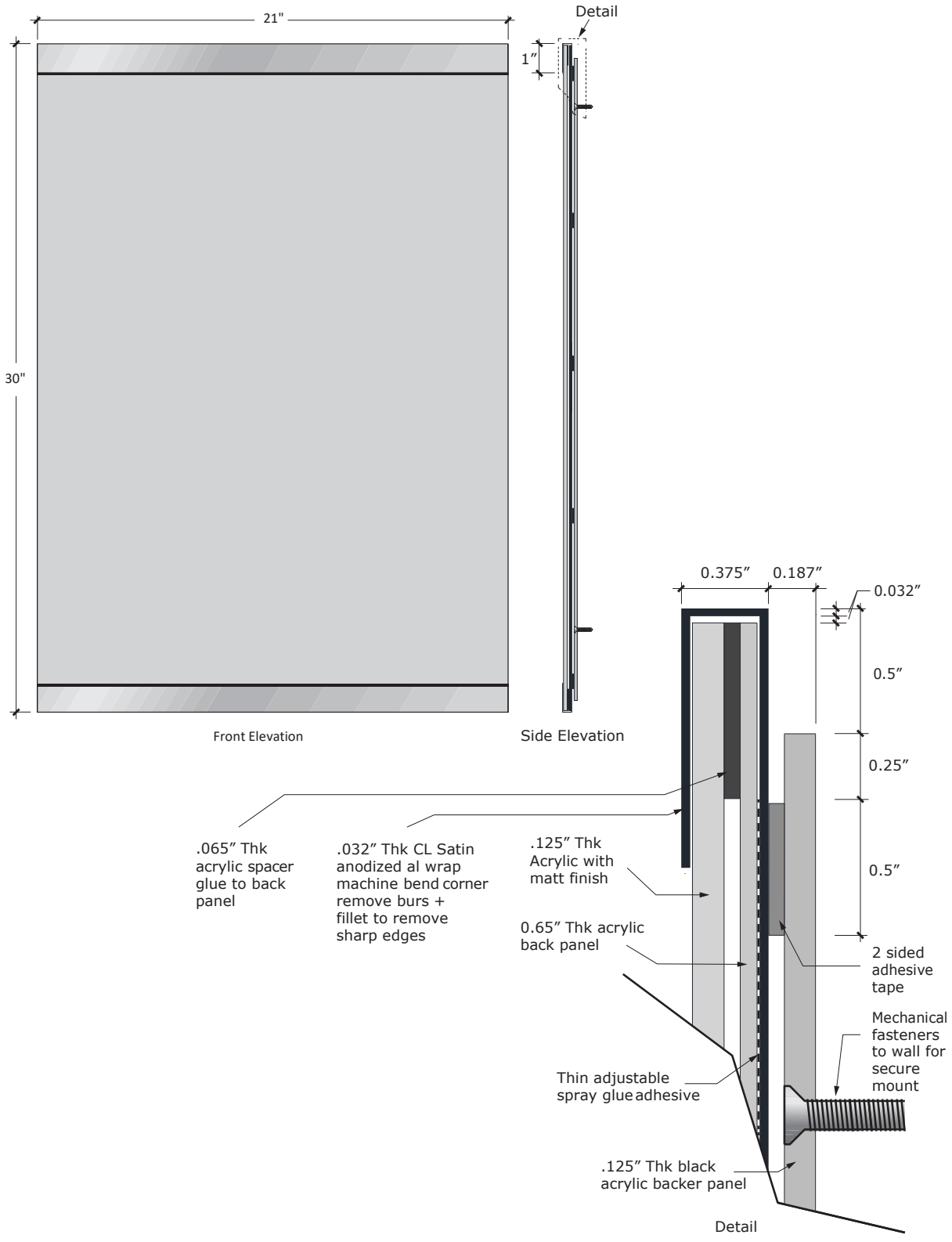
21"
30"
Front Elevation
Detail
1"
Side Elevation
0.375"
0.187"
0.032"
0.5"
0.25"
0.5"
.065" Thk acrylic spacer glue to back panel
.032" Thk CL Satin anodized al wrap machine bend corner remove burs + fillet to remove sharp edges
.125" Thk Acrylic with matt finish
0.65" Thk acrylic back panel
2 sided adhesive tape
Mechanical fasteners to wall for secure mount
Thin adjustable spray glue adhesive
.125" Thk black acrylic backer panel
Detail

Sign Type Q-1

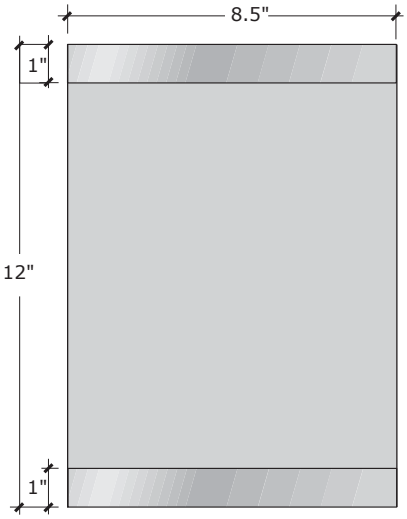

Front Elevation



Side Elevation

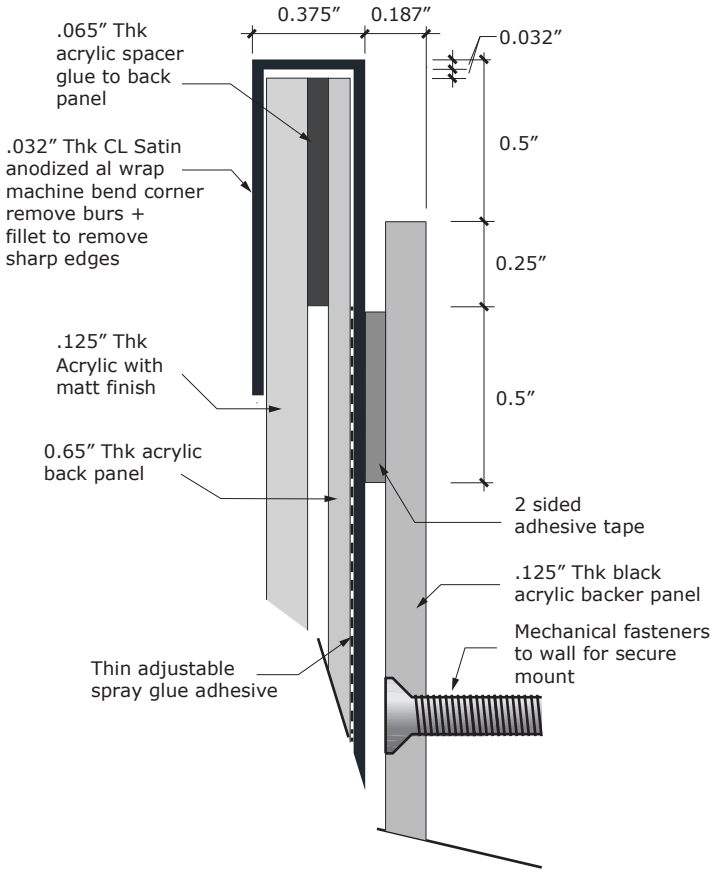

Sign Type Q-2

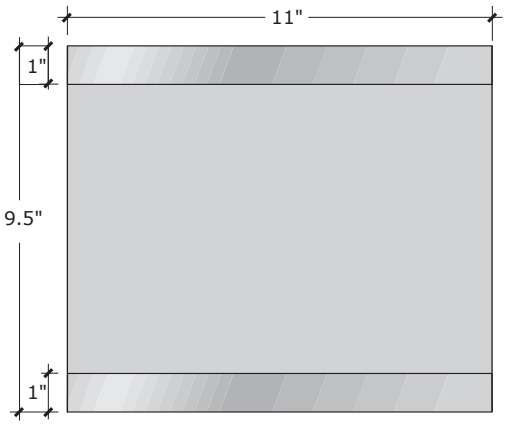

Front Elevation

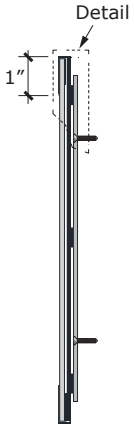

Side Elevation

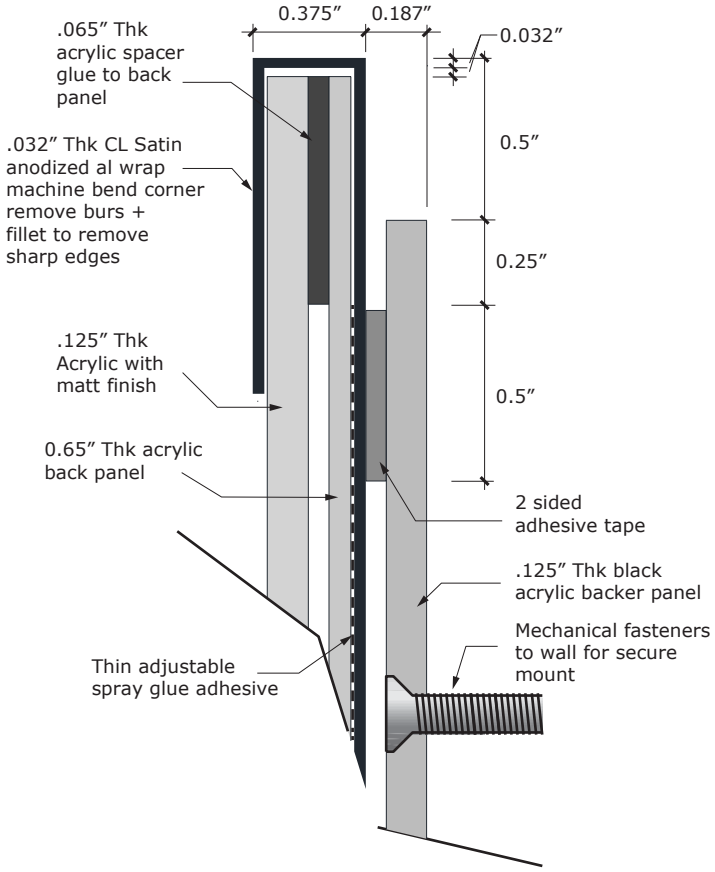

Sign Type R-1

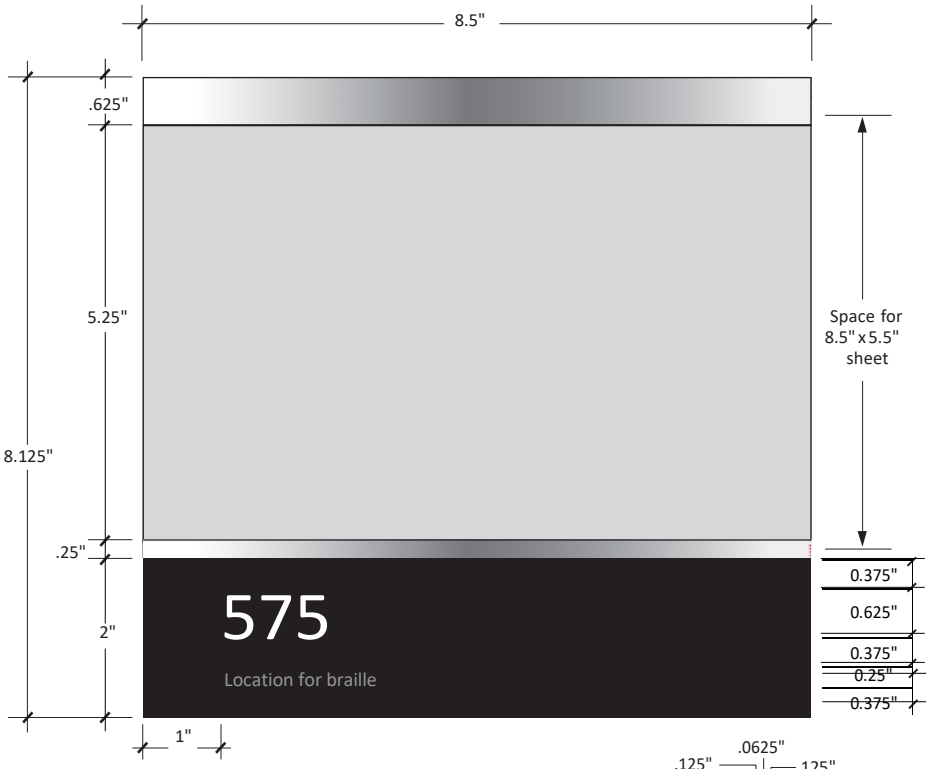

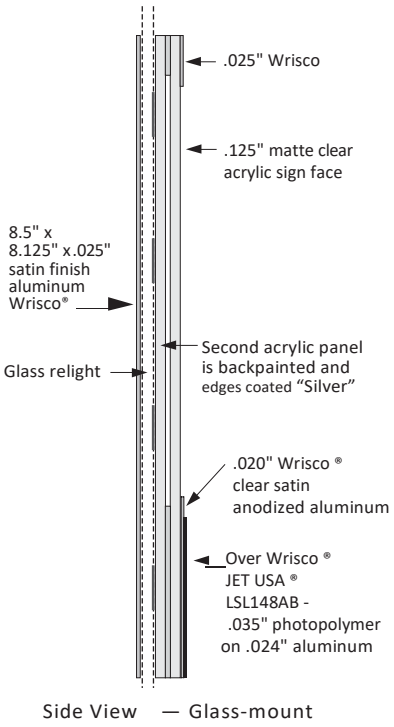

Side View — Glass-mount

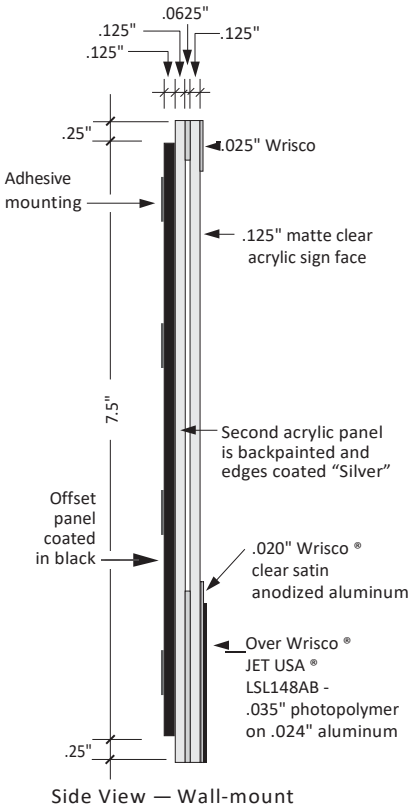

Side View — Wall-mount

Sign Type R-2

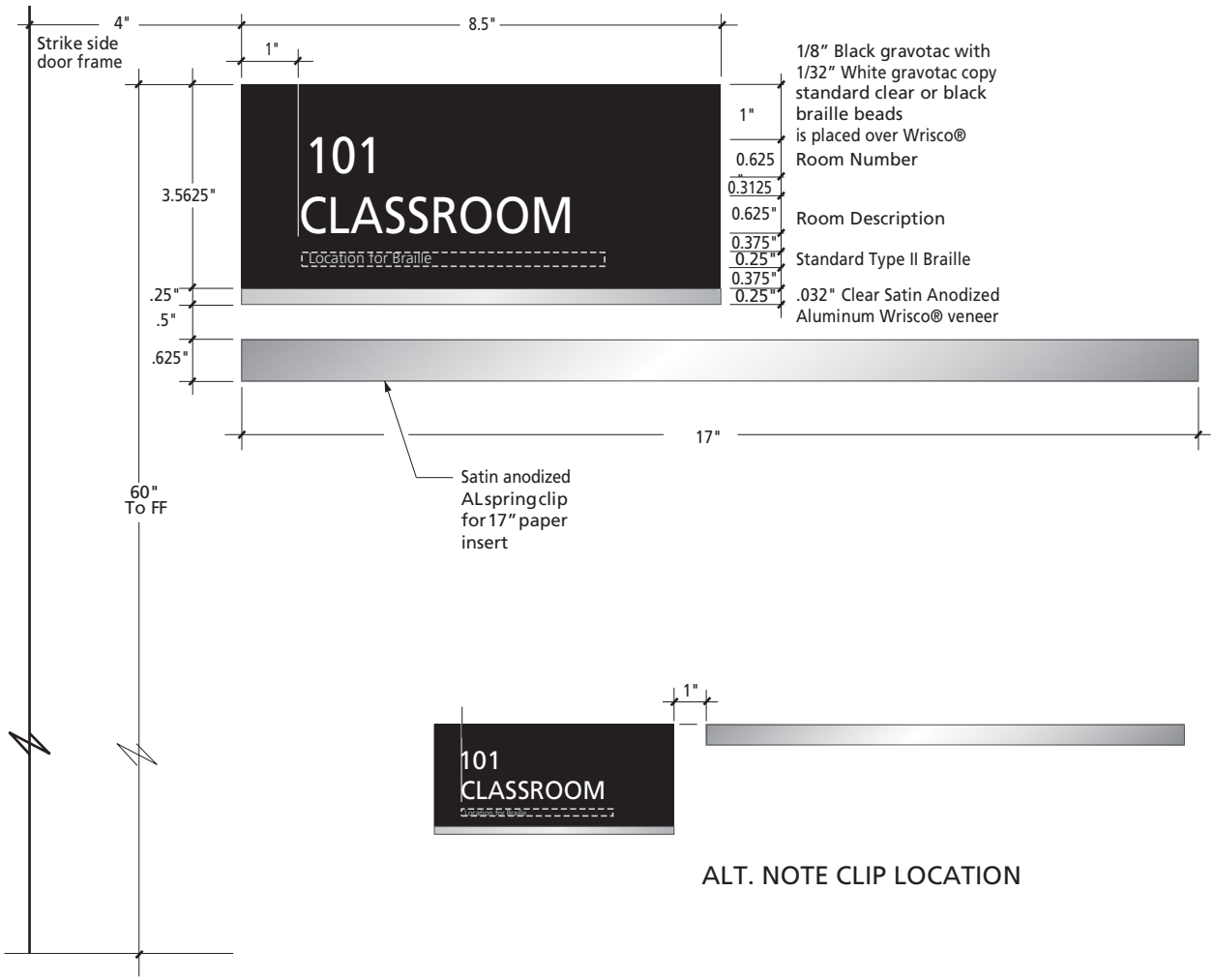

ALT. NOTE CLIP LOCATION

Sign Type S

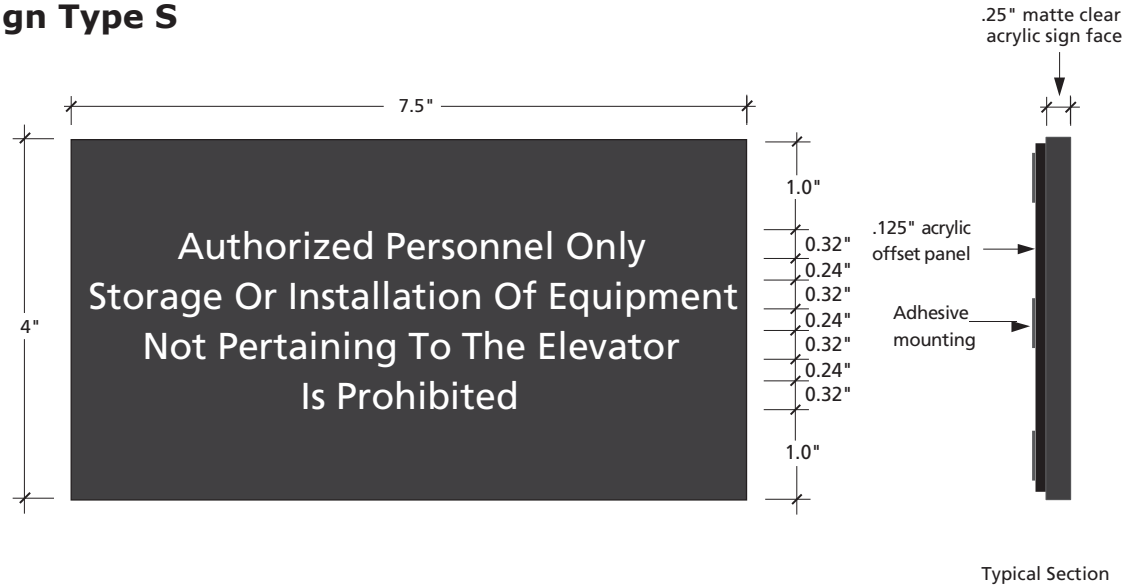

Typical Section

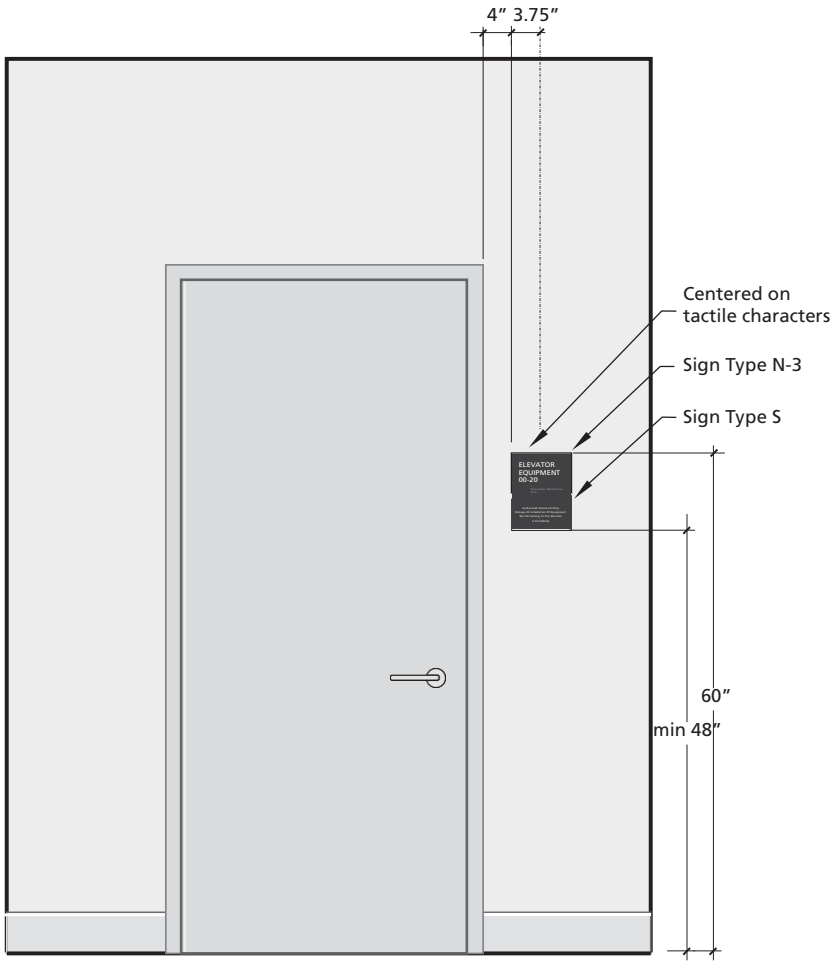

Sign Type T

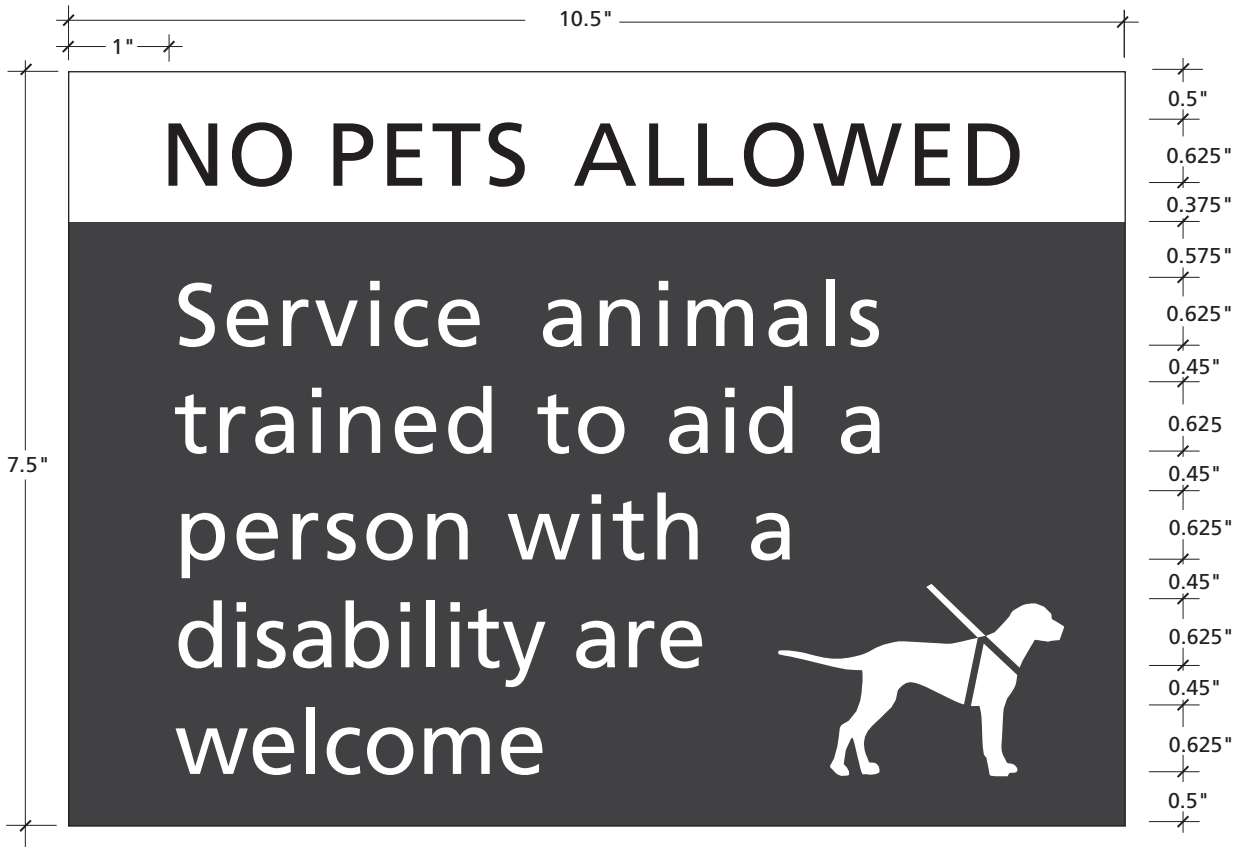

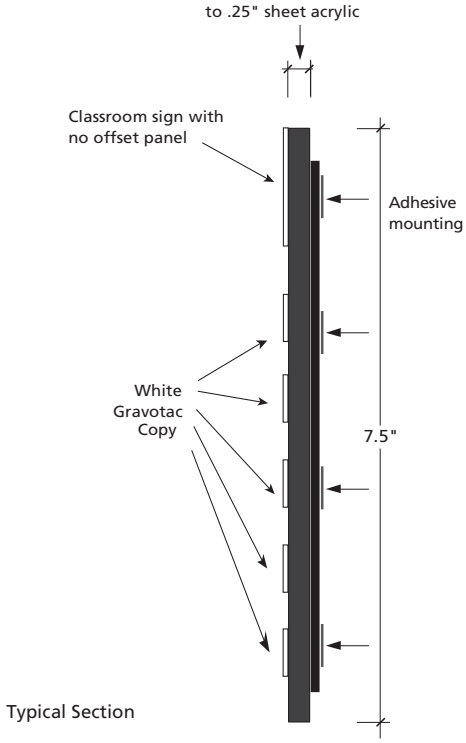

Typical Section

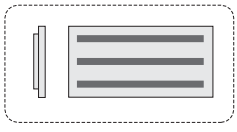

Mounting Advisory
Scale: None

Sign Type U-1



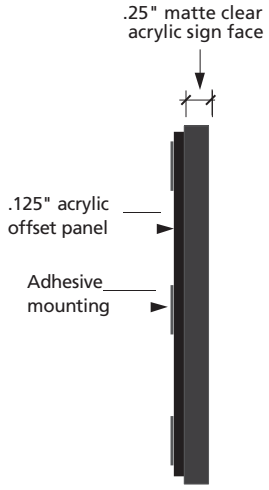

Typical Section

Sign Type U-2



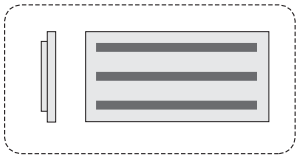

Mounting Advisory

Scale: None

Sign Type V

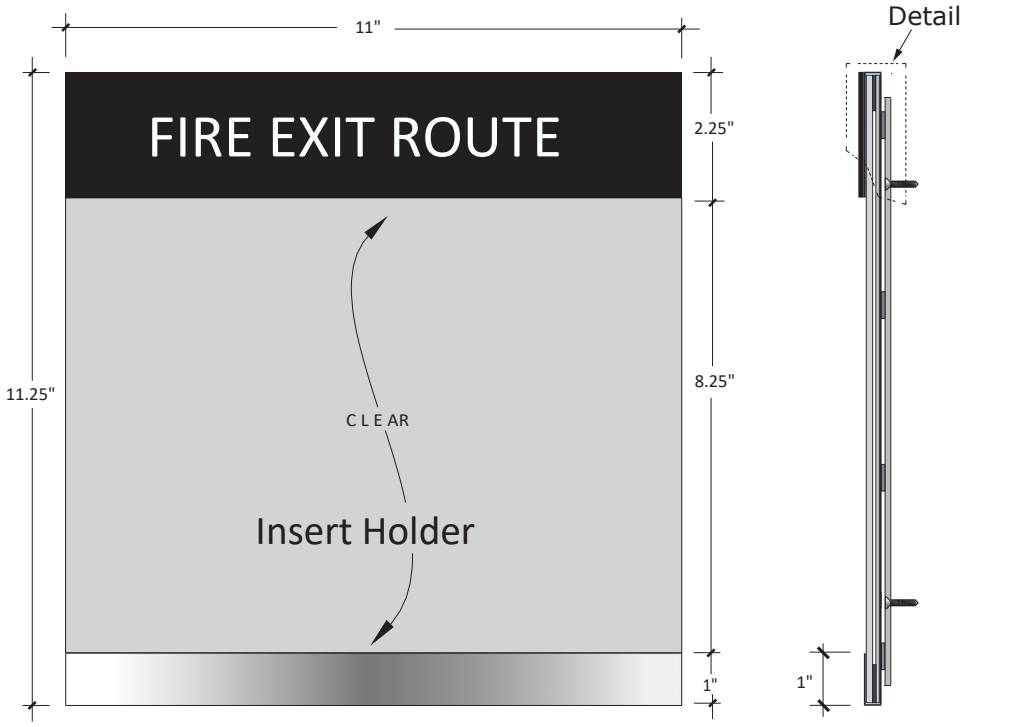
11"
FIRE EXIT ROUTE
2.25"
11.25"
8.25"
CLEAR
Insert Holder
1"
Detail
1"
Side Elevation

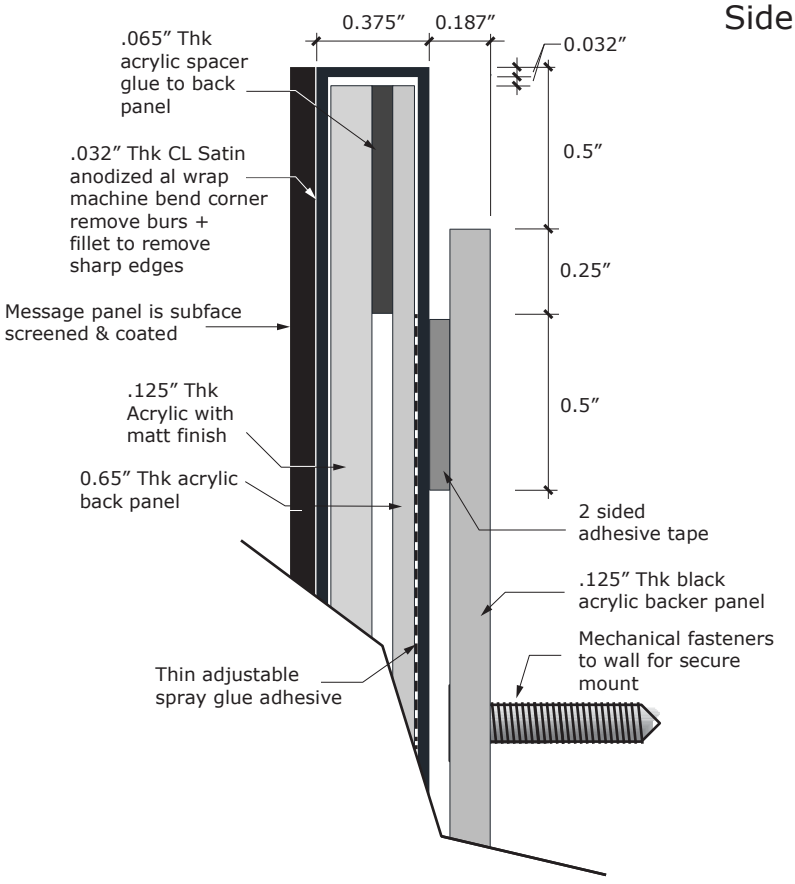
0.375"
0.187"
0.032"
.065" Thk acrylic spacer glue to back panel
.032" Thk CL Satin anodized al wrap machine bend corner remove burs + fillet to remove sharp edges
Message panel is subface screened & coated
.125" Thk Acrylic with matt finish
0.65" Thk acrylic back panel
Thin adjustable spray glue adhesive
0.5"
0.25"
0.5"
2 sided adhesive tape
.125" Thk black acrylic backer panel
Mechanical fasteners to wall for secure mount

Sign Type W

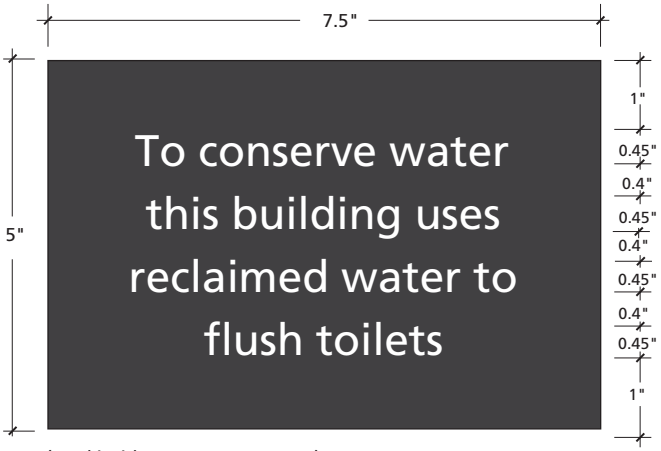

(used inside women's restroom)

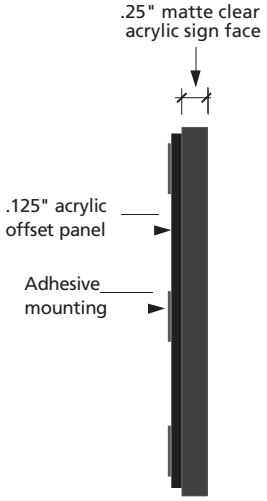

Typical Section

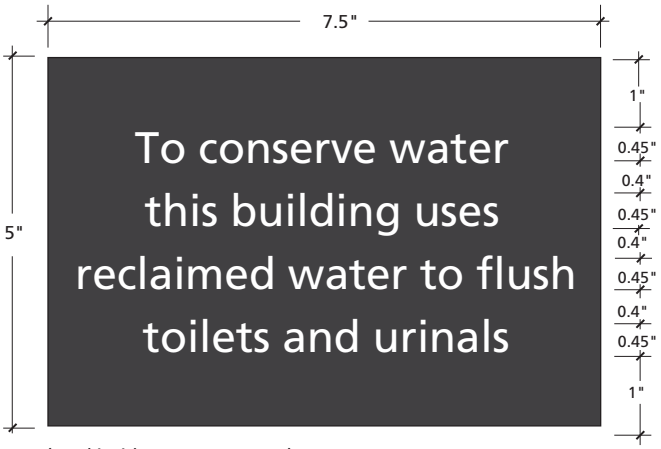

(used inside men's restroom)

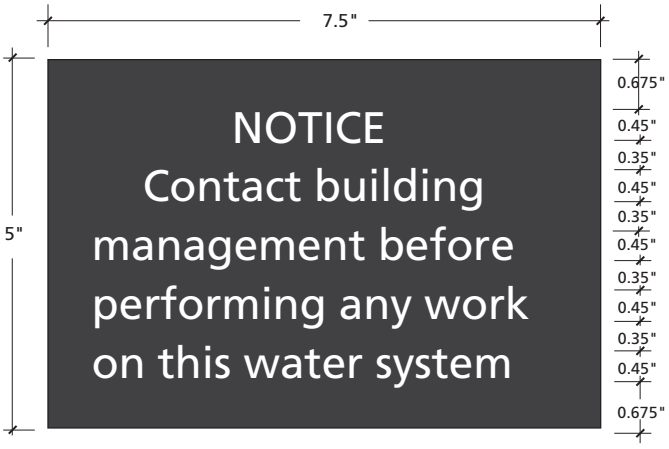

(used at valve access panels)

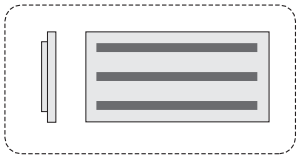

Mounting Advisory

Scale: None

Sign Type X

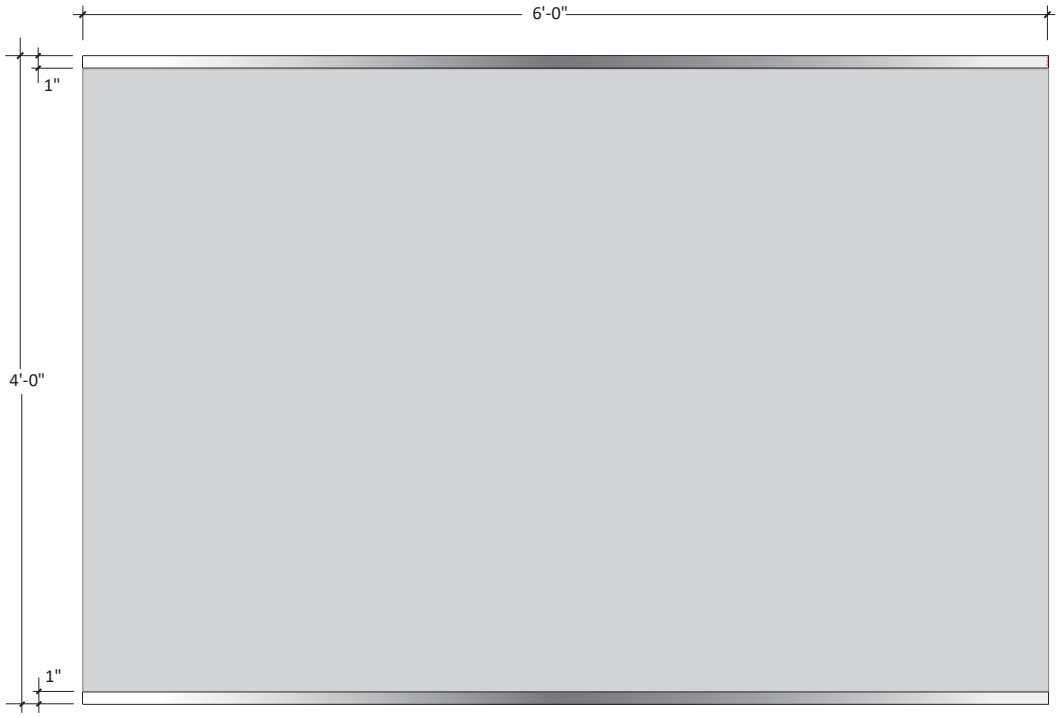

Front Elevation



Side Elevation

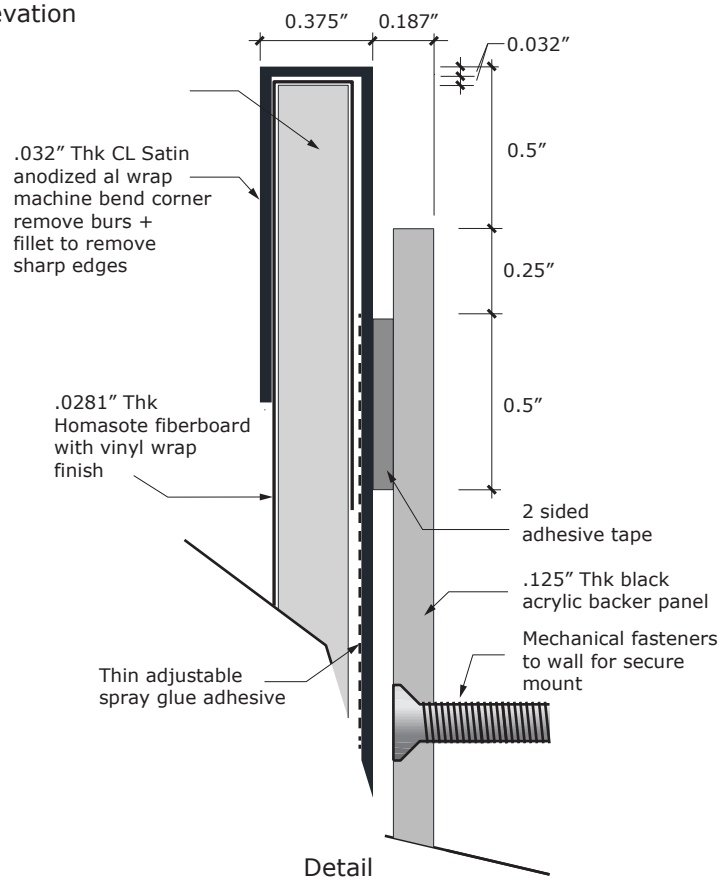

Detail

Sign Type Z (Project Information Sign)

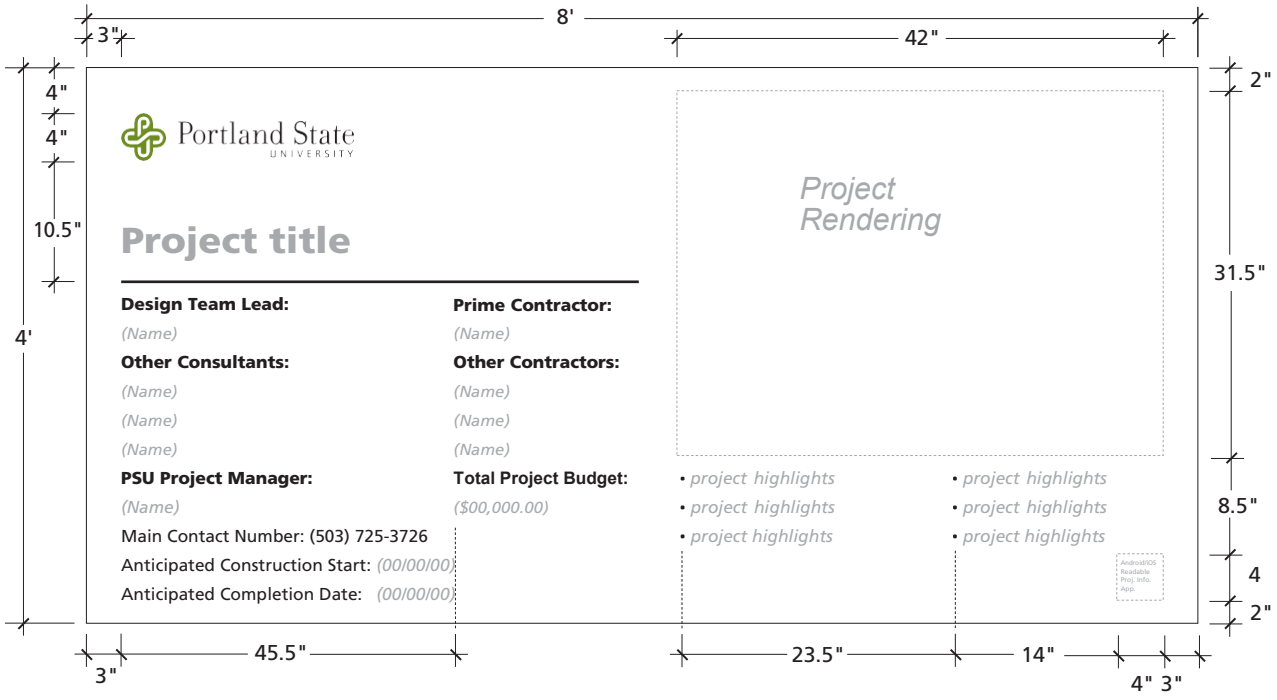

- Project title font: Frutiger LT Std 75
  Size: 230 pt or 2.4 inch height

- Subtitle font: Frutiger LT Std 75
  Size: 108 pt or 1.05 inch height

- Text font: Frutiger LT Std 55 Roman
  Size: 108 pt or 1.05 inch height

- Gap between lines: 1.375 inch
  Distance from line to next line: 2.5 inch

  Note: Mount sign on construction fence or 4 x 4 posts at location directed by the CPC Project Manager

PORTLAND STATE UNIVERSITY

STYLE GUIDE



Version 1.0 | February 12, 2020

Portland State
UNIVERSITY

INTRODUCTION

WELCOME TO THE PORTLAND STATE UNIVERSITY STYLE GUIDE

The Portland State University Brand is much more than a logo or history. Our brand is what students, parents, faculty, alumni, peers, and outside observers all think, feel, and respond to when they encounter anything and everything Portland State University.

This document is intended for those responsible for creating communication materials for Portland State University, from student information packets, to website content and more. Great brands are instantly recognizable, stand for something, and speak a common language, even when they speak to different audiences. Brands build strong bonds with their audiences through consistency.

By using established brand standards, our look and feel will remain consistent. The boldness of our brand is transferable between various media formats, flexing naturally across digital, print, social, mobile, and web. Maintaining a strong, unified voice ensures that our brand won't be diluted or misconstrued. Amid the complexities that make up Portland State University, there are very few times that we ask our community to be single-minded.
This is one of them.

QUESTIONS?

Need approved fonts, logos, graphic elements, or additional information?
To obtain more resources, contact:

Julie Smith
Director of Marketing, University Communications
Portland State University
T: 503-725-4467
E: smithju@pdx.edu

CONTENTS

PG 4 BRAND POSITIONING

PG 5 PERSONALITY & TONE

PG 6 CREATIVE PLATFORM

PG 7 AUDIENCES

PG 8 BRAND VOICE

PG 10 IDENTITY SYSTEM

PG 26 DESIGN DNA

PG 27 TYPOGRAPHY

PG 28 TYPE APPLICATIONS

PG 33 COLOR

PG 34 COLOR APPLICATIONS

PG 38 GRAPHIC ELEMENTS

PG 43 PHOTO TREATMENT

PG 44 PHOTOGRAPHY

PG 45 APPENDIX

BRAND POSITIONING

After an in-depth qualitative research effort, we aligned on a brand positioning statement for Portland State University. This brand positioning statement is not a tagline and not intended as outward facing messaging, but rather encapsulates the essence of the institution. Influenced and formed by support pillars, it serves as an internal reference guide to marketing communications.

UNIQUE SELLING PROPOSITION

WHERE FORWARD IS IN FOCUS

Portland State University is an urban institution in a vibrant, progressive, and ever-evolving city. We're dedicated to building on our momentum, by continuing to create better tomorrows and driving toward a more equitable and sustainable future. Our mission is clear: Our students and faculty possess an intrinsic commitment to pioneer, innovate, and overcome. Through resiliency and collaboration, nothing will stop us. This is an institution where forward is in focus.

STRATEGIC PILLARS

EDUCATION: REDEFINED
(WHO WE ARE)

Different students demand a different education. We're constantly innovating our model with the programs, partnerships, and adaptability to equip every student with the tools and momentum for success. In a vibrant urban setting that makes it all possible.

TRANSFORMING PORTLAND & BEYOND
(WHAT WE DO)

We're fueling the transformation of this city; investing, collaborating, and building the future here, together. We're holding ourselves to a higher standard, solving Portland's biggest challenges through world-class research with world-wide application.

BETTER OUTCOMES MATTER
(WHY WE DO IT)

We believe in expanding opportunity and creating a more equitable future for everyone who comes to PSU. We're fostering and cultivating an environment that allows everyone to achieve the goals that matter, no matter how big or small.

BRAND PERSONALITY & TONE

The positioning statement is complemented by tone words that reflect the personality of the organization. Tone words—the personality of the PSU Brand—detail how the brand looks and feels to varying audiences, while brand voice articulates it.

The tone will shift depending on the audience, but all communications—from social media posts, to printed materials—should use the following words as a guide. When speaking to different audiences, certain tone words will be emphasized or understated.

BOLD | ACTIVE | CREATIVE | DRIVEN | SUPPORTIVE | ENGAGING

BRAND NARRATIVE

We were born different, founded on the principle of access. Because we're confident in who we are, we move forward with ***BOLD*** resolve to effect positive change. There is a restless, ***ACTIVE*** energy in the work we do and the way we do it. Our nimble, enterprising spirit propels ***CREATIVE*** ideas and theories into innovations and impactful solutions. We redefine excellence and expand opportunity to meet today's needs and serve our students, Portland, and the world. We're ***DRIVEN*** to overcome whatever challenges stand in our way. As a community, we do all that we can to help everyone achieve their goals, regardless of their background or circumstance, as part of a ***SUPPORTIVE*** culture. We are outwardly focused, ***ENGAGING*** the Portland community and external partners to join us in our mission—pursuing a more equitable, sustainable future. And we offer a different kind of opportunity, one where we can build something meaningful together.

CREATIVE PLATFORM

CONCEPT

Our brand concept is articulated with a rationale that defines who we are as an institution. It's a good idea to read through the rationale several times. The more familiar you are with it, the easier it will be to create compelling messages.

WHY NOW?

The world is facing defining issues like inequality, poverty, and climate change.
It's not enough to watch the needle move. We need to give it a shove.
We have the opportunity to lead with ethical education, catalyzing a social movement.
Now, more than ever, we need to own our city and our story.

EMBOLDEN EACH & EVERYONE

The best method for challenging the status quo is to provide another way. Challengers work harder, think nimbly, and deliver more than expected. Because their goal is not only to be bold, but to embolden others, helping them to create impact in their own lives and the lives of those around them. PSU empowers people to collectively aim higher and to rally around each other as we stride into a more meaningful future for everyone. Because the only thing that stands between us and a better world for all of us is the will to create it.

AUDIENCES

While our brand has one voice, the groups of people who interact with it are varied. To help understand who they are, and how to reach them, we have placed them into two categories.

PRIMARY AUDIENCES

- Current and Prospective Students
- Alumni & PSU Community
- Prospective Donors
- Parents and Guidance Counselors

SECONDARY AUDIENCES

- Current and Prospective Faculty, Staff, and Administrators
- Regional Community (City of Portland and Region)
- Peer Institutions, Practitioners, Legislators, Businesses and Partner Organizations
- Local, Regional, and National Media

AUDIENCE TONE

While the brand should contain the characteristics of the tone words, the degree to which the audiences feel them should vary. Think about putting these personality traits on an equalizer that allows you to dial up or dial down certain elements.

Throughout this guide, we offer examples of how to reach specific audiences from a tone, typography, color, photography, and graphic element perspective.



Prospective Students



Alumni and Donor Community

BRAND VOICE

The Portland State University Brand is about a creative community and innovative environment working together to expand what's possible in Portland and beyond. The voice comes from a driven, inclusive, and progressive place. PSU's brand is about putting one's beliefs in action, and gaining a sense of belonging and the confidence to overcome challenges in unexpected ways.

Just as Portland State University flexes to meet the needs of today's students, the brand voice flexes across audiences, subject matter, and messaging goals. Language is always active and should create a sense of shared momentum.

The copy should follow the brand tone: engaging language that is action-oriented. The copy itself should entice the reader to make connections between the brand voice and Portland State University's innovative model for education.

HEADLINES

Your headline is your first and best opportunity to grab the reader's undivided attention and get them to commit to the rest of the story. It's important not to pack too much information into the headline. Be decisive, yet welcoming. While a headline may contain a sense of warmth, humor, human truth, or all three at once, there should be only one twist, one play that draws the reader in and leaves them wanting to know more. Headlines should push beyond the expected, using language that drives curiosity.

Headlines for Portland State University should communicate quickly and neatly what sets us apart from any other institution on the planet. They can be rooted in a sense of place—depending on the story and audience—but must also capture the spirit of determination, inclusion, and inspiration. This will help guide and develop the tone over time.

Headline Examples

FORGET IF. HOW.

THIS IS A RESOUNDING YES

IT'S NOT IDEALISTIC IF YOU'RE DOING IT

TAKE IT TO THE STREETS

CHANGE ISN'T A MAYBE. IT'S A MUST.

STAND WITH THOSE WHO STAND UP FOR TOMORROW

BOLD IS A CHOICE, NOT A TRAIT.

BRAND VOICE (cont.)

BODY COPY

Body copy is where tone and style will flex the most. Let's look at the tone words again:

BOLD | ACTIVE | CREATIVE | DRIVEN | SUPPORTIVE | ENGAGING

Think of these words not as a checklist, but as a spectrum. Depending on the execution, you can turn some tonal elements down and others up. For example, when writing for an undergraduate audience, the tone and style should be at its most optimistic (Bold, Active), conveying a sense of community and momentum (Supportive).

Within these guidelines, there are opportunities to write compelling copy that gets the message across. See how the tone can flex in the examples to the right.

Undergraduate Student Example 1 [Bold, Active, Supportive]

STAND WITH THOSE WHO STAND UP FOR TOMORROW

WHEN IT COMES TO POSITIVE IMPACT, IT'S TIME TO THINK BIGGER AND BOLDER. THIS IS OUR CRUCIAL CALL TO ACTION.

Portland State University is more than this city's public research university. It's the testing ground for ideas and projects that show the world how different is done. Our innovative approach infuses education with creative problem-solving and interdisciplinary collaboration. Choose from 200+ degree programs in Oregon's most innovative, diverse, and affordable research university.

Undergraduate Student Example 2 [Bold, Active, Supportive]

IT'S NOT IDEALISTIC IF YOU'RE DOING IT

This is the laboratory where you challenge what is, with what could be, breaking a few boundaries along the way. Inspired by those around you, and inspiring others to reimagine where it is that we truly want to go.

Graduate Student Example [Driven, Creative, Engaging]

GO FOR GROUNDBREAKING

Portland State University is recognized by U.S. News & World Report as among the top schools for graduate studies because we offer innovative classes and coursework, collaborative experiences, and amazing opportunities for research, internships, practicums, and field studies that forward career goals.

Alumni Example [Driven, Supportive, Engaging]

WHERE THERE'S A WILL, THERE'S A WAY FORWARD

Portland State University is all about taking action to effect positive change. We're proud that our graduates are passionate about their beliefs and moving the world forward.

Donor Example [Bold, Driven, Engaging]

APPETITE FOR INNOVATION

Join guest Lori Heino-Royer, head of business innovation at Daimler; groundbreaking researchers, esteemed leaders, and change-agents from across the city for the 3rd installment of Portland State University's Feeding Progress Dinner & Discussion Series.

TRADEMARK AND LICENSING

Portland State authorizes the use of the University's name, logo, and athletic marks on merchandise through a formal licensing and trademark program administered in partnership with the Collegiate Licensing Company (CLC).

VENDORS

Vendors interested in producing merchandise with the University's trademark must become a licensed vendor through the CLC.

UNIVERSITY DEPARTMENTS AND STUDENT GROUPS

University departments and student groups who intend to sell trademarked merchandise are required to order products from a licensed vendor or through either the PSU Bookstore or the Smith Union Market. Merchandise produced by departments and student groups for promotional purposes also need to order products through a licensed vendor; however, University Communications may grant approval for specialty vendors upon request.

For more information, contact: Tracy Weber, Collegiate Licensing Coordinator, 503-725-8555, webert@pdx.edu

PROPER USE OF ® AND ™ FOR MERCHANDISE

Whether for sale or not, all merchandise produced with a University trademark must carry the appropriate mark:

®

PSU logo
PSU logomark
Portland State University (verbiage)

™

PSU seal
Portland State (verbiage)
pdx.edu (verbiage)
Let Knowledge Serve the City (verbiage)
Let Knowledge Serve (verbiage)

All athletic logos and marks
Portland State Vikings (verbiage)
Go Viks (verbiage)
PSU Vikings (verbiage)
Viking Gear (verbiage)

IDENTITY REPRODUCTION

LOGO STRUCTURE

The Portland State University logo is a signature consisting of two components: the logomark and the logotype. These two components are always placed in a fixed relationship and should never be altered, modified, or redrawn

The horizontal signature is the preferred format for most applications. When space limitations or size of reproduction preclude the use of the primary configuration, the alternate vertical configuration may also be used. Any other configuration of the signature is not authorized for use.

The logomark can be used alone in certain limited circumstances (mainly for apparel and promotional items). The logotype can never appear without the logomark.

PRIMARY SIGNATURE – HORIZONTAL



ALTERNATE SIGNATURE – VERTICAL



SINGLE LOGOMARK – LIMITED USE

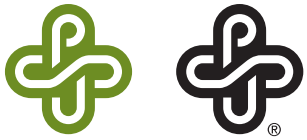

The single logomark should generally only be used in on-campus promotion, merchandise applications, or instances where the context is obviously understood to be Portland State University.

MINIMUM CLEAR SPACE

To ensure its integrity and visibility, the Portland State University logo should be kept clear of competing text, images, and other marks. It must be surrounded on all sides by adequate clear space—a space equal in size to the cap height of the logotype (the height of the capital "P" in Portland State).

This is a minimum clear space. Ideally, the logo should be surrounded by additional white space whenever possible.





SIZE REQUIREMENTS

RECOMMENDED SIZE

The suggested size for the Portland State University logo is 2.25" on a typical 4" x 9" rack brochure, and 2.5" on larger (e.g., 8.5" x 11") publications. For electronic applications, the suggested size for the logo is 2.5" in PowerPoint and 3" on the Web.

MINIMUM SIZE

Minimum size refers to the smallest dimensions allowed for the Portland State University logo. It is stated at minimum width. The minimum size for the horizontal logo is 1.75", and the minimum size for the vertical logo is .625".
For electronic applications, the minimum size for the horizontal logo is 180 pixels, and the minimum size for the vertical logo is 60 pixels.

Certain circumstances may require that the logo be reproduced smaller than the specified minimum size. In this case, the special-use logo may be used at a minimum size of 1" and maximum size of 1.75". The special-use logo has a modified logomark, logotype, and configuration that will reproduce better at a smaller scale.

RECOMMENDED PRINT SIZE



2.5" width (on 8.5" x 11" publications)

MINIMUM PRINT SIZE



1.75" width



.625" width

MINIMUM SCREEN SIZE



180 pixels



60 pixels

SPECIAL-USE LOGO



1"–1.75" width

LOGO USAGE

CHOOSING THE CORRECT LOGO

The preferred usage of the Portland State University logo is the two-color version on a white background. Use the horizontal rather than the vertical logo when possible. Use the two-color version rather than the one-color version when possible. The reverse logo treatment may be used on a dark background if sufficient contrast exists.

PREFERRED USAGE

ACCEPTABLE USAGE

REVERSE USAGE

SPECIAL-USE "ACCENT GREEN" LOGO

The "accent green" logo may be used only over a solid field of PSU Green. The accent green logo cannot be used over any other background color.

LOGO FILE NAMES AND TYPES

LOGO FILE NAMES

Use this naming convention guide to select the appropriate logo for reproduction. The following file types are available for download at www.pdx.edu/university-communications:

For high-quality printing:
EPS—These files can be imported into or opened through page layout and illustration software such as InDesign, QuarkXPress, Freehand, Illustrator, or Photoshop. Since EPS files are vector art, they offer the highest possible resolution and should be used for high-quality print applications and posters or large-scale graphics.

For word processing and presentation software:
TIFF or JPEG—These images can be placed in applications such as Microsoft Word, Publisher, and PowerPoint or used online. Since these are bit-map files, they can lose resolution when used at larger sizes and may not be able to display with transparent backgrounds in all applications.

For website and online use:
PNG—This file format is used for online graphics and can support transparent backgrounds. This format is generally not high enough resolution for print.



BACKGROUND GUIDELINES

ACCEPTABLE CONTRAST

Background colors and images can easily overpower or compete with the Portland State University identity. The preferred treatment of the Portland State University logo is the two-color horizontal logo over an open, white background.

If the logo must be placed on a dark background, you may use a reverse (knockout) version of the logo to improve readability. The logo may be placed over a background image or pattern only if there is sufficient contrast to distinguish the logo from outside elements.

RECOMMENDED PRINT SIZE

White is the preferred background color for the logo.

The logo may be used over light solid backgrounds.



Always position the logo over an image in a way that maintains its legibility.

The reverse (knockout) version of logotype should be used when placed over dark colors.

RECOMMENDED PRINT SIZE

Never use the primary logo over a color that renders it unreadable.

Never use over a background that renders the logo unreadable.

Never use over a background color that renders the logo unreadable. It may be preferable to switch to the all-white reverse version to improve readability.



Never use the logo over an image in a way that renders it unreadable.

UNACCEPTABLE USES

PROTECTING THE LOGO

Always use original Portland State University logo artwork. It should never be edited, recreated, or combined with other graphic or typographic elements. Below are some examples of unacceptable usage:

Never substitute type in the logo.



Never alter the colors in the logo.



Never outline elements of the logo.



Never change the size relationships or positioning of the logo elements.



Never use the horizontal lockup to create a vertical lockup.



Never flip or reposition elements of the logo.



Never resize any portion of the logomark or logotype.



Never use the PSU logotype alone.



Never alter the logomark in any way.



Never add effects such as bevels, textures, or drop shadows.



Never add effects such as a glow.



Never fill in the interior of the logo.



APPROVED PSU SEALS AND LOGOS

UNIVERSITY SEAL

The University seal is limited to use on official University documents such as diplomas and certificates and for Commencement and some communications from the President's Office. When the seal is reproduced, it must not be altered, combined with another logo, or surrounded by type, photography, illustration, or other devices.

ATHLETICS

The PSU Athletics logo and secondary Viking mark should only be used by the Athletics Department. To see the complete Athletics identity guidelines, visit goviks.com/brand. For all questions regarding special use of the logos, please contact the Athletics Department.

Primary Athletics Logo

Secondary Viking Mark

SCHOOL/COLLEGE LOGO TREATMENTS

Schools, colleges, and University-wide centers or institutes may use these approved logo treatments in communications where the school or college identity is essential. When deciding whether or not to use these treatments, consider whether or not a cleaner or stronger impression could be achieved using the regular Portland State logo instead.

These logo treatments cannot be used on websites or stationery.

These logos should be used no smaller than 1.825" wide.

Individual departments or offices should use the approved logo treatments on the following page.

PREFFERRED SIZE

College of Liberal Arts and Sciences
PORTLAND STATE UNIVERSITY

2.25" wide

APPROVED VARIATIONS

The School of Business
PORTLAND STATE UNIVERSITY

College of the Arts
PORTLAND STATE UNIVERSITY

School of Social Work
PORTLAND STATE UNIVERSITY

University Honors College
PORTLAND STATE UNIVERSITY

Graduate School of Education
PORTLAND STATE UNIVERSITY

Maseeh College of Engineering and Computer Science
PORTLAND STATE UNIVERSITY

College of Urban and Public Affairs
PORTLAND STATE UNIVERSITY

UNIVERSITY-WIDE CENTERS AND INSTITUTES

Institute for Sustainable Solutions
PORTLAND STATE UNIVERSITY

CO-BRANDED VARIATION

OHSU Portland State UNIVERSITY | SCHOOL OF PUBLIC HEALTH

DEPARTMENT/OFFICE LOGO TREATMENTS

For general usage on many communications, most departments or offices should use the primary Portland State University logo.

The department or office logo treatments on this page are designed for communications, like sponsorships or promotional items, where the department or office identity needs to appear combined directly with the Portland State logo.

These logo treatments cannot be used on websites, stationery, or business cards.

In order to make these logos able to reproduce at smaller sizes, the "Department of" and "Office of" language is omitted to allow the unit name to appear more prominently.

When possible, these logos should be used no smaller than 1.825" wide.

These logo treatments should not be altered, modified, or redrawn in any way. Departments or offices must use either these treatments or the regular Portland State University logo.

Departments and offices may not create additional logos incorporating other elements. Existing icons or graphics (if desired) should be used only as design elements (see example on page 38) and should not be combined with the department or office name in the form of a logo.

These treatments are available for download at pdx.edu/university-communications.

PREFFERRED SIZE



SAMPLE DEPARTMENTAL LOGOS











When should I use the regular PSU logo, and when should I use the department version?

Regular PSU logo:
Brochures
Newspaper and magazine ads
Outdoor advertising
Websites
Stationery
Business cards

Department version:
Online sponsorships
Promotional items (i.e. mugs, pens, signage)

DEPARTMENT/OFFICE LOGO TREATMENTS (cont.)

PRIMARY PORTLAND STATE LOGO:

Portland State
UNIVERSITY

THE PRIMARY PORTLAND STATE LOGO SHOULD BE USED ON:

Brochures
Newspaper and magazine ads
Outdoor advertising
Websites
Stationery
Business cards



Poster example

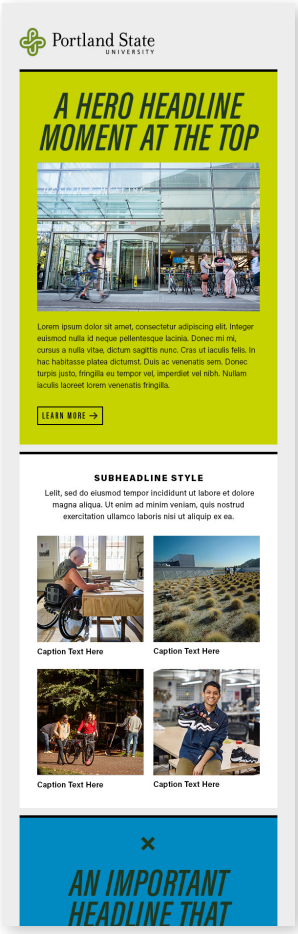

Newsletter example



Business card example

DEPARTMENT/OFFICE LOGO TREATMENTS (cont.)

Portland State
Mechanical and
Materials Engineering

DEPARTMENT/OFFICE VERSIONS CAN ONLY BE USED ON:

Sponsorships



Internal evites/
Event flyers

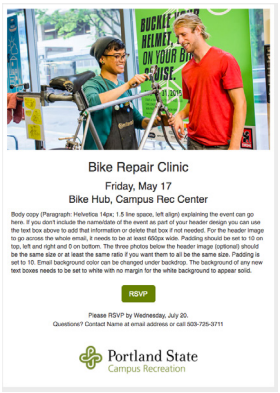

Promotional items



Internal newsletters

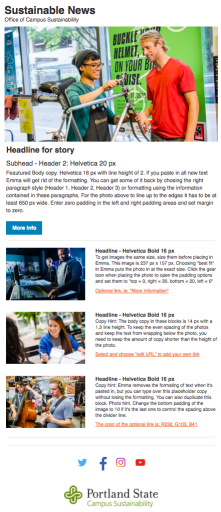

DEPARTMENT/OFFICE VERSIONS CANNOT BE USED ON:

Websites

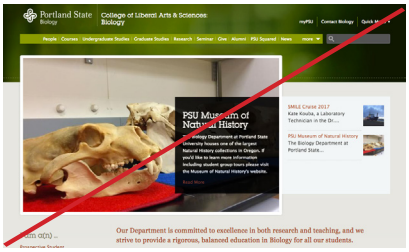

Email signatures



Letterhead/
Business cards



FAQS

What do I do with all of our materials with previous department created logos? Transition as soon as possible to the Portland State logo or the new official department mark (where appropriate), but use up any material you have with the old mark.

Where can I use this mark? Sponsorships, promotional items, and internal communications.

What can't I use it on? Brochures, newspaper and magazine ads, outdoor advertising, websites, stationery, business cards, or email signatures.

Why isn't "Office/Department of" or the word "program" in the logo? These logo treatments are intended for usage on merchandise and sponsorships where being concise is important for readability.

There are a lot of file types; when do I use which file? EPS files are for printing of all varieties, JPEG files are mostly for web usage (white background), and PNG files are for Web use when you need a transparent background.

The EPS logo files are not viewing properly on the Google Site; are these correct? The "viewing" option for EPS files can be problematic on the Google site. When you view the JPG files or download the logos and create a document, they should display correctly.

DEPARTMENT/OFFICE LOGO TREATMENTS (cont.)

USE OF GRAPHIC ELEMENT EXAMPLE

Queer
Resource
Center



Portland State
UNIVERSITY

SUB-BRANDED LOGOS

Portland State University Athletics, the PSU Alumni Association, and the PSU Foundation are the only units approved to carry a unique visual identity. For access to sub-branded logos, contact University Communications at ucomm@pdx.edu.

PSU Alumni Association
PORTLAND STATE UNIVERSITY

PSU Foundation
PORTLAND STATE UNIVERSITY

PORTLAND STATE

STATIONERY SYSTEM

LETTERHEAD, BUSINESS CARD, ENVELOPE

Information on ordering stationery is available at pdx.edu/university-communications.

Letterhead: 8.5" × 11"

Examples not to scale

Portland State
UNIVERSITY

College of Liberal Arts and Sciences
Department of English | Center for Excellence in Writing

Post Office Box 751
Portland, Oregon 97207-0751

503-725-5034 tel
503-725-4499 fax
loremipsum@pdx.edu

Business card: 3.5" x 2"

Portland State
UNIVERSITY

Julie L. Smith
Director of Marketing

503-725-4467 tel
503-725-4465 fax
smithju@pdx.edu
www.pdx.edu

Office of University Communications
Post Office Box 751
Portland, Oregon 97207-0751

730 Market Center Building
1600 SW Fourth Ave.
Portland, Oregon 97201

No. 10 envelope: 9" x 4.125"

Portland State
UNIVERSITY

College of Urban and Public Affairs
Nohad A. Toulan School of Urban Studies and Planning
Post Office Box 751
Portland, Oregon 97207

DESIGN DNA

This page breaks down the anatomy of our visual brand. The graphic language that makes up the PSU Brand is more than any one color, font, or pattern. It's the unique combination of these elements—alongside messaging—that articulates a brand that is driven, assertive, confident, creative, and unapologetic. The following pages will provide greater context to all of the visual elements that make up the PSU Brand and contribute to its personality. Here, see a brief overview of them and how they work together in one composition.

Large headlines bleeding off the composition feel energized and active.

Type formatting is clean and organized and reinforces a hierarchy of content.

Type is tall and confident—stylized for a sense of momentum, and with tight tracking and leading to communicate a sense of urgency.



Small iconography details provide visual interest and represent aspects of what makes us unique.

Sweeping use of bright colors is strong and uncompromising.

Thin linework containers package secondary information and contrast the weight of large, heavy headlines and big floods of color.

Bold color combinations are captivating and creative.

Circular-shaped detail graphics nod to a ripple effect, moving outward.

TYPOGRAPHY

Portland State University uses one font family in its visual communications—Acumin. It is a versatile, unfussy san serif with a variety of weights and styles that lends to a rich typographic approach within the brand. The individual typefaces used within Acumin are Acumin Pro Extra Condensed, Acumin Pro, and Acumin Pro Wide. Acumin Pro Extra Condensed makes up most headlineuse cases, while Acumin Pro provides accessible styles to round out type hierarchy, and Acumin Pro Wide is a stylized weight for special instances.

ACUMIN PRO EXTRA CONDENSED

Aa Bb Cc Xx Yy Zz
1 2 3 4 5 6 7 8 9 0

Acumin Pro Extra Condensed Regular Italic
Acumin Pro Extra Condensed Medium Italic
Acumin Pro Extra Condensed Semibold Italic
Acumin Pro Extra Condensed Bold Italic
Acumin Pro Extra Condensed Black Italic

Acumin Pro Extra Condensed Regular
Acumin Pro Extra Condensed Medium
Acumin Pro Extra Condensed Semibold
Acumin Pro Extra Condensed Bold
Acumin Pro Extra Condensed Black

ACUMIN PRO

Aa Bb Cc Xx Yy Zz
1 2 3 4 5 6 7 8 9 0

Acumin Pro Light
Acumin Pro Regular
Acumin Pro Medium
Acumin Pro Bold
Acumin Pro Black

ACUMIN PRO WIDE

Aa Bb Cc Xx Yy Zz
1 2 3 4 5 6 7 8 9 0

Acumin Pro Wide Regular
Acumin Pro Wide Medium
Acumin Pro Wide Bold
Acumin Pro Wide Black
Acumin Pro Wide Ultra Black

HAMILLTON

Hamilton Signature

Hamillton is a simple, handwritten script font. Refer to page 47 to learn about how and when to incorporate it.

TYPE APPLICATIONS

HEADLINE: STANDARD

IT'S NOT IDEALISTIC IF YOU'RE DOING IT

Acumin Pro Extra Condensed Semibold Italic
in all caps, with tight tracking and leading.

A standard headline rendered in Acumin Pro Extra Condensed, formatted in all caps with medium-to-heavy weights, italicized, and tight tracking and leading. This headline style is strong and declarative. Headlines should employ weights within the range of Medium to Black and be styled in italics to give a sense of prominence and momentum. The extra condensed style coupled with tight tracking and leading lends a feeling of urgency that is a backbone of the PSU Brand.



TYPE APPLICATIONS (cont.)

HEADLINE: STANDARD VARIATIONS

Because the letterforms of Acumin Pro Extra Condensed are simple, sharp, and graphic, headlines don't need to be overly stylized to stand out in visual communications. In fact, the "less is more" treatment reinforces a tone of voice that is strong and confident and lets the power of each message take center stage. Variations in alignment, composition, weight, and scale will provide you with a range of possibilities.



TYPE APPLICATIONS (cont.)

HEADLINE: COMBINATION

CHANGE *ISN'T A MAYBE.*
IT'S A MUST.

Acumin Pro Ultra Black in all caps, with -40pt tracking paired with Acumin Pro Extra Condensed Bold Italic in all caps

A combination headline style brings together multiple fonts within the Acumin family. This headline approach is built using varying weights, scales, and styles to form an arrangement that feels unique and creative. Arrangements are most successful when they contrast the letterform height and weights of Acumin Pro and Acumin Pro Extra Condensed.



TYPE APPLICATIONS (cont.)

HEADLINE: COMBINATION VARIATIONS

Combination headlines can be left- or right-aligned, centered, or staggered, whatever works best with the message, type combinations, and overall design. However, to avoid feeling cluttered or overwhelming, limit your combination of type styles to two or three variations, and use a font or scale strategically to emphasize important words or sections of a headline.



TYPE APPLICATIONS (cont.)

PARAGRAPH STRUCTURE

WHEN IT COMES TO POSITIVE IMPACT, IT'S TIME TO THINK BIGGER AND BOLDER. THIS IS OUR CRUCIAL CALL TO ACTION.

Portland State University is more than this city's public research university. It's the testing ground for ideas and projects that show the world how different is done. Our innovative approach infuses education with creative problem-solving and interdisciplinary collaboration. Choose from 200+ degree programs in Oregon's

Subheadline:
Acumin Pro Black, all caps, 150-300 tracking

Body Copy:
Acumin Pro Regular or Light





Size contrast is important in relation to subheadlines and body copy. When subheadlines are present, there should be a clear hierarchy.

COLOR

Color is a simple, powerful tool in the PSU Brand. Consistent use of the brand colors and colorways across print and digital formats is crucial to maintaining brand equity. The PSU Green and/or Electric Green should be used strategically and be present across all communications.

The personality of our brand is emphasized throughout visual communications by the power of our color palettes. Our shades of green are inspired by the terrain of the Pacific Northwest, while our whole palette together feels vibrant and urban, like the city of Portland. When combined together in unapologetic ways, the results can be energetic, daring, and bold. And it's being able to communicate that tone that helps to differentiate us.

PRIMARY PALETTE

PSU Green
PMS 7496 C
C 40, M 0, Y 100, K 38
R 109, G 141, B 36
#6d8d24

Electric Green
PMS 389 C
C 27, M 3, Y 100, K 0
R 198, G 211, B 0
#cfd82d

Forest Green
PMS 553 C
C 71, M 40, Y 80, K 68
R 33, G 57, B 33
#213921

White
C 0, M 0, Y 0, K 0
R 255, G 255, B 255
#ffffff

Black
C 0, M 0, Y 0, K 100
R 0, G 0, B 0
#000000

SECONDARY PALETTE

Red
PMS 7417 C
C 4, M 87, Y 98, K 0
R 230, G 73, B 39
#e64927

Sand
PMS 7500 C
C 0, M 8, Y 35, K 10
R 232, G 211, B 162
#e8d3a2

Blue
PMS 7460 C
C 100, M 7, Y 0, K 20
R 0, G 138, B 193
#008ac1

Light Blue
PMS 290 C
C 32, M 0, Y 0, K 0
R 165, G 223, B 249
#a5dff9

Stone
PMS 4226 C
C 40, M 30, Y 60, K 18
R 138, G 138, B 103
#8a8a67

Yellow
PMS 7548 C
C 0, M 25, Y 100, K 0
R 255, G 194, B 14
#ffc20e

Orange
PMS 715 C
C 0, M 55, Y 100, K 0
R 246, G 139, B 31
#f68b1f

Purple
PMS 2613 C
C 48, M 100, Y 0, K 40
R 101, G 3, B 96
#650360

COLOR APPLICATION

When applying the PSU color palettes to visual communications, there's three important things to keep in mind: 1) Building brand awareness and brand equity; 2) Ensuring accessibility and readability, and 3) Managing the style and personality of different color combinations.

BRAND AWARENESS

Anchoring the PSU Green in all work is critical to building brand awareness. Even in a piece that relies heavily on a flood of the Electric Green, the presence of the PSU Green in the logo mark reinforces a core color component of our brand. When activating the secondary colors to inject more color, vibrancy, and personality, be sure to include them within a larger context of PSU brand materials that utilize the PSU Green.



COLOR APPLICATION (cont.)

ACCESSIBILITY

Below are color combinations that are the most successful based on accessibility standards and readability. Each colorway exploration posits the three main green PSU shades as the background color, with variations in headline colors. The following visual should be read hierarchically, with PSU Green the most promiment, followed by Electric Green, and then Forest Green. And, for each of those background colors, the best colorway combination is the headline example all the way to the left (each labeled Primary, Secondary, and Tertiary Combo). The remaining colorway combinations can be used, but pay close attention to footnotes for exceptions regarding scale and digital formats.



Primary Combo:
Forest Green on PSU Green

Electric Green on PSU Green [1, 2]

White on PSU Green



Secondary Combo:
Forest Green on Electric Green

PSU Green on Electric Green [1, 2]

Red on Electric Green

Blue on Electric Green [1]



Tertiary Combo:
Electric Green on Forest Green

White on Forest Green

Red on Forest Green

Blue on Forest Green

Sand on Forest Green

1 Not ideal for digital formats due to accessibility and ADA compliance regulations.
2 For general use; is most readable in large headlines.
****Smaller text and body copy should be limited to black, white, or forest green.*

COLOR APPLICATION (cont.)

COLOR COMBINATIONS

The last consideration around color combinations is managing an overall approach to style and personality. Mixing and contrasting different PSU colors together in typography or artwork does a good job at demonstrating a strong tone of voice. Color combinations should achieve the right balance between being bold, striking, and unapologetic with a degree of harmony. Some color combinations have too much tension, and result in a vibrating effect that isn't pleasant and doesn't provide enough contrast to be readable. It's also critical to not go overboard with too many colors in one piece. Each panel below is limited to a two-color combo with alongside neutrals like black and/or white. Samples below indicate color relationships from the primary and secondary palettes that are most successful together in addition to others to avoid.





COLOR APPLICATION (cont.)

COLOR COMBINATIONS

The Forest Green, Red, Blue, and Sand colors work best with PSU Green and Electric Green. But remember to apply these colors carefully, as described on the previous page, and within the larger context of other PSU core branding elements.

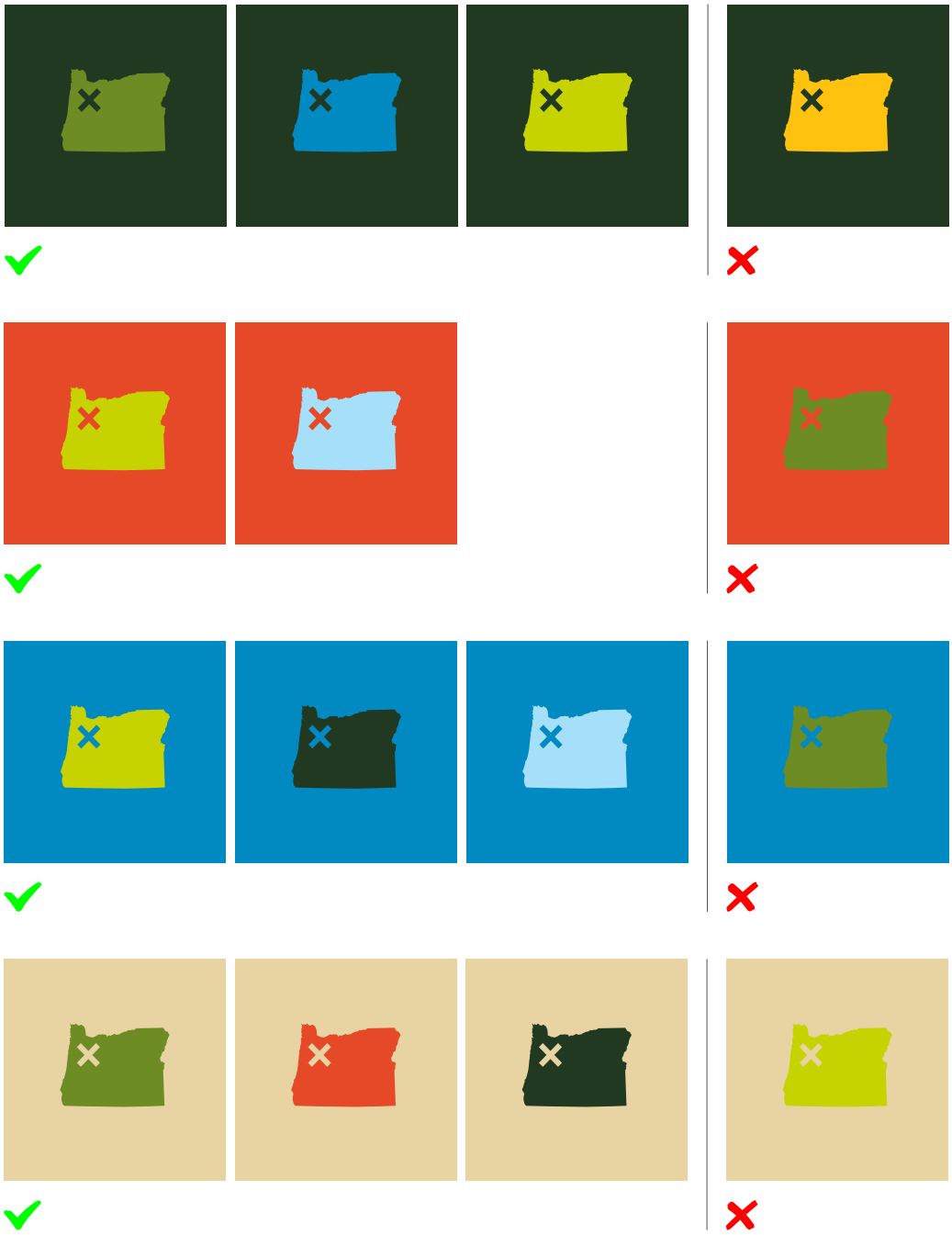

GRAPHIC ELEMENTS

ICONOGRAPHY

Small graphic details can be utilized in design to communicate unique aspects of PSU and our brand. A simple "X" shape is a multiplier, representing the power of every person to effect positive impact exponentially. Or, placed within the Oregon silhouette, it marks our home in Portland and ownership of this urban hotspot for progressive thinking. And linework arrows are small nods to forward movement and momentum. Each of these icons can accentuate a line of messaging, highlight a call to action, or emphasize a bold color combination.



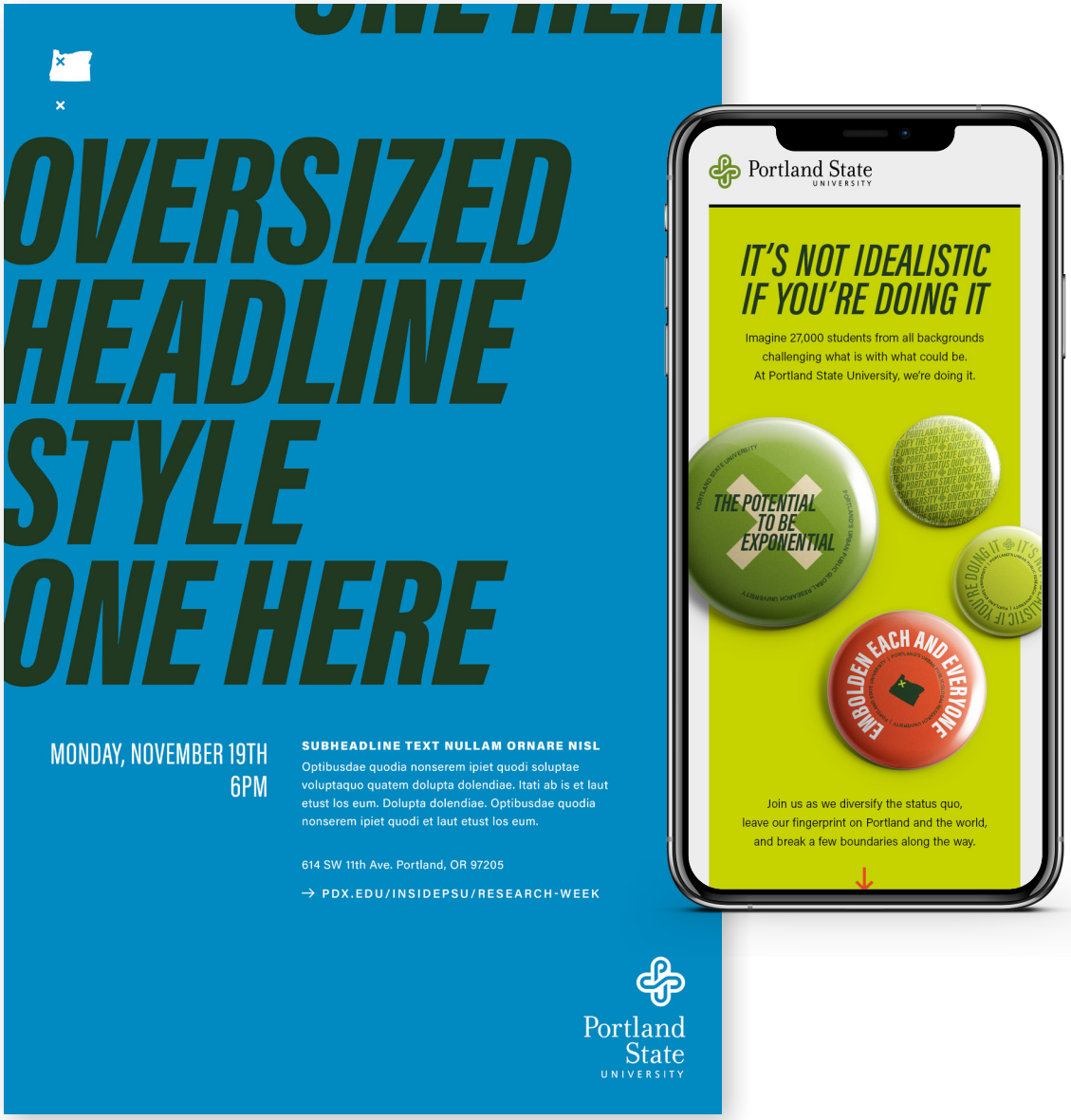

GRAPHIC ELEMENTS (cont.)

COLOR STRIP

Incorporating a narrow strip of color into your design works as an anchor to a logo, call to action, text, or photo. It can also complement photography by nicely activating the PSU primary and secondary color palette. Avoid making this visual element feel obtrusive or heavy. Most color strips will be at full opacity, but experiment with the results of your photo interacting with certain colors in Overlay or Screen mode in your Effects panel. This transparency overlay technique should be used carefully and sparingly.





GRAPHIC ELEMENTS (cont.)

LINEWORK

Information can be neatly organized and "packaged" within rectangular linework containers. In some compositions, this helps provide some weight to smaller subheadlines and body copy in comparison to bold, prominent headlines. The linework container is a simple device for framing information, dividing content, or moving the user's eye along a piece of communication. Consider contrasting one edge of your container with a stroke in a slightly heavier weight for visual interest. Avoid getting overly complicated with this technique—it's important to remember that less is more.



GRAPHIC ELEMENTS (cont.)

TEXTURAL TREATMENTS

Small graphic patterns and shapes work to add subtle texture and interest to a design piece. These graphics all build off a basic circle shape, but each has their own dynamic sense of movement or pulse. While they can frame the edges of a composition or have an interesting overlay with photography, consider these additions mainly superficial and thus unneccessary to any design that is feeling crowded or fussy.

Graphic A



Graphic B



Graphic C







Modify the size, color, opacity, and/or overlay effect for what suits your design best. All graphics work nicely over photography, but only Graphics A and B should be layered on top of flat color.

GRAPHIC ELEMENTS (cont.)

SCROLLING TYPE/PHOTO

A vertical repetition of type or photography is an interesting and dynamic way to communicate a feeling of movement and momentum. A large headline repeating off the edge of the top or bottom of your composition becomes abstracted in a graphic way. Be sure to consider appropriate spacing and negative space when repeating type, and to cut off enough of the text so that it's only for visual interest, and not entirely readable. Meanwhile, for photography, images repeating in a similar manner can frame content and provide additional color and texture.



PHOTO TREATMENT

GRADIENT OVERLAY

Images get a subtle and warm wash with custom gradient blend overlays. From our color palette of greens and yellows, these overlays can elevate and stylize photography, enhance emotive aspects of the subject matter, and give images a dewy, warm glow. This technique should be used lightly and sparingly, and for special circumstances so that visuals continue to feel authentic and natural.







Adding Gradient Overlays to Photos

1. Open the photo you want to apply the gradient to in Photoshop.
2. Place your gradient file on top of your selected photo and in the Layers panel, set the blending mode to Screen.
3. Adjust the opacity and position of the gradient so that it is a very subtle effect, somewhere between 10-30%. This can enhance a photo's highlights and brighten the shadows slightly.
4. The overall effect should enrich a photo without overwhelming it.

Note: Premade gradient assets, from the PSU Brand Toolkit, can be used to accomplish this look.

PHOTOGRAPHY

The PSU Brand uses photography to tell a story about an experience on campus and throughout our city that is engaged, active, and vibrant. Imagery should be interesting and illustrate Portland State's personality—creative, driven, and personal. Photography of people learning and living—collaborating together—feels genuine and spirited, and should show a strong presence within the city of Portland. Use of natural light should be considered as often as possible and candid moments and emotions are the most captivating. Outdoor settings should reflect a balance between the urban, progressive nature of our city and the lush green qualities of the Pacific Northwest.



APPENDIX

APPENDIX

Pieces on the following pages are spec work that illustrates PSU's strategic positioning of "Where Forward is in Focus" and the creative concept "Embolden Each & Everyone." Each page represents a body of work that articulates one complete idea to a specific target audience. And, all together, they're designed to show flexibility and scale of the PSU Brand across varying audiences and mediums.



THE FOLLOWING WORK ADDRESSES THE FOLLOWING AUDIENCES

- Current and Prospective Students
- Parents and Guidance Counselors
- Local Portland Community
- Prospective Graduate Students
- Alumni
- Prospective Donors and Community

APPENDIX

UNDERGRADUATE OOH CAMPAIGN

An overarching ad campaign that drives undergraduate consideration and draws attention to exciting programs from across the university. The advertising demonstrates that we “walk the walk" by supporting social justice and inclusivity, and by challenging the status quo, positioning PSU as a progressive institution—all to prove PSU's dedication to expanding opportunity and serving the city. The work evokes a feeling of shared momentum in Portland by inviting our audience to join with others making a difference here. As a design system, it can be used to support multiple points of pride or distinction.



The ad campaign utilizes students' real and unique signatures to add a human, personal quality to the communications. In instances when you cannot obtain student signatures, the Hamillton script font from page 27 can be used.



APPENDIX

UNDERGRADUATE RECRUITMENT

The undergraduate search piece combines “maker” culture and progressive values into one versatile piece, and that includes a branded button pin for prospective students to display and share in PSU's progressive spirit. This piece broadcasts PSU’s unapologetic commitment to access and impact, giving students an understanding of who and what this institution stands for. And the pins can be repurposed to create interesting mobile installations at varying scales based on Admissions Department needs.



APPENDIX

GRADUATE DIGITAL AD CAMPAIGN

This campaign uses the reasons that students pursue a graduate degree to create momentum and excitement. Leveraging PSU's amazing faculty, we invite students to become part of their research, and join them in improving their own lives and the lives of others. The campaign consists of rich media digital ads and a Spotify ad spot that both drive to a graduate school microsite experience.



APPENDIX

MBA PROGRAM AWARENESS

After working a full day at their jobs, part-time graduate students may be heading to the grocery store, the gym, or the bar. Site-specific marketing meets them where they are and generates interest in the part-time MBA program. At the grocery store, eco-friendly branded totes promote sustainability. At the bar, coasters message the importance of industry connections. And at the gym, branded water cups message pushing yourself further and achieving more.













APPENDIX

ALUMNI ENGAGEMENT

To engage alumni and increase PSU pride, an event series taps into current events and cultural moments, providing PSU with a relevant platform for creating and maintaining connections. These events will give professors and students reason to reconnect and enjoy being together, creating a sense of group belonging and identity. The event series is created around a cultural moment, with email invites to alumni and print pieces that provide value to alumni around the event topic, followed by subsequent social sharing that deepens connections among alumni.



APPENDIX

PSU FOUNDATION ACTIVATION

Leaders and influencers are always looking for a way to make connections and come together over a common cause. PSU's event series will give them the forum to do that. Faculty, alumni, influencers, leaders, and potential donors gather together to discuss issues that relate to Portland's future and our areas of impact. By inviting influential people to be part of a movement in Portland, we build coalitions that turn potential donors into allies and advocates. The events in the series could be held at alumni-owned local businesses and feature entertainment, food, and drink from local artists and vendors.







THANK YOU

Portland State
UNIVERSITY

Energy Saving Guidelines for Portland State University

Heating and Ventilation

- Conditioned spaces will be heated to a temperature range of 67-70 in the winter and cooled, where applicable, to a temperature range of 72-76. Plan for the season and dress appropriately.
- Personal or University owned space heaters will not be allowed, unless approval from Facilities and Property Management (FPM) has been granted for cases where spaces cannot otherwise be heated to the appropriate range. Once approval has been granted, space heaters must comply with fire code, be turned off when a space is not being occupied and be selected with energy efficiency and safety as top priorities. FPM will then work to identify a long-range solution to heating the space to an appropriate level.
- Building ventilation will be based on actual use of the space, as determined by Academic Schedules, Posted Building Occupancy, and Special Events.
- Windows in conditioned spaces are to remain closed when building conditioning systems are operating.
- All supply and return air vents in offices, classrooms, and laboratories must be unobstructed at all times.
- Utility Manager and Facilities staff will work with events scheduling team to consolidate activities into energy efficient buildings on campus.

Purchasing

- When available, all electronic purchases must be Energy Star certified including laboratory, clinical, research, or other educational equipment.
- Computer purchases, per Office of Information Technology (OIT) recommended configurations, should meet Energy Star and EPEAT GOLD certification.

Technology & Other Electronics

- All computers must comply with University Power Management Settings that reduce electrical consumption of monitors and CPU's unless a valid reason exists for the CPU to always be on.
- Whenever possible, users should utilize networked printers and scanners. Exceptions may be made for extenuating circumstances, including, but not limited to, high volume of confidential documents, lack of accessibility to appropriate networked equipment.
- Refrigerators, microwaves and coffee makers are not authorized for use in individual spaces on campus

Lighting

- All spaces will be lit to an appropriate lighting level for the tasks being performed. Unless exceptional circumstances exist, including but not limited to safety or security concerns, lighting in unoccupied spaces will remain off.
- Building occupants are encouraged to take advantage of natural light, whenever possible.
- New construction and renovation will incorporate daylight sensing technology, allowing overhead fixtures to dim when outside lighting is sufficient.
- Instead of lighting an entire room, focus light where you need it with task lighting.
- Utilize energy efficient LED bulbs in task lighting.

Unoccupied Spaces

- Through a combination of campus awareness and automated systems, campus facilities should be set to minimum energy consumption standards when unoccupied both during the day and after hours.
- Where possible, students, faculty, and staff, including custodial contractors, should turn lights off when vacating a space.
- When leaving at the end of the day, operable window covering should be lowered to prevent thermal losses during heating season and gains during cooling season.
- When leaving a lab, close fume hood sashes when not in use.
- Turn off computers, monitors, printers and all other equipment at the end of each day.

Portland State University

Office of Information Technology, Academic Technology Services, and Instructional Technology Services

Instructional Technology Guidelines

Summer 2018



Table of Contents

Integrated Audiovisual Systems and Equipment Master

A. General
B. Products
C. Execution
D. Diagrams and Legend

Flat Panel Display

A. General
B. Products
C. Execution
D. Diagram

Interactive Display

A. General
B. Products
C. Execution
D. Diagram

Projector

A. General
B. Products
C. Execution
D. Diagram

Dual Projector

A. General
B. Products
C. Execution
D. Diagram

Lecture Capture

A. General
B. Products
C. Execution
D. Diagram

OIT

A. General

B. Products
C. Execution
D. Diagram

Standard

A. General
B. Products
C. Execution
D. Diagram

INTEGRATED AUDIOVISUAL SYSTEMS AND EQUIPMENT

PART 1 - GENERAL

1.1 RELATED DOCUMENTS

A. Drawings and general provisions of the Contract, including General and Supplementary Conditions and Division 01 Specification Sections, apply to this Section.

B. ANSI/Infocomm 1M-2009, Audio Coverage Uniformity in Enclosed Listener Areas

C. ANSI/Infocomm 10: 2013, AV Systems Performance Verification 89

D. ANSI/Infocomm 3M-2011, Projected Image Contrast Ratio

E. Infocomm F501-01:2015, Cable Labeling for Audiovisual Systems

F. NFPA 70, National Electrical Code, as adopted and amended by the local jurisdiction

G. IBC, International Building Code as adopted and amended by the local jurisdiction

1.2 SUMMARY

A. Section Includes:

1. Integrated audio and visual equipment and systems, including control equipment and systems, cabling, mounting, furniture and appurtenances.

1.3 EQUIPMENT PROVISION

A. Audiovisual system equipment shall be assumed to be furnished by Owner and installed by Contractor unless noted otherwise in project documents.

B. Audiovisual system cabling and appurtenances shall be assumed to be furnished and installed by Contractor unless noted otherwise in project documents.

C. Workmanship and equipment shall adhere to the latest referenced codes and standards of the following organizations:

1. American National Standards Institute
2. National Electrical Manufacturer’s Association
3. National Fire Protection Association
4. Underwriter’s Laboratories

1.4 QUALIFICATIONS

A. The Contractor responsible for the work of this section shall be a factory-authorized dealer, where applicable, for the major components specified. Explicit exceptions may be granted by the Engineer or by PSU OIT personnel; provide written request with the bid for services.

B. The Contractor responsible for the work of this section shall have at least one systems technician certified by Infocomm International as a Certified Technology Specialist – Installation OR a lead installer with at least 5 years verifiable field installation experience.

C. The Contractor responsible for the work of this section shall be licensed, bonded and insured to perform this work in the project location.

D. The Contractor responsible for the work of this section shall be factory certified for the programming of installed equipment, including control systems, DSPs, encoders, decoders, etc. The Owner will be responsible for system programming unless otherwise noted in the project documents.

1.5 ACTION SUBMITTALS

A. Contractor Qualifications:

1. For projects following a design-build format, where the Contractor is submitting a bid directly to the Owner, and not bidding based on an Architect/Engineer designed bid package, provide the following qualifications with bid package:

a. Personnel: Submit project team resumes project manager, foreman, and lead on-site technician. List Infocomm or other applicable certifications for each.
b. Project Experience: Submit a description of a minimum of three (3) project references of similar size and scope.

2. For projects following a design-bid-build format, where the Contractor is submitting a bid based on an Architect/Engineer designed bid package, provide the following qualifications with product data submittals if awarded the bid:

a. Project Experience: Submit a description of a minimum of three (3) project references of similar size and scope.

B. Product datasheets of specific equipment that will be installed in the system. Where product datasheets show multiple items, options, or accessories, indicate on the datasheet the particular item/options/accessories that will be provided, and if the products are Owner-Furnished Owner

Installed (OFOI), Owner-Furnished Contractor Installed (OFCI), or Contractor-Furnished Contractor Installed (CFCI). The intent of the requirement for Contractor to submit product data for items furnished by Owner are to allow for review that Contractor clearly understands the delineation of scope for procurement.

C. Shop Drawings:

1. Provide audiovisual system block diagrams showing all equipment and detailed connections between components. Include designators/proposed labeling for equipment and cabling runs to correspond with those in floorplans.
2. Provide floorplans with equipment, cabling, and pathways. Indicate cabling quantities and types and pathway quantities and sizes.
3. Provide layouts/elevations of audiovisual equipment racks
4. Where indicated in a request-for-proposal (RFP), invitation-to-bid (ITB), or elsewhere in the project documents, that the Contractor's scope will include system programming, provide drawings of all touchscreen/user interface pages and popups, indicating functionality of all buttons and logical links between pages/popups.
    a. Provide overview/flowchart for the proposed layout and architecture of the control interface.
    b. Provide annotated screenshots of all proposed pages, indicating functions for each button.
    c. Indicate which pages are accessible to general users and which are accessible only to technicians/authorized users. Provide a description of system behavior during standby, startup, and shutdown.
5. Refer to System Performance Criteria in Part 3 of this specification for additional requirements.

1.6 CLOSEOUT SUBMITTALS

A. Operation and Maintenance Data - Provide operation and maintenance manual. Manual shall include job name, completion date, and names and contact information of Owner, Architect, Engineer, and Contractor. Operation and Maintenance manual shall include

1. System operation instructions for the installed system
2. Product datasheet submittal material
3. Manufacturer's operation manuals for installed equipment

4. System block diagrams
5. Schedule of manufacturer, model and serial numbers for audiovisual system equipment
6. List of consumable parts and contact information for ordering spares
7. System verification test reports
8. Video recording of Owner training session(s) – for specialty systems only.
9. Custom code created for the project, in uncompiled and editable format if programming is provided under the Contractor's scope, and not by Owner.
10. Warranty information, including warranty contract and contact information for engaging warranty service from the Contractor responsible for the work of this section, and manufacturer warranty information for installed equipment.

B. Provide PDF set of As-Built drawings showing final locations of equipment, cabling, and cable pathways. Include 1 set with the operation and maintenance data submittal for handover to Owner. 1 set shall become project record drawings for the work of this section.

1.7 SYSTEM DESCRIPTION

A. Responsibilities of this section include

1. Provision of complete and working systems as described in the project documents and drawings.
2. Complete integration with systems, architectural features and equipment provided by others.
3. Complete integration with Owner's existing AV systems and facility management software.
4. Generation of submittals and documentation as described in the project documents and drawings.
5. Provision and on-site installation of subject systems, including equipment, cabling, furniture, interfaces, infrastructure and appurtenances as required to deliver a complete system.
6. Coordination with Owner for staging, cleaning, refurbishment and delivery of Owner furnished equipment.
7. Coordination with general Contractor, Owner, audiovisual systems consultant and other disciplines.

8. Initial adjustment of the systems and provision of test equipment for system checkout and acceptance tests.
9. Training in the operation and maintenance of the systems for personnel designated by the Owner.
10. System programming where indicated in the RFP, ITB, or project documents; otherwise, programming is provided by Owner.

1.8 COORDINATION WITH OTHER TRADES

A. Electrical, Lighting, Telecommunication

1. Where audiovisual displays (projection screens, flat panel displays, etc) are present, coordinate with lighting designer to provide additional switch zone for lights near display to minimize ambient light at display surface
2. Coordinate with division 26 to provide dedicated 20A circuits at flat panel display, projector, and podium locations.
3. Coordinate with division 27 to provide necessary data and POE drops at audiovisual equipment locations. Refer to audiovisual system block diagrams for quantity, and provide at a minimum:
   a. Podium location: 6 jacks
   b. Flat panel display locations: 2 jacks

B. Multiple Disciplines

1. Where audiovisual displays (projection screens, flat panel displays, etc) are present, coordinate with other trades to ensure sightlines and projection path(s) are free from obstruction, including architectural features, pendant light fixtures, fire sprinklers, wireless access points, etc.
2. Where projection screens and microphones are present, coordinate locations with HVAC diffusers to minimize acoustic interference and physical movement.

PART 2 - PRODUCTS

2.1 MANUFACTURERS AND EQUIPMENT

A. Provide equipment as listed in the audiovisual equipment schedules.

B. Materials and equipment installed under the work of this section must be produced by manufacturers with a minimum of 5 years' experience, and whose product literature demonstrates compliance with this section and the referenced codes and standards.

C. Manufacturers and model numbers indicated in this specification, the audiovisual equipment schedules, diagrams or elsewhere in the project documents represent PSU standard equipment. Substitutions will not be accepted without written documentation from PSU OIT personnel.

D. Materials and equipment provided shall be new and meet or exceed performance requirements of those listed in the audiovisual equipment schedules.

E. In the event that specified material or equipment has reached end of life at the time of procurement, Contractor shall seek direction from PSU OIT, Engineer, or Architect.

F. Equipment must be UL listed.

G. Unless otherwise noted, equipment accessories shall be manufactured by the manufacturer of the equipment that they accessorize.

H. Equipment substitutions must be requested in accordance with Division 01 and will be evaluated against Owner standards, performance, reliability, functionality, and in some cases, aesthetics. Substitution requests shall include justification for the proposed substitution.

I. Where Owner furnished and/or existing equipment is being used in the installation, Contractor is responsible for cleaning, accessorizing, replacing consumable parts with new, and testing said equipment prior to installation.

2.2 MOUNTING EQUIPMENT

A. Install mounting hardware as required for a finished installation of all equipment, including speakers, projectors, flat panel displays, rack-mounted equipment, control panels, and others. Where mounting hardware is not scheduled, it is nonetheless assumed to be included in the bid documents. Install accessories for equipment racks as required for a complete installation, including power distribution and covers.

B. Provide physical security measures for all audiovisual equipment in classrooms, including security mounts, screws, locking clamps, podiums, and drawers, retractable cables for wireless remote controls and audible alarms.

2.3 PROJECTION SCREENS

A. Projection screens shall:

1. Have 16:10 aspect ratio
2. Have controlled screen return for image width <120”
3. Be electrically raised/lowered for image width ≥120”

B. Sizing

1. Minimum projection screen image width shall be 96”
2. Projection screen images shall be sized such that the image height is greater than or equal to the distance to the least favored viewer divided by 5, except where limited by room architecture. If room architecture limits projection screen size, coordinate with PSU OIT-ITS, architect or engineer for direction.
3. Bottom of projected image shall be no lower than 42” above finished floor

2.4 WIRING AND CABLE

A. Provide wiring and cable from the following manufacturers, as appropriate for the installation

ID	CABLE TYPE	MANUFACTURER	MODEL
70V	70V Speaker Wire	LIBERTY	20-2C-TTPSH
8Ω	8Ω	LIBERTY	1x-2C
COMP	Composite Video	LIBERTY	RG59-CCTV
DP	Display Port	LIBERTY	E-DPM
HDBT	HD BaseT	COVIDE	P-C6F-BLU
HDMI	High Definition Multimedia Inter-	LIBERTY	HDPMM
LA	Line Level Audio	LIBERTY	20-2C-SH
MIC	Microphone Level Audio	LIBERTY / GEPCO	MP1201
NET	Network Cable	LIBERTY	24-4P-L6
POE	Power Over Ethernet Network	LIBERTY	24-4P-L6
RGBHV	Red/Green/Blue/Horiz/Vert	LIBERTY	RGB5C-25-CMP
RS	RS232	LIBERTY	24-2P-485
SA	Stereo Line Level Audio	LIBERTY	22-2P-INDSH
USB	Universal Serial Bus	LIBERTY	E-USB3x

PART 3 - EXECUTION

3.1 COORDINATION

A. Interface and coordinate the work of this section with that of other trades and examine drawings and specifications of other trades including mechanical, electrical, telecommunications, architectural, and structural for construction details and coordination.

B. Confirm exact installation location of all devices with Owner / Architect / interior designer prior to rough-in, including, but not limited to equipment installed in front of house spaces, equipment installed in custom assemblies, and equipment installed or routed through millwork / casework.

C. Coordinate layout and installation of system components and suspension system with other construction that penetrates ceilings or is supported by them, including, but not limited to, light fixtures, HVAC equipment, fire-suppression system, and partition assemblies. This includes coordination to confirm moving objects have a clear path of travel and confirmation that projected image paths are clear from obstruction.

D. Coordinate with architectural and structural to reinforce walls where audiovisual equipment is scheduled for mounting. Design for actual equipment weight with a 2x safety factor, minimum 100 lbs. Coordinate these reinforcements with division 26 and 27 and PSU OIT-ITS and facilities to ensure power and data services are accounted for.

3.2 NETWORKING

A. Where Owner provided active and passive networking equipment is used as a part of the audiovisual installation, coordinate with Owner's representatives to ensure said networking equipment meets or exceeds specifications and is configured as required by the manufacturers of the audiovisual equipment that will reside on the network.

B. Coordinate with data/telecom Contractor to combine pathways for networking and low-voltage category cabling where allowable.

3.3 CUSTOM SOFTWARE / USER INTERFACE

A. Where indicated in the RFP, ITB, or elsewhere in the project documents, that the Contractor's scope will include system programming, adhere to the following requirements:

1. Provide a unified User Interface (UI) throughout the project with consistent design language throughout.

2. The UI should be consistent for all systems, even where different touch panel models are used.

3. Provide color printouts of all UI pages and popups for review. Coordinate with owner for audiovisual control system user interfaces, including owner's branding as required, and obtaining final approval from owner for control system UI screens. Approval shall be by signed affidavit.

3.4 INSTALLATION OF RACEWAYS

A. Coordinate raceways with Electrical Contractor (EC) prior to rough-in. This includes providing detailed conduit, box, and raceways requirements to EC with sufficient time for procurement of materials, coordination with other trades, etc. with no delay in the overall construction schedule.

B. Power, signal and control wiring for audiovisual systems shall each be routed in dedicated conduits, unless otherwise noted.

C. Where conduit pathways are installed with spare capacity, provide pullstring to aid in future cable installation.

D. Where spare conduit pathways are provided, provide pullstring or mule tape to aid in future cable installation.

E. Label each end of conduit to indicate location of other end.

F. Classrooms

1. Provide wallbox at front corner of room near teaching station, maximum 3'-0" from corner. Provide pathways to wallbox:
   a. (1) 1" conduit for audio and video cables to flat panel display / projector location
   b. (1) ¾" conduit stub to ceiling space for speaker level audio cabling. Where ceilings are open to structure, or in other cases where speaker cable runs are visible, provide ¾" conduit pathways for entirety of cable run.
   c. (1) ¾" conduit from branch panel for line voltage
   d. (1) 1" conduit from IDF for network cabling

2. Provide wall boxes for flat panel displays. Provide pathways to wall box:
   a. (1) 2" conduit to teaching station wallbox

b. (1) ¾" conduit for line voltage
c. (1) 1" conduit for network cabling

3. Provide ceiling boxes for projectors. Provide pathways to ceiling box:

a. (1) 2" conduit to teaching station wallbox
b. (1) ¾" conduit for line voltage
c. (1) 1" conduit for network cabling

3.5 WIRING METHODS

A. Wiring Method: Unless otherwise noted, in "front of house" spaces, wire and cable pathways shall be concealed in accessible ceilings, walls, and floor. Reference drawing details, if provided in the project documents, and coordinate with Architect to ensure desired aesthetic is maintained. Wire and cable to be supported independently of other systems or work by other trades, in a means acceptable to NEC requirements.

B. Wiring within Enclosures: Bundle, lace, and train cables to terminal points with only the necessary excess and without exceeding manufacturer's limitations on bending radii. Provide proper cable slack and management within slide-out and rotating racks to allow for maintenance access while system is still operational, without damaging cables. Where possible, use hook-and-loop type cable ties, not zip-ties.

C. Use hard plastic spiral wrap for cable bundles from wall or floor outlets to podium/lecterns, conference room table pop-up boxes, etc. or anywhere cabling is exposed to potential damage by end-users. Cloth mesh type cable wrap is not accessible.

3.6 INSTALLATION OF CABLES

A. General Cable Installation Requirements:

1. Terminate conductors; no cable shall contain un-terminated elements. Make terminations only at outlets and terminals.

2. Secure and support cables at intervals not exceeding 30 inches and not more than 6 inches from cabinets, boxes, fittings, outlets, racks, and terminals. Wire and cable to be supported independently of other systems or work by other trades, in a means acceptable to NEC requirements.

3. Do not install bruised, kinked, scored, deformed, or abraded cable. Do not splice cable between termination, tap, or junction points. Remove and discard cable if damaged during installation and replace it with new cable.

4. Maintain maximum separation from line voltage conductors. Where line voltage conductors must cross signal cabling, cross at right angles.

B. Cable Labeling: Affix permanent machine printed labels to all cables in the audiovisual system, including power cables. Barcode labels are acceptable, but must also be accompanied by a text label readable without machine assistance. Text height shall be minimum 2.5mm, and label shall be within 1-12 inches of termination, the end of unterminated cable, or the exit of cable jacketing or strain-relief. Cable labeling shall correspond with cable schedule and shop drawings. Label cabling in accordance with Infocomm F501.01:2015

3.7 WIRELESS SYSTEMS

A. Confirm frequency range of specified wireless systems and equipment is appropriate for local regulations and is free from interference. Coordinate licensing for wireless systems as required.

B. Where multiple wireless systems are present, coordinate frequency ranges to prevent interference between systems.

C. Provide remote antenna(s), mounting, cabling and appurtenances as required for wireless transmitters/receivers as needed to ensure wireless system performance is free from dropouts, bad reception, static, and interference.

3.8 INSTALLATION

A. Equipment shall be mounted firmly in place with permanent hardware adequate to support the equipment with a 3x weight multiplier safety factor. Fixed equipment shall be braced for seismic activity as required by the local jurisdiction.

B. Wall-Mounted Outlets: Flush mounted unless otherwise noted in project documents. Where installing flush-mounted outlets is not possible, seek approval for surface-mounted devices from Architect, Engineer, or PSU OIT personnel.

C. Finishes: Coordinate finishes with Architect for exposed equipment, including speakers, wallplates, etc.

D. Provide accessories, backboxes, pathways, mounting hardware, decorative trim, escutcheons cabling, and ancillary equipment to provide a complete and functioning system as outlined in these specifications and project drawings.

3.9 SYSTEM PERFORMANCE CRITERIA

A. Perform tests and measurements in accordance with AV9000:2011 Quality Management System for the Audio Visual Technology Industry and ANSI/Infocomm 10:2013, AV Systems Performance Verification to ensure adequate system performance.

B. Measure and document system performance against the following minimum criteria. Where system performance criteria are not met, take corrective action as required to bring system performance into compliance with criteria listed here and in the referenced performance documents. Where criteria listed below and those in the referenced performance documents are in disagreement, the more stringent are in effect. Where criteria listed below and those in the reference performance documents cannot be met by no fault of the Contractor, Contractor to indicate this along with shop drawing submittals.

1. Audio

   a. Head room level: 10 dB
   b. Audio electrical SNR: ≥60 dB
   c. Audio system output level variance: ≤±1 dB
   d. Program audio signal sources should be balanced at the input stage to generate a level variance not to exceed ±1 dB
   e. The system under test shall produce a flat frequency response (+/-0.5dB) from 20 Hz to 20 kHz.
   f. Speech Transmission Index: ≥0.66
   g. Audio power amplifier channels shall not be loaded beyond their rated capacity
   h. Voice reinforcement shall be stable. No audible feedback is acceptable.
   i. Balance/adjust audio and videoconferencing microphone gains and lobes such that standard voices (60dB, 1m) at each seated conferencing position produce a signal level variance of ≤±3 dB.
   j. Audio only system latency: ≤2 ms.
   k. Total Harmonic Distortion: <1%
   l. Acoustic echo cancellation: no perceptible echo (>55dB cancellation)

2. Video

   a. Display resolution: minimum 1080p compatible
   b. Camera resolution: 1080p compatible
   c. Digital displays shall be free from artifacts and faithfully display program content.
   d. Confirm optimal brightness, contrast and color in displays using SMPTE source

e. Where multiple displays are visible in the same area, demonstrate color consistency throughout, where applicable.
f. Verify that displayed images are free from visible distortion
g. 0 pixel failures per display
h. Confirm even illumination across displays. No location shall be measured to be greater than +10% or -5% the average illumination.
i. Test all digital video signal chains to ensure HDCP is carried through, enabling display of protected content at all locations, U.O.N.
j. Audio/video system latency (lip sync) shall not exceed +20 ms/-40ms

3. Control, Power, Compatibility, Other

a. Ensure system components are powered up and down in sequence. Audio power amplifiers shall power up last and power down first. Control processors should never power down.
b. Ensure manufacturer's recommended cable bend radii are not exceeded.
c. Demonstrate audio and video teleconferencing compatibility with all anticipated far-end soft codecs, including, at a minimum, Google Hangouts, Skype, and Zoom.
d. Ensure control system performs listed functions as indicated and described in the contract documents while remaining synced with audiovisual system components and external system hardware and software

3.10 STARTUP SERVICE

A. Schedule: Inform PSU OIT personnel a minimum of two weeks prior to anticipated completion of system installation, so that Owner has sufficient time to schedule programming effort. This schedule shall also include a minimum three-week period for system adjustments, troubleshooting, etc. before the project's scheduled completion.

B. Perform startup service:

1. Verify that electrical wiring installation complies with manufacturer's submittal and installation requirements.

2. Complete installation and startup checks according to manufacturer's written instructions.

3. Conduct system verification tests to ensure system performs as intended. Reference "Infocomm Audiovisual Systems Performance Verification Checklist," available at http://www.infocomm.org/cps/rde/xbcr/infocomm/CAVSP_Checklist.pdf. Indicate

PASS/FAIL/NOT APPLICABLE for listed criteria and include as System Verification Test Report in Operation and Maintenance submittal. Reference section 1.

3.11 ACCEPTANCE TESTING

A. At completion of startup service and acceptance of system verification test report, schedule site visit with Engineer.

1. Make available to the Engineer the following during acceptance testing
   a. Final 'as-built' drawings, shop drawings, floor plans, block diagrams, and equipment manufacturer's operation/setup manuals
   b. Source and measurement media/equipment to demonstrate all functions of audiovisual systems
   c. Contractor to make adjustments as determined necessary by the Engineer, including physically re-mounting/re-aligning equipment, adjusting gain, equalization, control system GUI, etc.

2. Acceptance testing can be combined with punchlist site visit.

3. Failed acceptance tests requiring rework which cannot be completed during the scheduled acceptance test visit will be grounds for non-acceptance and will require additional acceptance testing at a future date to demonstrate compliance with the project documents.

4. Additional site visits due to acceptance test failures will be the financial responsibility of the Contractor, including hourly billable rate for Engineer, actual travel costs and related expenses.

3.12 WARRANTY

A. Include all provisions of the standard manufacturer-backed warranty for each piece of equipment. Provisions shall remain in effect for a period as stated by the manufacturer. Contractor shall be an authorized service representative for all equipment supplied as part of this project unless appropriate written approval from owner has been granted prior to equipment procurement or installation. The warranty shall also cover the accuracy of technical documentation, and signal quality as specified and documented during the testing process of this project.

B. Contractor to guarantee all work installed under this specification. Make good, repair or replace, at the Contractor's own expense, any defective work, materials or parts which may show themselves within three years after final acceptance, if in the opinion of the Architect or Engineer said defect is due to imperfection in material, design, or workmanship.

C. Provide, as an itemized option, the ability to extend the terms of the warranty described above for one additional year.

3.13 ADJUSTING

A. On-Site Assistance: Engage a factory-authorized service representative to provide on-site assistance in adjusting sound levels, resetting transformer taps, and adjusting controls to meet occupancy conditions.

B. Occupancy Adjustments: When requested within 6 months of date of Substantial Completion, provide on-site assistance in adjusting system to suit actual occupied conditions. Provide up to two visits to Project during other-than-normal occupancy hours for this purpose.

3.14 DEMONSTRATION

A. Train Owner's maintenance personnel to adjust, operate, and maintain the Integrated Audio-Video Systems and Equipment. Provide video recording of this training and include in Operations and Maintenance manual on USB flash drive format.

END OF SECTION

TECHNOLOGY LEGEND

AUDIOVISUAL DIAGRAMS LEGEND

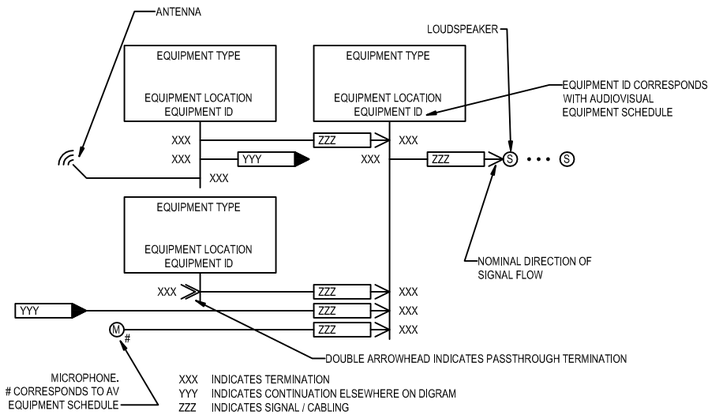

SIGNALS / CABLE		
ID	**SIGNAL**	**CABLE**
70V	HIGH-Z SPEAKER LEVEL AUDIO	2 CONDUCTOR
8Ω	LOW-Z SPEAKER LEVEL AUDIO	2 CONDUCTOR
AVB	AUDIO VIDEO BRIDGING	CAT6 4-PR UTP
CATV	MULTIPLEXED RF AUDIO/VIDEO	QUAD SHIELD RG-6
COBR	COBRANET	CAT6 4-PR UTP
CRES	CRESNET	(1) 22 AWG STP, (1) 18-AWG PR
DAN	DANTE AUDIO	CAT6 4-PR UTP
DMX	DMX512	BELDEN 9842; SHIELDED, 2-PR + DRAIN
DP	DISPLAY PORT	DISPLAYPORT
HDBT	HDBASET / CRESTRON DM / EXTRON DTP/XTP	CAT6 4-PR UTP
HDMI	HIGH DEFINITION MULTIMEDIA INTERFACE	HIGH DEFINITION MULTIMEDIA INTERFACE
IR	INFRARED	2 CONDUCTOR
LA	LINE LEVEL AUDIO, BALANCED, UON	3 CONDUCTOR
MIC	BALANCED MIC LEVEL AUDIO	3 CONDUCTOR SHIELDED
NET	ETHERNET	CAT6 4-PR UTP
OM1	DATA	62.5 mm OM1 MULTIMODE FIBER
POE	ETHERNET, POE	CAT6 4-PR UTP
RS2	RECOMMENDED STANDARD 232	5 CONDUCTOR
RS4	RECOMMENDED STANDARD 485	5 CONDUCTOR
SA	STEREO LINE LEVEL AUDIO, BALANCED, UON	5 CONDUCTOR
SOCA	(6) 20A LIGHTING CIRCUITS	19 CONDUCTOR 12/14 AWG
SPDIF	SONY PHILIPS DIGITAL INTERFACE FORMAT	SERIAL DIGITAL COAX RG-6

TERMINATIONS	
ID	**TERMINATION**
3.5M	3.5 MM BARREL, TS/TRS/TRRS
BAN	BANANA CONNECTOR
BNC	BAYONET NEILL CONCELMAN
CS	CAPTIVE SCREW
DB9	D-SUB MINIATURE - 9 PIN
DP	DISPLAYPORT/MINI
EURO	EURO BLOCK CONNECTOR
FCON	F-CONNECTOR
HDMI	HDMI TYPE A/C/D
IEC	INTERNATIONAL ELECTROTECHNICAL COMMISSION 60320
LC	LUCENT CONNECTOR
PHX	PHOENIX CONNECTORS
RCA	RCA TERMINALS
RJ	REGISTERED JACK 45
RJ11	REGISTERED JACK 11
SC	DUAL STANDARD CONNECTOR
SCR	SCREW TERMINALS
SPKN	NEUTRIK 2-POLE SPEAKON
USB	USB, TYPE A/B/MINI/MICRO
VGA	VIDEO GRAPHICS ARRAY
WR	BARE WIRES
XLR	3-PIN XLR
S19	19-PIN SOCAPEX

EQUIPMENT MATRIX

		OWNER		CONTRACTOR	
EQUIPMENT	**PREFFERED MANUFACTURER / VENDOR**	**FURNISHED**	**INSTALLED**	**FURNISHED**	**INSTALLED**
DIGITAL PROJECTORS	PANASONIC, EPSON	X			X
PROJECTOR MOUNT AND POST	BMS, CHIEF, PEERLESS	X			X
ADDITIONAL PROJECTOR MOUNTING HARDWARE	BMS, CHIEF, PEERLESS	X			X
PROJECTION SCREENS	DA-LITE	X			X
PROJECTION MARKERBOARDS	DA-LITE	X			X
FLAT PANEL DISPLAYS	PANASONIC, LG, PLANAR	X			X
FLAT PANEL DISPLAY MOUNTING HARDWARE	BMS, CHIEF, PEERLESS			X	X
AUDIOVISUAL CONTROL EQUIPMENT	EXTRON	X			X
AUDIOVISUAL ROUTING EQUIPMENT	EXTRON	X			X
AUDIOVISUAL PROCESSING EQUIPMENT	EXTRON	X			X
AUDIOVISUAL AMPLIFICATION EQUIPMENT	EXTRON	X			X
DOCUMENT CAMERAS	AVERMEDIA, ELMO, LUMENS	X			X
FIXED COMPUTING EQUIPMENT	DELL	X			X
LOUDSPEAKERS	TOA, JBL	X			X
MICROPHONES	SENNHEISER	X			X
LINE VOLTAGE POWER MANAGEMENT EQUIPMENT	TRIP-LITE	X			X
FLOOR AND CEILING BOXES	FSR			X	X
AUDIOVISUAL EQUIPMENT RACKS	MIDDLE ATLANTIC	X			X
VIDEO PRODUCTION EQUIPMENT	PANASONIC, VADDIO	X			X
LECTURE CAPTURE EQUIPMENT	WINNOV, EXTRON	X			X
INSTRUCTIONAL PODIUMS	KLASSTECH	X			X

DATE: 2018-06-22

REF:

SCALE: N.T.S.

DWG. NO: AV000

DWG. TITLE: LEGEND AND ABBREVIATIONS

REVISION: 003

PROJECT: PORTLAND STATE UNIV. AV STANDARDS UPDATES

Portland State UNIVERSITY

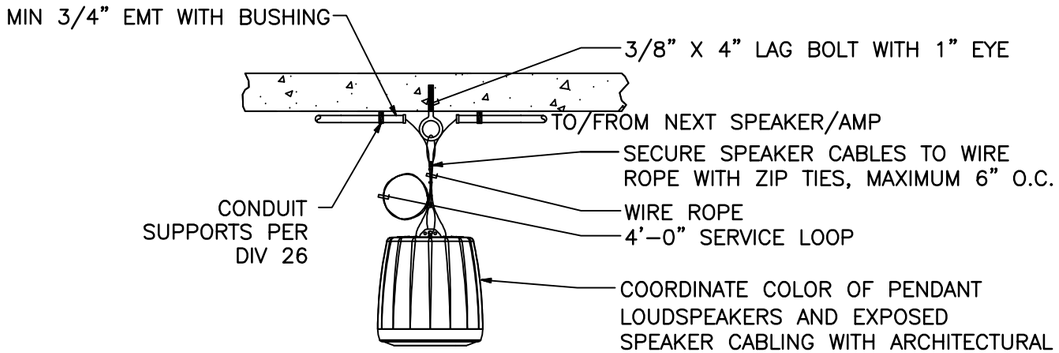

2 CEILING SPEAKER INSTALLATION
SCALE: NTS

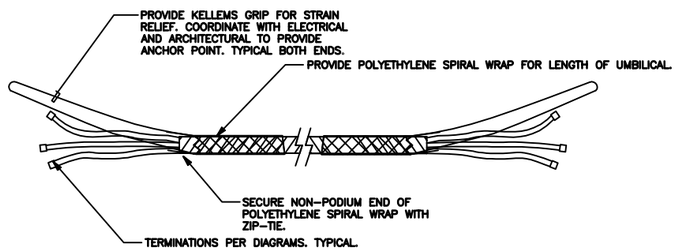

1 AUDIOVISUAL PODIUM UMBILICAL CONSTRUCTION
SCALE: NTS

DATE: 2018-06-22
REF:
SCALE: N.T.S.
DWG. NO: AV900

DWG. TITLE: AUDIOVISUAL DETAILS
REVISION: 003
PROJECT: PORTLAND STATE UNIV. AV STANDARDS UPDATES

Portland State UNIVERSITY

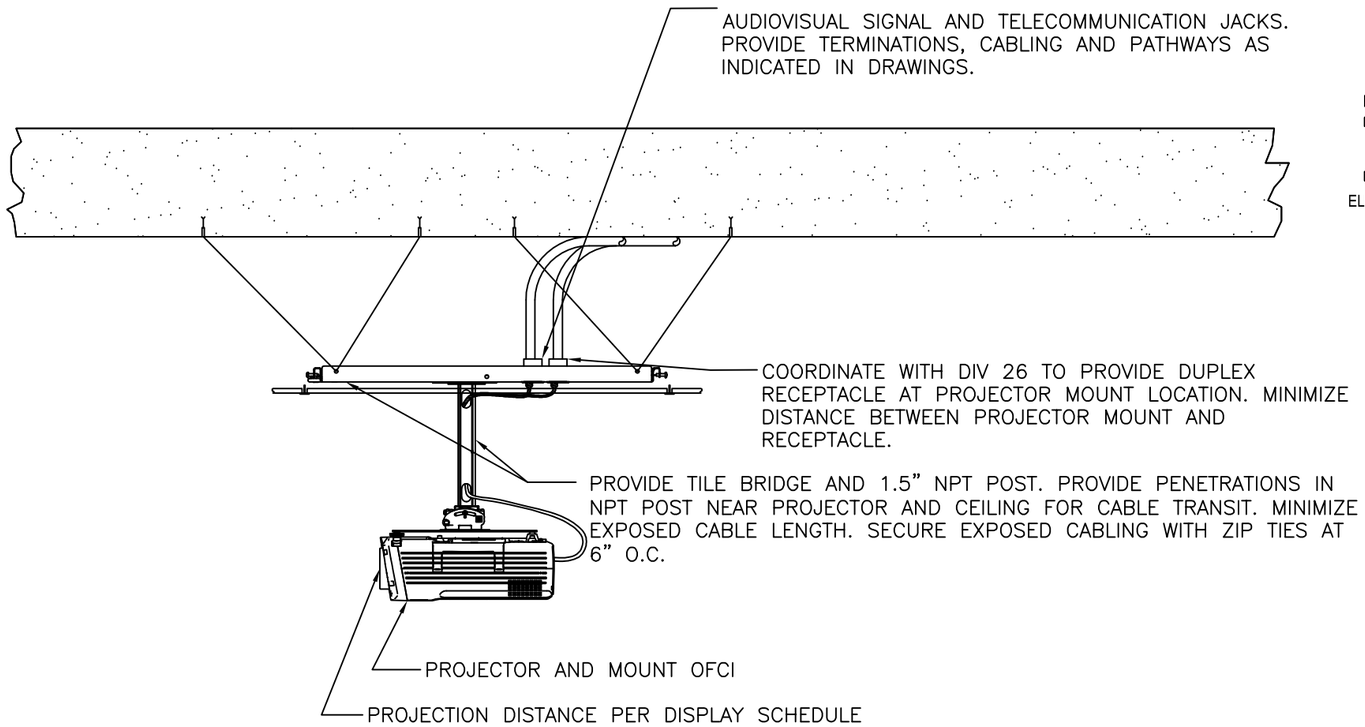

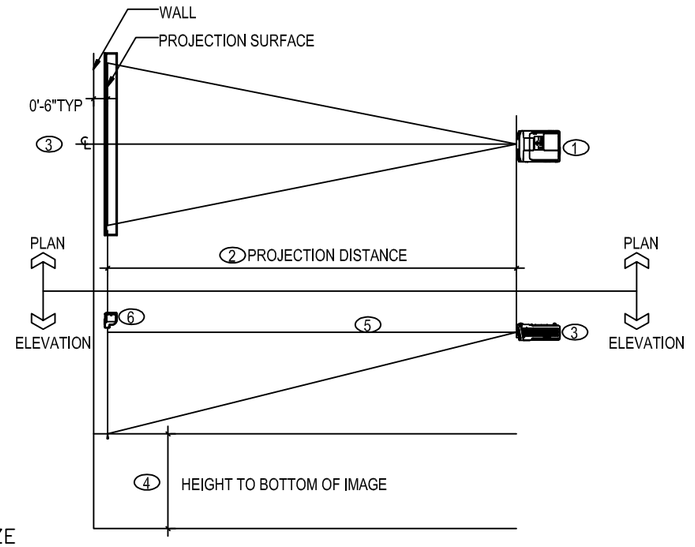

NOTES (#)

1. PROJECTOR SHALL BE MOUNTED PERPENDICULAR TO PLANE OF PROJECTION SURFACE ON IMAGE CENTERLINE.
2. PROJECTION DISTANCE SHALL BE DEFINED AS THE DISTANCE FROM THE PROJECTOR LENS TO THE PROJECTION SURFACE AND SHALL BE AS SPECIFIED IN THE DISPLAY SCHEDULE. PROJECTOR MOUNTING LOCATION SHALL BE CONFIRMED WITH ARCHITECT PRIOR TO ROUGH-IN.
3. UON, PROJECTION LENS CENTERLINE SHALL BE ON HORIZONTAL CENTERLINE OF PROJECTED IMAGE SURFACE. PROJECTOR SHALL BE MOUNTED AT TOP OF PROJECTED IMAGE, OR AS HIGH AS OPTICAL LENS SHIFT WILL ALLOW, EXCEPT AS NOTED. DIGITAL IMAGE CORRECTION SHALL NOT BE USED TO MOUNT PROJECTOR OUTSIDE OF RANGE ATTAINABLE BY OPTICAL LENS CORRECTION WITHOUT PRIOR ENGINEERING APPROVAL.
4. BOTTOM OF PROJECTED IMAGE SHALL BE AT 42" AFF, UON. PROVIDE EXTRA BLACK DROP AT TOP OF SCREEN AS NECESSARY.
5. CONTRACTOR TO ENSURE PROJECTION PATH IS FREE OF OBSTRUCTION FROM LIGHT FIXTURES, ETC.
6. ENSURE PATH OF TRAVEL OF PROJECTION SCREEN IS FREE OF OBSTRUCTION FROM MARKERBOARD TRAYS, CASEWORK, ETC.

1 PROJECTOR MOUNTING
SCALE: NTS

DWG. TITLE: AUDIOVISUAL DETAILS
REVISION: 003
PROJECT: PORTLAND STATE UNIV. AV STANDARDS UPDATES
DATE: 2018-06-22
REF:
SCALE: N.T.S.
DWG. NO: **AV901**

Portland State UNIVERSITY

INTEGRATED AUDIOVISUAL SYSTEMS AND EQUIPMENT FOR CONFERENCE ROOMS

(FLAT PANEL DISPLAY)

PART 1 - GENERAL

1.1 RELATED DOCUMENTS

A. Drawings and general provisions of the Contract, including General and Supplementary Conditions and Division 01 Specification Sections, apply to this Section.

B. ANSI/Infocomm 1M-2009, Audio Coverage Uniformity in Enclosed Listener Areas

C. ANSI/Infocomm 10: 2013, AV Systems Performance Verification 89

D. ANSI/Infocomm 3M-2011, Projected Image Contrast Ratio

E. Infocomm F501-01:2015, Cable Labeling for Audiovisual Systems

F. NFPA 70, National Electrical Code, as adopted and amended by the local jurisdiction

G. IBC, International Building Code as adopted and amended by the local jurisdiction

1.2 SUMMARY

A. Section Includes:

1. Integrated audio and visual equipment and systems, including control equipment and systems, cabling, mounting, furniture and appurtenances.

1.3 EQUIPMENT PROVISION

A. Audiovisual system equipment shall be assumed to be furnished by Owner and installed by Contractor unless noted otherwise in project documents.

B. Audiovisual system cabling and appurtenances shall be assumed to be furnished and installed by Contractor unless noted otherwise in project documents.

C. Workmanship and equipment shall adhere to the latest referenced codes and standards of the following organizations:

1. American National Standards Institute
2. National Electrical Manufacturer’s Association
3. National Fire Protection Association
4. Underwriter’s Laboratories

1.4 QUALIFICATIONS

A. The Contractor responsible for the work of this section shall be a factory-authorized dealer, where applicable, for the major components specified. Explicit exceptions may be granted by the Engineer or by PSU OIT personnel; provide written request with the bid for services.

B. The Contractor responsible for the work of this section shall have at least one systems technician certified by Infocomm International as a Certified Technology Specialist – Installation OR a lead installer with at least 5 years verifiable field installation experience.

C. The Contractor responsible for the work of this section shall be licensed, bonded and insured to perform this work in the project location.

D. The Contractor responsible for the work of this section shall be factory certified for the programming of installed equipment, including control systems, DSPs, encoders, decoders, etc. The Owner will be responsible for system programming unless otherwise noted in the project documents.

1.5 ACTION SUBMITTALS

A. Contractor Qualifications:

1. For projects following a design-build format, where the Contractor is submitting a bid directly to the Owner, and not bidding based on an Architect/Engineer designed bid package, provide the following qualifications with bid package:

   a. Personnel: Submit project team resumes project manager, foreman, and lead on-site technician. List Infocomm or other applicable certifications for each.
   b. Project Experience: Submit a description of a minimum of three (3) project references of similar size and scope.

2. For projects following a design-bid-build format, where the Contractor is submitting a bid based on an Architect/Engineer designed bid package, provide the following qualifications with product data submittals if awarded the bid:

   a. Project Experience: Submit a description of a minimum of three (3) project references of similar size and scope.

B. Product datasheets of specific equipment that will be installed in the system. Where product datasheets show multiple items, options, or accessories, indicate on the datasheet the particular item/options/accessories that will be provided, and if the products are Owner-Furnished Owner Installed (OFOI), Owner-Furnished Contractor Installed (OFCI), or Contractor-Furnished Contractor Installed (CFCI). The intent of the requirement for Contractor to submit product data for

items furnished by Owner are to allow for review that Contractor clearly understands the delineation of scope for procurement.

C. Shop Drawings:

1. Provide audiovisual system block diagrams showing all equipment and detailed connections between components. Include designators/proposed labeling for equipment and cabling runs to correspond with those in floorplans.
2. Provide floorplans with equipment, cabling, and pathways. Indicate cabling quantities and types and pathway quantities and sizes.
3. Provide layouts/elevations of audiovisual equipment racks
4. Where indicated in a request-for-proposal (RFP), invitation-to-bid (ITB), or elsewhere in the project documents, that the Contractor's scope will include system programming, provide drawings of all touchscreen/user interface pages and popups, indicating functionality of all buttons and logical links between pages/popups.
    a. Provide overview/flowchart for the proposed layout and architecture of the control interface.
    b. Provide annotated screenshots of all proposed pages, indicating functions for each button.
    c. Indicate which pages are accessible to general users and which are accessible only to technicians/authorized users. Provide a description of system behavior during standby, startup, and shutdown.
5. Refer to System Performance Criteria in Part 3 of this specification for additional requirements.

1.6 CLOSEOUT SUBMITTALS

A. Operation and Maintenance Data - Provide operation and maintenance manual. Manual shall include job name, completion date, and names and contact information of Owner, Architect, Engineer, and Contractor. Operation and Maintenance manual shall include

1. System operation instructions for the installed system
2. Product datasheet submittal material
3. Manufacturer's operation manuals for installed equipment
4. System block diagrams
5. Schedule of manufacturer, model and serial numbers for audiovisual system equipment
6. List of consumable parts and contact information for ordering spares

7. System verification test reports
8. Video recording of Owner training session(s) – for specialty systems only.
9. Custom code created for the project, in uncompiled and editable format if programming is provided under the Contractor's scope, and not by Owner.
10. Warranty information, including warranty contract and contact information for engaging warranty service from the Contractor responsible for the work of this section, and manufacturer warranty information for installed equipment.

B. Provide PDF set of As-Built drawings showing final locations of equipment, cabling, and cable pathways. Include 1 set with the operation and maintenance data submittal for handover to Owner. 1 set shall become project record drawings for the work of this section.

1.7 SYSTEM DESCRIPTION

A. Responsibilities of this section include

1. Provision of complete and working systems as described in the project documents and drawings.
2. Complete integration with systems, architectural features and equipment provided by others.
3. Complete integration with Owner's existing AV systems and facility management software.
4. Generation of submittals and documentation as described in the project documents and drawings.
5. Provision and on-site installation of subject systems, including equipment, cabling, furniture, interfaces, infrastructure and appurtenances as required to deliver a complete system.
6. Coordination with Owner for staging, cleaning, refurbishment and delivery of Owner furnished equipment.
7. Coordination with general Contractor, Owner, audiovisual systems consultant and other disciplines.
8. Initial adjustment of the systems and provision of test equipment for system checkout and acceptance tests.
9. Training in the operation and maintenance of the systems for personnel designated by the Owner.

10. System programming where indicated in the RFP, ITB, or project documents; otherwise, programming is provided by Owner.

B. Functional Description

1. Use: Conference rooms with flat panel displays will be used for local audiovisual presentations.

2. Equipment

a. Fixed PC
b. Wired auxiliary input
c. Wireless gateway
d. Audio and video processing, routing and amplification equipment
e. Control System Processor
f. Flat panel display with integrated loudspeakers

1.8 COORDINATION WITH OTHER TRADES

A. Electrical, Lighting, Telecommunication

1. Where audiovisual displays (projection screens, flat panel displays, etc) are present, coordinate with lighting designer to provide additional switch zone for lights near display to minimize ambient light at display surface

2. Coordinate with division 26 to provide dedicated 20A circuits at flat panel display, projector, and podium locations.

3. Coordinate with division 27 to provide necessary data and POE drops at audiovisual equipment locations. Refer to audiovisual system block diagrams for quantity, and provide at a minimum:

a. Podium location: 6 jacks
b. Flat panel display locations: 2 jacks

B. Multiple Disciplines

1. Where audiovisual displays (projection screens, flat panel displays, etc) are present, coordinate with other trades to ensure sightlines and projection path(s) are free from obstruction, including architectural features, pendant light fixtures, fire sprinklers, wireless access points, etc.

2. Where projection screens and microphones are present, coordinate locations with HVAC diffusers to minimize acoustic interference and physical movement.

PART 2 - PRODUCTS

2.1 MANUFACTURERS AND EQUIPMENT

A. Provide equipment as listed in the audiovisual equipment schedules.

B. Materials and equipment installed under the work of this section must be produced by manufacturers with a minimum of 5 years' experience, and whose product literature demonstrates compliance with this section and the referenced codes and standards.

C. Manufacturers and model numbers indicated in this specification, the audiovisual equipment schedules, diagrams or elsewhere in the project documents represent PSU standard equipment. Substitutions will not be accepted without written documentation from PSU OIT personnel.

D. Materials and equipment provided shall be new and meet or exceed performance requirements of those listed in the audiovisual equipment schedules.

E. In the event that specified material or equipment has reached end of life at the time of procurement, Contractor shall seek direction from PSU OIT, Engineer, or Architect.

F. Equipment must be UL listed.

G. Unless otherwise noted, equipment accessories shall be manufactured by the manufacturer of the equipment that they accessorize.

H. Equipment substitutions must be requested in accordance with Division 01 and will be evaluated against Owner standards, performance, reliability, functionality, and in some cases, aesthetics. Substitution requests shall include justification for the proposed substitution.

I. Where Owner furnished and/or existing equipment is being used in the installation, Contractor is responsible for cleaning, accessorizing, replacing consumable parts with new, and testing said equipment prior to installation.

2.2 MOUNTING EQUIPMENT

A. Install mounting hardware as required for a finished installation of all equipment, including speakers, projectors, flat panel displays, rack-mounted equipment, control panels, and others. Where mounting hardware is not scheduled, it is nonetheless assumed to be included in the bid documents. Install accessories for equipment racks as required for a complete installation, including power distribution and covers.

B. Provide physical security measures for all audiovisual equipment in classrooms, including security mounts, screws, locking clamps, podiums, and drawers, retractable cables for wireless remote controls and audible alarms.

2.3 PROJECTION SCREENS

A. Projection screens shall:

1. Have 16:10 aspect ratio
2. Have controlled screen return for image width <120”
3. Be electrically raised/lowered for image width ≥120”

B. Sizing

1. Minimum projection screen image width shall be 96”
2. Projection screen images shall be sized such that the image height is greater than or equal to the distance to the least favored viewer divided by 5, except where limited by room architecture. If room architecture limits projection screen size, coordinate with PSU OIT-ITS, architect or engineer for direction.
3. Bottom of projected image shall be no lower than 42” above finished floor

2.4 WIRING AND CABLE

A. Provide wiring and cable from the following manufacturers, as appropriate for the installation

ID	CABLE TYPE	MANUFACTURER	MODEL
70V	70V Speaker Wire	LIBERTY	20-2C-TTPSH
8Ω	8Ω	LIBERTY	1x-2C
COMP	Composite Video	LIBERTY	RG59-CCTV
DP	Display Port	LIBERTY	E-DPM
HDBT	HD BaseT	COVIDE	P-C6F-BLU
HDMI	High Definition Multimedia Inter-	LIBERTY	HDPMM
LA	Line Level Audio	LIBERTY	20-2C-SH
MIC	Microphone Level Audio	LIBERTY / GEPCO	MP1201
NET	Network Cable	LIBERTY	24-4P-L6
POE	Power Over Ethernet Network	LIBERTY	24-4P-L6
RGBHV	Red/Green/Blue/Horiz/Vert	LIBERTY	RGB5C-25-CMP
RS	RS232	LIBERTY	24-2P-485
SA	Stereo Line Level Audio	LIBERTY	22-2P-INDSH
USB	Universal Serial Bus	LIBERTY	E-USB3x

PART 3 - EXECUTION

3.1 COORDINATION

A. Interface and coordinate the work of this section with that of other trades and examine drawings and specifications of other trades including mechanical, electrical, telecommunications, architectural, and structural for construction details and coordination.

B. Confirm exact installation location of all devices with Owner / Architect / interior designer prior to rough-in, including, but not limited to equipment installed in front of house spaces, equipment installed in custom assemblies, and equipment installed or routed through millwork / casework.

C. Coordinate layout and installation of system components and suspension system with other construction that penetrates ceilings or is supported by them, including, but not limited to, light fixtures, HVAC equipment, fire-suppression system, and partition assemblies. This includes coordination to confirm moving objects have a clear path of travel and confirmation that projected image paths are clear from obstruction.

D. Coordinate with architectural and structural to reinforce walls where audiovisual equipment is scheduled for mounting. Design for actual equipment weight with a 2x safety factor, minimum 100 lbs. Coordinate these reinforcements with division 26 and 27 and PSU OIT-ITS and facilities to ensure power and data services are accounted for.

3.2 NETWORKING

A. Where Owner provided active and passive networking equipment is used as a part of the audiovisual installation, coordinate with Owner's representatives to ensure said networking equipment meets or exceeds specifications and is configured as required by the manufacturers of the audiovisual equipment that will reside on the network.

B. Coordinate with data/telecom Contractor to combine pathways for networking and low-voltage category cabling where allowable.

3.3 CUSTOM SOFTWARE / USER INTERFACE

A. Where indicated in the RFP, ITB, or elsewhere in the project documents, that the Contractor's scope will include system programming, adhere to the following requirements:

1. Provide a unified User Interface (UI) throughout the project with consistent design language throughout.

2. The UI should be consistent for all systems, even where different touch panel models are used.

3. Provide color printouts of all UI pages and popups for review. Coordinate with owner for audiovisual control system user interfaces, including owner's branding as required, and obtaining final approval from owner for control system UI screens. Approval shall be by signed affidavit.

3.4 INSTALLATION OF RACEWAYS

A. Coordinate raceways with Electrical Contractor (EC) prior to rough-in. This includes providing detailed conduit, box, and raceways requirements to EC with sufficient time for procurement of materials, coordination with other trades, etc. with no delay in the overall construction schedule.

B. Power, signal and control wiring for audiovisual systems shall each be routed in dedicated conduits, unless otherwise noted.

C. Where conduit pathways are installed with spare capacity, provide pullstring to aid in future cable installation.

D. Where spare conduit pathways are provided, provide pullstring or mule tape to aid in future cable installation.

E. Label each end of conduit to indicate location of other end.

F. Classrooms

1. Provide wallbox at front corner of room near teaching station, maximum 3'-0" from corner. Provide pathways to wallbox:
   a. (1) 1" conduit for audio and video cables to flat panel display / projector location
   b. (1) ¾" conduit stub to ceiling space for speaker level audio cabling. Where ceilings are open to structure, or in other cases where speaker cable runs are visible, provide ¾" conduit pathways for entirety of cable run.
   c. (1) ¾" conduit from branch panel for line voltage
   d. (1) 1" conduit from IDF for network cabling

2. Provide wall boxes for flat panel displays. Provide pathways to wall box:
   a. (1) 2" conduit to teaching station wallbox
   b. (1) ¾" conduit for line voltage
   c. (1) 1" conduit for network cabling

3. Provide ceiling boxes for projectors. Provide pathways to ceiling box:
   a. (1) 2” conduit to teaching station wallbox
   b. (1) ¾” conduit for line voltage
   c. (1) 1” conduit for network cabling

3.5 WIRING METHODS

A. Wiring Method: Unless otherwise noted, in “front of house” spaces, wire and cable pathways shall be concealed in accessible ceilings, walls, and floor. Reference drawing details, if provided in the project documents, and coordinate with Architect to ensure desired aesthetic is maintained. Wire and cable to be supported independently of other systems or work by other trades, in a means acceptable to NEC requirements.

B. Wiring within Enclosures: Bundle, lace, and train cables to terminal points with only the necessary excess and without exceeding manufacturer's limitations on bending radii. Provide proper cable slack and management within slide-out and rotating racks to allow for maintenance access while system is still operational, without damaging cables. Where possible, use hook-and-loop type cable ties, not zip-ties.

C. Use hard plastic spiral wrap for cable bundles from wall or floor outlets to podium/lecterns, conference room table pop-up boxes, etc. or anywhere cabling is exposed to potential damage by end-users. Cloth mesh type cable wrap is not accessible.

3.6 INSTALLATION OF CABLES

A. General Cable Installation Requirements:

1. Terminate conductors; no cable shall contain un-terminated elements. Make terminations only at outlets and terminals.
2. Secure and support cables at intervals not exceeding 30 inches and not more than 6 inches from cabinets, boxes, fittings, outlets, racks, and terminals. Wire and cable to be supported independently of other systems or work by other trades, in a means acceptable to NEC requirements.
3. Do not install bruised, kinked, scored, deformed, or abraded cable. Do not splice cable between termination, tap, or junction points. Remove and discard cable if damaged during installation and replace it with new cable.
4. Maintain maximum separation from line voltage conductors. Where line voltage conductors must cross signal cabling, cross at right angles.

B. Cable Labeling: Affix permanent machine printed labels to all cables in the audiovisual system, including power cables. Barcode labels are acceptable, but must also be accompanied by a text label readable without machine assistance. Text height shall be minimum 2.5mm, and label shall be within 1-12 inches of termination, the end of unterminated cable, or the exit of cable jacketing or strain-relief. Cable labeling shall correspond with cable schedule and shop drawings. Label cabling in accordance with Infocomm F501.01:2015

3.7 WIRELESS SYSTEMS

A. Confirm frequency range of specified wireless systems and equipment is appropriate for local regulations and is free from interference. Coordinate licensing for wireless systems as required.

B. Where multiple wireless systems are present, coordinate frequency ranges to prevent interference between systems.

C. Provide remote antenna(s), mounting, cabling and appurtenances as required for wireless transmitters/receivers as needed to ensure wireless system performance is free from dropouts, bad reception, static, and interference.

3.8 INSTALLATION

A. Equipment shall be mounted firmly in place with permanent hardware adequate to support the equipment with a 3x weight multiplier safety factor. Fixed equipment shall be braced for seismic activity as required by the local jurisdiction.

B. Wall-Mounted Outlets: Flush mounted unless otherwise noted in project documents. Where installing flush-mounted outlets is not possible, seek approval for surface-mounted devices from Architect, Engineer, or PSU OIT personnel.

C. Finishes: Coordinate finishes with Architect for exposed equipment, including speakers, wallplates, etc.

D. Provide accessories, backboxes, pathways, mounting hardware, decorative trim, escutcheons cabling, and ancillary equipment to provide a complete and functioning system as outlined in these specifications and project drawings.

3.9 SYSTEM PERFORMANCE CRITERIA

A. Perform tests and measurements in accordance with AV9000:2011 Quality Management System for the Audio Visual Technology Industry and ANSI/Infocomm 10:2013, AV Systems Performance Verification to ensure adequate system performance.

B. Measure and document system performance against the following minimum criteria. Where system performance criteria are not met, take corrective action as required to bring system performance into compliance with criteria listed here and in the referenced performance documents. Where criteria listed below and those in the referenced performance documents are in disagreement, the more stringent are in effect. Where criteria listed below and those in the reference performance documents cannot be met by no fault of the Contractor, Contractor to indicate this along with shop drawing submittals.

1. Audio

   a. Head room level: 10 dB
   b. Audio electrical SNR: ≥60 dB
   c. Audio system output level variance: ≤±1 dB
   d. Program audio signal sources should be balanced at the input stage to generate a level variance not to exceed ±1 dB
   e. The system under test shall produce a flat frequency response (+/-0.5dB) from 20 Hz to 20 kHz.
   f. Speech Transmission Index: ≥0.66
   g. Audio power amplifier channels shall not be loaded beyond their rated capacity
   h. Voice reinforcement shall be stable. No audible feedback is acceptable.
   i. Balance/adjust audio and videoconferencing microphone gains and lobes such that standard voices (60dB, 1m) at each seated conferencing position produce a signal level variance of ≤±3 dB.
   j. Audio only system latency: ≤2 ms.
   k. Total Harmonic Distortion: <1%
   l. Acoustic echo cancellation: no perceptible echo (>55dB cancellation)

2. Video

   a. Display resolution: minimum 1080p compatible
   b. Camera resolution: 1080p compatible
   c. Digital displays shall be free from artifacts and faithfully display program content.
   d. Confirm optimal brightness, contrast and color in displays using SMPTE source
   e. Where multiple displays are visible in the same area, demonstrate color consistency throughout, where applicable.
   f. Verify that displayed images are free from visible distortion
   g. 0 pixel failures per display
   h. Confirm even illumination across displays. No location shall be measured to be greater than +10% or -5% the average illumination.
   i. Test all digital video signal chains to ensure HDCP is carried through, enabling display of protected content at all locations, U.O.N.

j. Audio/video system latency (lip sync) shall not exceed +20 ms/-40ms

3. Control, Power, Compatibility, Other

a. Ensure system components are powered up and down in sequence. Audio power amplifiers shall power up last and power down first. Control processors should never power down.
b. Ensure manufacturer's recommended cable bend radii are not exceeded.
c. Demonstrate audio and video teleconferencing compatibility with all anticipated far-end soft codecs, including, at a minimum, Google Hangouts, Skype, and Zoom.
d. Ensure control system performs listed functions as indicated and described in the contract documents while remaining synced with audiovisual system components and external system hardware and software

3.10 STARTUP SERVICE

A. Schedule: Inform PSU OIT personnel a minimum of two weeks prior to anticipated completion of system installation, so that Owner has sufficient time to schedule programming effort. This schedule shall also include a minimum three-week period for system adjustments, troubleshooting, etc. before the project's scheduled completion.

B. Perform startup service:

1. Verify that electrical wiring installation complies with manufacturer's submittal and installation requirements.

2. Complete installation and startup checks according to manufacturer's written instructions.

3. Conduct system verification tests to ensure system performs as intended. Reference "Infocomm Audiovisual Systems Performance Verification Checklist," available at http://www.infocomm.org/cps/rde/xbcr/infocomm/CAVSP_Checklist.pdf. Indicate PASS/FAIL/NOT APPLICABLE for listed criteria and include as System Verification Test Report in Operation and Maintenance submittal. Reference section 1.

3.11 ACCEPTANCE TESTING

A. At completion of startup service and acceptance of system verification test report, schedule site visit with Engineer.

1. Make available to the Engineer the following during acceptance testing

a. Final 'as-built' drawings, shop drawings, floor plans, block diagrams, and equipment manufacturer's operation/setup manuals
b. Source and measurement media/equipment to demonstrate all functions of audiovisual systems
c. Contractor to make adjustments as determined necessary by the Engineer, including physically re-mounting/re-aligning equipment, adjusting gain, equalization, control system GUI, etc.

2. Acceptance testing can be combined with punchlist site visit.

3. Failed acceptance tests requiring rework which cannot be completed during the scheduled acceptance test visit will be grounds for non-acceptance and will require additional acceptance testing at a future date to demonstrate compliance with the project documents.

4. Additional site visits due to acceptance test failures will be the financial responsibility of the Contractor, including hourly billable rate for Engineer, actual travel costs and related expenses.

3.12 WARRANTY

A. Include all provisions of the standard manufacturer-backed warranty for each piece of equipment. Provisions shall remain in effect for a period as stated by the manufacturer. Contractor shall be an authorized service representative for all equipment supplied as part of this project unless appropriate written approval from owner has been granted prior to equipment procurement or installation. The warranty shall also cover the accuracy of technical documentation, and signal quality as specified and documented during the testing process of this project.

B. Contractor to guarantee all work installed under this specification. Make good, repair or replace, at the Contractor's own expense, any defective work, materials or parts which may show themselves within three years after final acceptance, if in the opinion of the Architect or Engineer said defect is due to imperfection in material, design, or workmanship.

C. Provide, as an itemized option, the ability to extend the terms of the warranty described above for one additional year.

3.13 ADJUSTING

A. On-Site Assistance: Engage a factory-authorized service representative to provide on-site assistance in adjusting sound levels, resetting transformer taps, and adjusting controls to meet occupancy conditions.

B. Occupancy Adjustments: When requested within 6 months of date of Substantial Completion, provide on-site assistance in adjusting system to suit actual occupied conditions. Provide up to two visits to Project during other-than-normal occupancy hours for this purpose.

3.14 DEMONSTRATION

A. Train Owner's maintenance personnel to adjust, operate, and maintain the Integrated Audio-Video Systems and Equipment. Provide video recording of this training and include in Operations and Maintenance manual on USB flash drive format.

END OF SECTION

\\PDXDATA1\Jobs\2018\02.18.00825 PSU Campus Audiovisual Standards\Drawings\AutoCAD\AV200 - Conference Room - Display.dwg, 6/22/2018 1:42:42 PM, Bluebeam PDF

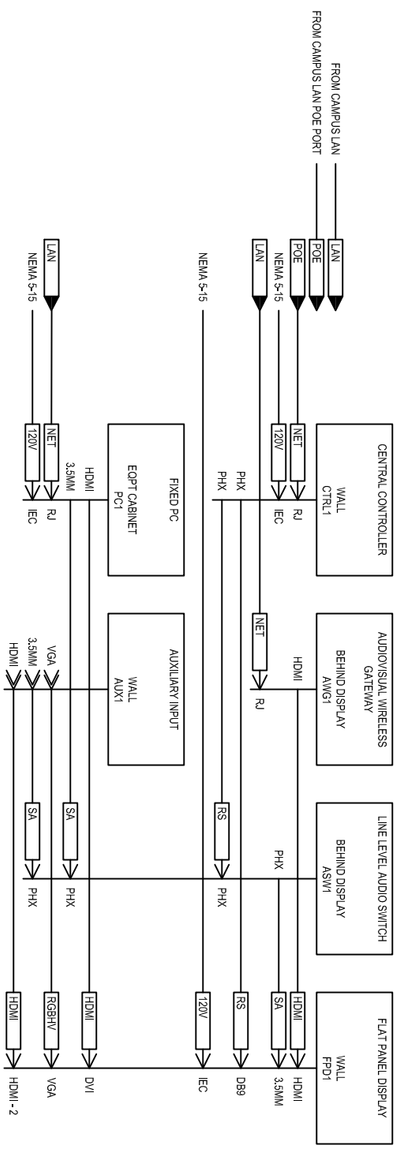

Portland State UNIVERSITY

DWG. TITLE:	AUDIOVISUAL SYSTEM BLOCK DIAGRAM	DATE:	2018-06-22
	CONFERENCE ROOM – FLAT PANEL DISPLAY	REF:	
REVISION:	003	SCALE:	N.T.S.
PROJECT:	PORTLAND STATE UNIV. AV STANDARDS UPDATES	DWG. NO:	**AV200**

INTEGRATED AUDIOVISUAL SYSTEMS AND EQUIPMENT FOR CONFERENCE ROOMS

(INTERACTIVE)

PART 1 - GENERAL

1.1 RELATED DOCUMENTS

A. Drawings and general provisions of the Contract, including General and Supplementary Conditions and Division 01 Specification Sections, apply to this Section.

B. ANSI/Infocomm 1M-2009, Audio Coverage Uniformity in Enclosed Listener Areas

C. ANSI/Infocomm 10: 2013, AV Systems Performance Verification 89

D. ANSI/Infocomm 3M-2011, Projected Image Contrast Ratio

E. Infocomm F501-01:2015, Cable Labeling for Audiovisual Systems

F. NFPA 70, National Electrical Code, as adopted and amended by the local jurisdiction

G. IBC, International Building Code as adopted and amended by the local jurisdiction

1.2 SUMMARY

A. Section Includes:

1. Integrated audio and visual equipment and systems, including control equipment and systems, cabling, mounting, furniture and appurtenances.

1.3 EQUIPMENT PROVISION

A. Audiovisual system equipment shall be assumed to be furnished by Owner and installed by Contractor unless noted otherwise in project documents.

B. Audiovisual system cabling and appurtenances shall be assumed to be furnished and installed by Contractor unless noted otherwise in project documents.

C. Workmanship and equipment shall adhere to the latest referenced codes and standards of the following organizations:

1. American National Standards Institute
2. National Electrical Manufacturer’s Association
3. National Fire Protection Association
4. Underwriter’s Laboratories

1.4 QUALIFICATIONS

A. The Contractor responsible for the work of this section shall be a factory-authorized dealer, where applicable, for the major components specified. Explicit exceptions may be granted by the Engineer or by PSU OIT personnel; provide written request with the bid for services.

B. The Contractor responsible for the work of this section shall have at least one systems technician certified by Infocomm International as a Certified Technology Specialist – Installation OR a lead installer with at least 5 years verifiable field installation experience.

C. The Contractor responsible for the work of this section shall be licensed, bonded and insured to perform this work in the project location.

D. The Contractor responsible for the work of this section shall be factory certified for the programming of installed equipment, including control systems, DSPs, encoders, decoders, etc. The Owner will be responsible for system programming unless otherwise noted in the project documents.

1.5 ACTION SUBMITTALS

A. Contractor Qualifications:

1. For projects following a design-build format, where the Contractor is submitting a bid directly to the Owner, and not bidding based on an Architect/Engineer designed bid package, provide the following qualifications with bid package:

a. Personnel: Submit project team resumes project manager, foreman, and lead on-site technician. List Infocomm or other applicable certifications for each.
b. Project Experience: Submit a description of a minimum of three (3) project references of similar size and scope.

2. For projects following a design-bid-build format, where the Contractor is submitting a bid based on an Architect/Engineer designed bid package, provide the following qualifications with product data submittals if awarded the bid:

a. Project Experience: Submit a description of a minimum of three (3) project references of similar size and scope.

B. Product datasheets of specific equipment that will be installed in the system. Where product datasheets show multiple items, options, or accessories, indicate on the datasheet the particular item/options/accessories that will be provided, and if the products are Owner-Furnished Owner Installed (OFOI), Owner-Furnished Contractor Installed (OFCI), or Contractor-Furnished Contractor Installed (CFCI). The intent of the requirement for Contractor to submit product data for

items furnished by Owner are to allow for review that Contractor clearly understands the delineation of scope for procurement.

C. Shop Drawings:

1. Provide audiovisual system block diagrams showing all equipment and detailed connections between components. Include designators/proposed labeling for equipment and cabling runs to correspond with those in floorplans.
2. Provide floorplans with equipment, cabling, and pathways. Indicate cabling quantities and types and pathway quantities and sizes.
3. Provide layouts/elevations of audiovisual equipment racks
4. Where indicated in a request-for-proposal (RFP), invitation-to-bid (ITB), or elsewhere in the project documents, that the Contractor's scope will include system programming, provide drawings of all touchscreen/user interface pages and popups, indicating functionality of all buttons and logical links between pages/popups.
    a. Provide overview/flowchart for the proposed layout and architecture of the control interface.
    b. Provide annotated screenshots of all proposed pages, indicating functions for each button.
    c. Indicate which pages are accessible to general users and which are accessible only to technicians/authorized users. Provide a description of system behavior during standby, startup, and shutdown.
5. Refer to System Performance Criteria in Part 3 of this specification for additional requirements.

1.6 CLOSEOUT SUBMITTALS

A. Operation and Maintenance Data - Provide operation and maintenance manual. Manual shall include job name, completion date, and names and contact information of Owner, Architect, Engineer, and Contractor. Operation and Maintenance manual shall include

1. System operation instructions for the installed system
2. Product datasheet submittal material
3. Manufacturer's operation manuals for installed equipment
4. System block diagrams
5. Schedule of manufacturer, model and serial numbers for audiovisual system equipment
6. List of consumable parts and contact information for ordering spares

7. System verification test reports
8. Video recording of Owner training session(s) – for specialty systems only.
9. Custom code created for the project, in uncompiled and editable format if programming is provided under the Contractor's scope, and not by Owner.
10. Warranty information, including warranty contract and contact information for engaging warranty service from the Contractor responsible for the work of this section, and manufacturer warranty information for installed equipment.

B. Provide PDF set of As-Built drawings showing final locations of equipment, cabling, and cable pathways. Include 1 set with the operation and maintenance data submittal for handover to Owner. 1 set shall become project record drawings for the work of this section.

1.7 SYSTEM DESCRIPTION

A. Responsibilities of this section include

1. Provision of complete and working systems as described in the project documents and drawings.
2. Complete integration with systems, architectural features and equipment provided by others.
3. Complete integration with Owner's existing AV systems and facility management software.
4. Generation of submittals and documentation as described in the project documents and drawings.
5. Provision and on-site installation of subject systems, including equipment, cabling, furniture, interfaces, infrastructure and appurtenances as required to deliver a complete system.
6. Coordination with Owner for staging, cleaning, refurbishment and delivery of Owner furnished equipment.
7. Coordination with general Contractor, Owner, audiovisual systems consultant and other disciplines.
8. Initial adjustment of the systems and provision of test equipment for system checkout and acceptance tests.
9. Training in the operation and maintenance of the systems for personnel designated by the Owner.

10. System programming where indicated in the RFP, ITB, or project documents; otherwise, programming is provided by Owner.

B. Functional Description

1. Use: Conference rooms with interactive flat panel displays will be used for local audio-visual presentations. Interactive display will be used as a human interface device.

2. Equipment

a. Fixed PC
b. Wired auxiliary input
c. Wireless gateway
d. Audio and video processing, routing and amplification equipment
e. Control System Processor
f. Flat panel display with integrated loudspeakers and touch sensitive overlay

1.8 COORDINATION WITH OTHER TRADES

A. Electrical, Lighting, Telecommunication

1. Where audiovisual displays (projection screens, flat panel displays, etc) are present, coordinate with lighting designer to provide additional switch zone for lights near display to minimize ambient light at display surface

2. Coordinate with division 26 to provide dedicated 20A circuits at flat panel display, projector, and podium locations.

3. Coordinate with division 27 to provide necessary data and POE drops at audiovisual equipment locations. Refer to audiovisual system block diagrams for quantity, and provide at a minimum:

a. Podium location: 6 jacks
b. Flat panel display locations: 2 jacks

B. Multiple Disciplines

1. Where audiovisual displays (projection screens, flat panel displays, etc) are present, coordinate with other trades to ensure sightlines and projection path(s) are free from obstruction, including architectural features, pendant light fixtures, fire sprinklers, wireless access points, etc.

2. Where projection screens and microphones are present, coordinate locations with HVAC diffusers to minimize acoustic interference and physical movement.

PART 2 - PRODUCTS

2.1 MANUFACTURERS AND EQUIPMENT

A. Provide equipment as listed in the audiovisual equipment schedules.

B. Materials and equipment installed under the work of this section must be produced by manufacturers with a minimum of 5 years' experience, and whose product literature demonstrates compliance with this section and the referenced codes and standards.

C. Manufacturers and model numbers indicated in this specification, the audiovisual equipment schedules, diagrams or elsewhere in the project documents represent PSU standard equipment. Substitutions will not be accepted without written documentation from PSU OIT personnel.

D. Materials and equipment provided shall be new and meet or exceed performance requirements of those listed in the audiovisual equipment schedules.

E. In the event that specified material or equipment has reached end of life at the time of procurement, Contractor shall seek direction from PSU OIT, Engineer, or Architect.

F. Equipment must be UL listed.

G. Unless otherwise noted, equipment accessories shall be manufactured by the manufacturer of the equipment that they accessorize.

H. Equipment substitutions must be requested in accordance with Division 01 and will be evaluated against Owner standards, performance, reliability, functionality, and in some cases, aesthetics. Substitution requests shall include justification for the proposed substitution.

I. Where Owner furnished and/or existing equipment is being used in the installation, Contractor is responsible for cleaning, accessorizing, replacing consumable parts with new, and testing said equipment prior to installation.

2.2 MOUNTING EQUIPMENT

A. Install mounting hardware as required for a finished installation of all equipment, including speakers, projectors, flat panel displays, rack-mounted equipment, control panels, and others. Where mounting hardware is not scheduled, it is nonetheless assumed to be included in the bid documents. Install accessories for equipment racks as required for a complete installation, including power distribution and covers.

B. Provide physical security measures for all audiovisual equipment in classrooms, including security mounts, screws, locking clamps, podiums, and drawers, retractable cables for wireless remote controls and audible alarms.

2.3 PROJECTION SCREENS

A. Projection screens shall:

1. Have 16:10 aspect ratio
2. Have controlled screen return for image width <120”
3. Be electrically raised/lowered for image width ≥120”

B. Sizing

1. Minimum projection screen image width shall be 96”
2. Projection screen images shall be sized such that the image height is greater than or equal to the distance to the least favored viewer divided by 5, except where limited by room architecture. If room architecture limits projection screen size, coordinate with PSU OIT-ITS, architect or engineer for direction.
3. Bottom of projected image shall be no lower than 42” above finished floor

2.4 WIRING AND CABLE

A. Provide wiring and cable from the following manufacturers, as appropriate for the installation

ID	CABLE TYPE	MANUFACTURER	MODEL
70V	70V Speaker Wire	LIBERTY	20-2C-TTPSH
8Ω	8Ω	LIBERTY	1x-2C
COMP	Composite Video	LIBERTY	RG59-CCTV
DP	Display Port	LIBERTY	E-DPM
HDBT	HD BaseT	COVIDE	P-C6F-BLU
HDMI	High Definition Multimedia Inter-	LIBERTY	HDPMM
LA	Line Level Audio	LIBERTY	20-2C-SH
MIC	Microphone Level Audio	LIBERTY / GEPCO	MP1201
NET	Network Cable	LIBERTY	24-4P-L6
POE	Power Over Ethernet Network	LIBERTY	24-4P-L6
RGBHV	Red/Green/Blue/Horiz/Vert	LIBERTY	RGB5C-25-CMP
RS	RS232	LIBERTY	24-2P-485
SA	Stereo Line Level Audio	LIBERTY	22-2P-INDSH
USB	Universal Serial Bus	LIBERTY	E-USB3x

PART 3 - EXECUTION

3.1 COORDINATION

A. Interface and coordinate the work of this section with that of other trades and examine drawings and specifications of other trades including mechanical, electrical, telecommunications, architectural, and structural for construction details and coordination.

B. Confirm exact installation location of all devices with Owner / Architect / interior designer prior to rough-in, including, but not limited to equipment installed in front of house spaces, equipment installed in custom assemblies, and equipment installed or routed through millwork / casework.

C. Coordinate layout and installation of system components and suspension system with other construction that penetrates ceilings or is supported by them, including, but not limited to, light fixtures, HVAC equipment, fire-suppression system, and partition assemblies. This includes coordination to confirm moving objects have a clear path of travel and confirmation that projected image paths are clear from obstruction.

D. Coordinate with architectural and structural to reinforce walls where audiovisual equipment is scheduled for mounting. Design for actual equipment weight with a 2x safety factor, minimum 100 lbs. Coordinate these reinforcements with division 26 and 27 and PSU OIT-ITS and facilities to ensure power and data services are accounted for.

3.2 NETWORKING

A. Where Owner provided active and passive networking equipment is used as a part of the audiovisual installation, coordinate with Owner's representatives to ensure said networking equipment meets or exceeds specifications and is configured as required by the manufacturers of the audiovisual equipment that will reside on the network.

B. Coordinate with data/telecom Contractor to combine pathways for networking and low-voltage category cabling where allowable.

3.3 CUSTOM SOFTWARE / USER INTERFACE

A. Where indicated in the RFP, ITB, or elsewhere in the project documents, that the Contractor's scope will include system programming, adhere to the following requirements:

1. Provide a unified User Interface (UI) throughout the project with consistent design language throughout.

2. The UI should be consistent for all systems, even where different touch panel models are used.

3. Provide color printouts of all UI pages and popups for review. Coordinate with owner for audiovisual control system user interfaces, including owner's branding as required, and obtaining final approval from owner for control system UI screens. Approval shall be by signed affidavit.

3.4 INSTALLATION OF RACEWAYS

A. Coordinate raceways with Electrical Contractor (EC) prior to rough-in. This includes providing detailed conduit, box, and raceways requirements to EC with sufficient time for procurement of materials, coordination with other trades, etc. with no delay in the overall construction schedule.

B. Power, signal and control wiring for audiovisual systems shall each be routed in dedicated conduits, unless otherwise noted.

C. Where conduit pathways are installed with spare capacity, provide pullstring to aid in future cable installation.

D. Where spare conduit pathways are provided, provide pullstring or mule tape to aid in future cable installation.

E. Label each end of conduit to indicate location of other end.

F. Classrooms

1. Provide wallbox at front corner of room near teaching station, maximum 3'-0" from corner. Provide pathways to wallbox:
   a. (1) 1" conduit for audio and video cables to flat panel display / projector location
   b. (1) ¾" conduit stub to ceiling space for speaker level audio cabling. Where ceilings are open to structure, or in other cases where speaker cable runs are visible, provide ¾" conduit pathways for entirety of cable run.
   c. (1) ¾" conduit from branch panel for line voltage
   d. (1) 1" conduit from IDF for network cabling

2. Provide wall boxes for flat panel displays. Provide pathways to wall box:
   a. (1) 2" conduit to teaching station wallbox
   b. (1) ¾" conduit for line voltage
   c. (1) 1" conduit for network cabling

3. Provide ceiling boxes for projectors. Provide pathways to ceiling box:
    a. (1) 2” conduit to teaching station wallbox
    b. (1) ¾” conduit for line voltage
    c. (1) 1” conduit for network cabling

3.5 WIRING METHODS

A. Wiring Method: Unless otherwise noted, in “front of house” spaces, wire and cable pathways shall be concealed in accessible ceilings, walls, and floor. Reference drawing details, if provided in the project documents, and coordinate with Architect to ensure desired aesthetic is maintained. Wire and cable to be supported independently of other systems or work by other trades, in a means acceptable to NEC requirements.

B. Wiring within Enclosures: Bundle, lace, and train cables to terminal points with only the necessary excess and without exceeding manufacturer's limitations on bending radii. Provide proper cable slack and management within slide-out and rotating racks to allow for maintenance access while system is still operational, without damaging cables. Where possible, use hook-and-loop type cable ties, not zip-ties.

C. Use hard plastic spiral wrap for cable bundles from wall or floor outlets to podium/lecterns, conference room table pop-up boxes, etc. or anywhere cabling is exposed to potential damage by end-users. Cloth mesh type cable wrap is not accessible.

3.6 INSTALLATION OF CABLES

A. General Cable Installation Requirements:

1. Terminate conductors; no cable shall contain un-terminated elements. Make terminations only at outlets and terminals.
2. Secure and support cables at intervals not exceeding 30 inches and not more than 6 inches from cabinets, boxes, fittings, outlets, racks, and terminals. Wire and cable to be supported independently of other systems or work by other trades, in a means acceptable to NEC requirements.
3. Do not install bruised, kinked, scored, deformed, or abraded cable. Do not splice cable between termination, tap, or junction points. Remove and discard cable if damaged during installation and replace it with new cable.
4. Maintain maximum separation from line voltage conductors. Where line voltage conductors must cross signal cabling, cross at right angles.

B. Cable Labeling: Affix permanent machine printed labels to all cables in the audiovisual system, including power cables. Barcode labels are acceptable, but must also be accompanied by a text label readable without machine assistance. Text height shall be minimum 2.5mm, and label shall be within 1-12 inches of termination, the end of unterminated cable, or the exit of cable jacketing or strain-relief. Cable labeling shall correspond with cable schedule and shop drawings. Label cabling in accordance with Infocomm F501.01:2015

3.7 WIRELESS SYSTEMS

A. Confirm frequency range of specified wireless systems and equipment is appropriate for local regulations and is free from interference. Coordinate licensing for wireless systems as required.

B. Where multiple wireless systems are present, coordinate frequency ranges to prevent interference between systems.

C. Provide remote antenna(s), mounting, cabling and appurtenances as required for wireless transmitters/receivers as needed to ensure wireless system performance is free from dropouts, bad reception, static, and interference.

3.8 INSTALLATION

A. Equipment shall be mounted firmly in place with permanent hardware adequate to support the equipment with a 3x weight multiplier safety factor. Fixed equipment shall be braced for seismic activity as required by the local jurisdiction.

B. Wall-Mounted Outlets: Flush mounted unless otherwise noted in project documents. Where installing flush-mounted outlets is not possible, seek approval for surface-mounted devices from Architect, Engineer, or PSU OIT personnel.

C. Finishes: Coordinate finishes with Architect for exposed equipment, including speakers, wallplates, etc.

D. Provide accessories, backboxes, pathways, mounting hardware, decorative trim, escutcheons cabling, and ancillary equipment to provide a complete and functioning system as outlined in these specifications and project drawings.

3.9 SYSTEM PERFORMANCE CRITERIA

A. Perform tests and measurements in accordance with AV9000:2011 Quality Management System for the Audio Visual Technology Industry and ANSI/Infocomm 10:2013, AV Systems Performance Verification to ensure adequate system performance.

B. Measure and document system performance against the following minimum criteria. Where system performance criteria are not met, take corrective action as required to bring system performance into compliance with criteria listed here and in the referenced performance documents. Where criteria listed below and those in the referenced performance documents are in disagreement, the more stringent are in effect. Where criteria listed below and those in the reference performance documents cannot be met by no fault of the Contractor, Contractor to indicate this along with shop drawing submittals.

1. Audio

   a. Head room level: 10 dB
   b. Audio electrical SNR: ≥60 dB
   c. Audio system output level variance: ≤±1 dB
   d. Program audio signal sources should be balanced at the input stage to generate a level variance not to exceed ±1 dB
   e. The system under test shall produce a flat frequency response (+/-0.5dB) from 20 Hz to 20 kHz.
   f. Speech Transmission Index: ≥0.66
   g. Audio power amplifier channels shall not be loaded beyond their rated capacity
   h. Voice reinforcement shall be stable. No audible feedback is acceptable.
   i. Balance/adjust audio and videoconferencing microphone gains and lobes such that standard voices (60dB, 1m) at each seated conferencing position produce a signal level variance of ≤±3 dB.
   j. Audio only system latency: ≤2 ms.
   k. Total Harmonic Distortion: <1%
   l. Acoustic echo cancellation: no perceptible echo (>55dB cancellation)

2. Video

   a. Display resolution: minimum 1080p compatible
   b. Camera resolution: 1080p compatible
   c. Digital displays shall be free from artifacts and faithfully display program content.
   d. Confirm optimal brightness, contrast and color in displays using SMPTE source
   e. Where multiple displays are visible in the same area, demonstrate color consistency throughout, where applicable.
   f. Verify that displayed images are free from visible distortion
   g. 0 pixel failures per display
   h. Confirm even illumination across displays. No location shall be measured to be greater than +10% or -5% the average illumination.
   i. Test all digital video signal chains to ensure HDCP is carried through, enabling display of protected content at all locations, U.O.N.

j. Audio/video system latency (lip sync) shall not exceed +20 ms/-40ms

3. Control, Power, Compatibility, Other

a. Ensure system components are powered up and down in sequence. Audio power amplifiers shall power up last and power down first. Control processors should never power down.
b. Ensure manufacturer's recommended cable bend radii are not exceeded.
c. Demonstrate audio and video teleconferencing compatibility with all anticipated far-end soft codecs, including, at a minimum, Google Hangouts, Skype, and Zoom.
d. Ensure control system performs listed functions as indicated and described in the contract documents while remaining synced with audiovisual system components and external system hardware and software

3.10 STARTUP SERVICE

A. Schedule: Inform PSU OIT personnel a minimum of two weeks prior to anticipated completion of system installation, so that Owner has sufficient time to schedule programming effort. This schedule shall also include a minimum three-week period for system adjustments, troubleshooting, etc. before the project's scheduled completion.

B. Perform startup service:

1. Verify that electrical wiring installation complies with manufacturer's submittal and installation requirements.

2. Complete installation and startup checks according to manufacturer's written instructions.

3. Conduct system verification tests to ensure system performs as intended. Reference "Infocomm Audiovisual Systems Performance Verification Checklist," available at http://www.infocomm.org/cps/rde/xbcr/infocomm/CAVSP_Checklist.pdf. Indicate PASS/FAIL/NOT APPLICABLE for listed criteria and include as System Verification Test Report in Operation and Maintenance submittal. Reference section 1.

3.11 ACCEPTANCE TESTING

A. At completion of startup service and acceptance of system verification test report, schedule site visit with Engineer.

1. Make available to the Engineer the following during acceptance testing

a. Final 'as-built' drawings, shop drawings, floor plans, block diagrams, and equipment manufacturer's operation/setup manuals
b. Source and measurement media/equipment to demonstrate all functions of audiovisual systems
c. Contractor to make adjustments as determined necessary by the Engineer, including physically re-mounting/re-aligning equipment, adjusting gain, equalization, control system GUI, etc.

2. Acceptance testing can be combined with punchlist site visit.

3. Failed acceptance tests requiring rework which cannot be completed during the scheduled acceptance test visit will be grounds for non-acceptance and will require additional acceptance testing at a future date to demonstrate compliance with the project documents.

4. Additional site visits due to acceptance test failures will be the financial responsibility of the Contractor, including hourly billable rate for Engineer, actual travel costs and related expenses.

3.12 WARRANTY

A. Include all provisions of the standard manufacturer-backed warranty for each piece of equipment. Provisions shall remain in effect for a period as stated by the manufacturer. Contractor shall be an authorized service representative for all equipment supplied as part of this project unless appropriate written approval from owner has been granted prior to equipment procurement or installation. The warranty shall also cover the accuracy of technical documentation, and signal quality as specified and documented during the testing process of this project.

B. Contractor to guarantee all work installed under this specification. Make good, repair or replace, at the Contractor's own expense, any defective work, materials or parts which may show themselves within three years after final acceptance, if in the opinion of the Architect or Engineer said defect is due to imperfection in material, design, or workmanship.

C. Provide, as an itemized option, the ability to extend the terms of the warranty described above for one additional year.

3.13 ADJUSTING

A. On-Site Assistance: Engage a factory-authorized service representative to provide on-site assistance in adjusting sound levels, resetting transformer taps, and adjusting controls to meet occupancy conditions.

B. Occupancy Adjustments: When requested within 6 months of date of Substantial Completion, provide on-site assistance in adjusting system to suit actual occupied conditions. Provide up to two visits to Project during other-than-normal occupancy hours for this purpose.

3.14 DEMONSTRATION

A. Train Owner's maintenance personnel to adjust, operate, and maintain the Integrated Audio-Video Systems and Equipment. Provide video recording of this training and include in Operations and Maintenance manual on USB flash drive format.

END OF SECTION

\\PDXDATA1\Jobs\2018\02.18.00825 PSU Campus Audiovisual Standards\Drawings\AutoCAD\AV201 - Conference Room - Interactive.dwg, 6/22/2018 1:42:53 PM, Bluebeam PDF

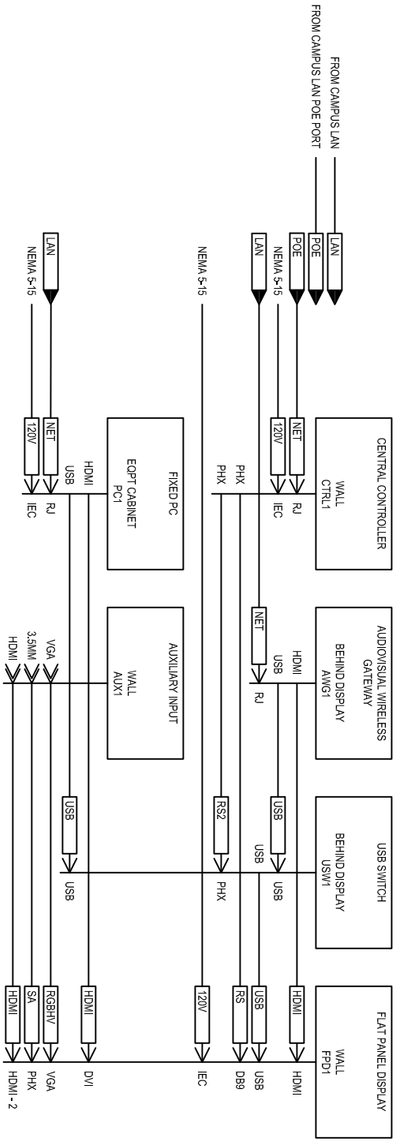

Portland State UNIVERSITY

DWG. TITLE:	AUDIOVISUAL SYSTEM BLOCK DIAGRAM	DATE:	2018–06–22
	CONFERENCE ROOM – INTERACTIVE DISPLAY	REF:	
REVISION:	003	SCALE:	N.T.S.
PROJECT:	PORTLAND STATE UNIV. AV STANDARDS UPDATES	DWG. NO:	**AV201**

INTEGRATED AUDIOVISUAL SYSTEMS AND EQUIPMENT FOR CONFERENCE ROOMS

(PROJECTOR)

PART 1 - GENERAL

1.1 RELATED DOCUMENTS

A. Drawings and general provisions of the Contract, including General and Supplementary Conditions and Division 01 Specification Sections, apply to this Section.

B. ANSI/Infocomm 1M-2009, Audio Coverage Uniformity in Enclosed Listener Areas

C. ANSI/Infocomm 10: 2013, AV Systems Performance Verification 89

D. ANSI/Infocomm 3M-2011, Projected Image Contrast Ratio

E. Infocomm F501-01:2015, Cable Labeling for Audiovisual Systems

F. NFPA 70, National Electrical Code, as adopted and amended by the local jurisdiction

G. IBC, International Building Code as adopted and amended by the local jurisdiction

1.2 SUMMARY

A. Section Includes:

1. Integrated audio and visual equipment and systems, including control equipment and systems, cabling, mounting, furniture and appurtenances.

1.3 EQUIPMENT PROVISION

A. Audiovisual system equipment shall be assumed to be furnished by Owner and installed by Contractor unless noted otherwise in project documents.

B. Audiovisual system cabling and appurtenances shall be assumed to be furnished and installed by Contractor unless noted otherwise in project documents.

C. Workmanship and equipment shall adhere to the latest referenced codes and standards of the following organizations:

1. American National Standards Institute
2. National Electrical Manufacturer’s Association
3. National Fire Protection Association
4. Underwriter’s Laboratories

1.4 QUALIFICATIONS

A. The Contractor responsible for the work of this section shall be a factory-authorized dealer, where applicable, for the major components specified. Explicit exceptions may be granted by the Engineer or by PSU OIT personnel; provide written request with the bid for services.

B. The Contractor responsible for the work of this section shall have at least one systems technician certified by Infocomm International as a Certified Technology Specialist – Installation OR a lead installer with at least 5 years verifiable field installation experience.

C. The Contractor responsible for the work of this section shall be licensed, bonded and insured to perform this work in the project location.

D. The Contractor responsible for the work of this section shall be factory certified for the programming of installed equipment, including control systems, DSPs, encoders, decoders, etc. The Owner will be responsible for system programming unless otherwise noted in the project documents.

1.5 ACTION SUBMITTALS

A. Contractor Qualifications:

1. For projects following a design-build format, where the Contractor is submitting a bid directly to the Owner, and not bidding based on an Architect/Engineer designed bid package, provide the following qualifications with bid package:

a. Personnel: Submit project team resumes project manager, foreman, and lead on-site technician. List Infocomm or other applicable certifications for each.
b. Project Experience: Submit a description of a minimum of three (3) project references of similar size and scope.

2. For projects following a design-bid-build format, where the Contractor is submitting a bid based on an Architect/Engineer designed bid package, provide the following qualifications with product data submittals if awarded the bid:

a. Project Experience: Submit a description of a minimum of three (3) project references of similar size and scope.

B. Product datasheets of specific equipment that will be installed in the system. Where product datasheets show multiple items, options, or accessories, indicate on the datasheet the particular item/options/accessories that will be provided, and if the products are Owner-Furnished Owner Installed (OFOI), Owner-Furnished Contractor Installed (OFCI), or Contractor-Furnished Contractor Installed (CFCI). The intent of the requirement for Contractor to submit product data for

items furnished by Owner are to allow for review that Contractor clearly understands the delineation of scope for procurement.

C. Shop Drawings:

1. Provide audiovisual system block diagrams showing all equipment and detailed connections between components. Include designators/proposed labeling for equipment and cabling runs to correspond with those in floorplans.
2. Provide floorplans with equipment, cabling, and pathways. Indicate cabling quantities and types and pathway quantities and sizes.
3. Provide layouts/elevations of audiovisual equipment racks
4. Where indicated in a request-for-proposal (RFP), invitation-to-bid (ITB), or elsewhere in the project documents, that the Contractor's scope will include system programming, provide drawings of all touchscreen/user interface pages and popups, indicating functionality of all buttons and logical links between pages/popups.
    a. Provide overview/flowchart for the proposed layout and architecture of the control interface.
    b. Provide annotated screenshots of all proposed pages, indicating functions for each button.
    c. Indicate which pages are accessible to general users and which are accessible only to technicians/authorized users. Provide a description of system behavior during standby, startup, and shutdown.
5. Refer to System Performance Criteria in Part 3 of this specification for additional requirements.

1.6 CLOSEOUT SUBMITTALS

A. Operation and Maintenance Data - Provide operation and maintenance manual. Manual shall include job name, completion date, and names and contact information of Owner, Architect, Engineer, and Contractor. Operation and Maintenance manual shall include

1. System operation instructions for the installed system
2. Product datasheet submittal material
3. Manufacturer's operation manuals for installed equipment
4. System block diagrams
5. Schedule of manufacturer, model and serial numbers for audiovisual system equipment
6. List of consumable parts and contact information for ordering spares

7. System verification test reports
8. Video recording of Owner training session(s) – for specialty systems only.
9. Custom code created for the project, in uncompiled and editable format if programming is provided under the Contractor's scope, and not by Owner.
10. Warranty information, including warranty contract and contact information for engaging warranty service from the Contractor responsible for the work of this section, and manufacturer warranty information for installed equipment.

B. Provide PDF set of As-Built drawings showing final locations of equipment, cabling, and cable pathways. Include 1 set with the operation and maintenance data submittal for handover to Owner. 1 set shall become project record drawings for the work of this section.

1.7 SYSTEM DESCRIPTION

A. Responsibilities of this section include

1. Provision of complete and working systems as described in the project documents and drawings.
2. Complete integration with systems, architectural features and equipment provided by others.
3. Complete integration with Owner's existing AV systems and facility management software.
4. Generation of submittals and documentation as described in the project documents and drawings.
5. Provision and on-site installation of subject systems, including equipment, cabling, furniture, interfaces, infrastructure and appurtenances as required to deliver a complete system.
6. Coordination with Owner for staging, cleaning, refurbishment and delivery of Owner furnished equipment.
7. Coordination with general Contractor, Owner, audiovisual systems consultant and other disciplines.
8. Initial adjustment of the systems and provision of test equipment for system checkout and acceptance tests.
9. Training in the operation and maintenance of the systems for personnel designated by the Owner.

10. System programming where indicated in the RFP, ITB, or project documents; otherwise, programming is provided by Owner.

B. Functional Description

1. Use: Conference rooms with projection systems will be used for local audiovisual presentations.

2. Equipment

a. Fixed PC
b. Wired auxiliary input
c. Wireless gateway
d. Audio and video processing, routing and amplification equipment
e. Control System Processor
f. Digital projector
g. Loudspeakers

1.8 COORDINATION WITH OTHER TRADES

A. Electrical, Lighting, Telecommunication

1. Where audiovisual displays (projection screens, flat panel displays, etc) are present, coordinate with lighting designer to provide additional switch zone for lights near display to minimize ambient light at display surface

2. Coordinate with division 26 to provide dedicated 20A circuits at flat panel display, projector, and podium locations.

3. Coordinate with division 27 to provide necessary data and POE drops at audiovisual equipment locations. Refer to audiovisual system block diagrams for quantity, and provide at a minimum:

a. Podium location: 6 jacks
b. Flat panel display locations: 2 jacks

B. Multiple Disciplines

1. Where audiovisual displays (projection screens, flat panel displays, etc) are present, coordinate with other trades to ensure sightlines and projection path(s) are free from obstruction, including architectural features, pendant light fixtures, fire sprinklers, wireless access points, etc.

2. Where projection screens and microphones are present, coordinate locations with HVAC diffusers to minimize acoustic interference and physical movement.

PART 2 - PRODUCTS

2.1 MANUFACTURERS AND EQUIPMENT

A. Provide equipment as listed in the audiovisual equipment schedules.

B. Materials and equipment installed under the work of this section must be produced by manufacturers with a minimum of 5 years' experience, and whose product literature demonstrates compliance with this section and the referenced codes and standards.

C. Manufacturers and model numbers indicated in this specification, the audiovisual equipment schedules, diagrams or elsewhere in the project documents represent PSU standard equipment. Substitutions will not be accepted without written documentation from PSU OIT personnel.

D. Materials and equipment provided shall be new and meet or exceed performance requirements of those listed in the audiovisual equipment schedules.

E. In the event that specified material or equipment has reached end of life at the time of procurement, Contractor shall seek direction from PSU OIT, Engineer, or Architect.

F. Equipment must be UL listed.

G. Unless otherwise noted, equipment accessories shall be manufactured by the manufacturer of the equipment that they accessorize.

H. Equipment substitutions must be requested in accordance with Division 01 and will be evaluated against Owner standards, performance, reliability, functionality, and in some cases, aesthetics. Substitution requests shall include justification for the proposed substitution.

I. Where Owner furnished and/or existing equipment is being used in the installation, Contractor is responsible for cleaning, accessorizing, replacing consumable parts with new, and testing said equipment prior to installation.

2.2 MOUNTING EQUIPMENT

A. Install mounting hardware as required for a finished installation of all equipment, including speakers, projectors, flat panel displays, rack-mounted equipment, control panels, and others. Where mounting hardware is not scheduled, it is nonetheless assumed to be included in the bid documents. Install accessories for equipment racks as required for a complete installation, including power distribution and covers.

B. Provide physical security measures for all audiovisual equipment in classrooms, including security mounts, screws, locking clamps, podiums, and drawers, retractable cables for wireless remote controls and audible alarms.

2.3 PROJECTION SCREENS

A. Projection screens shall:

1. Have 16:10 aspect ratio
2. Have controlled screen return for image width <120”
3. Be electrically raised/lowered for image width ≥120”

B. Sizing

1. Minimum projection screen image width shall be 96”
2. Projection screen images shall be sized such that the image height is greater than or equal to the distance to the least favored viewer divided by 5, except where limited by room architecture. If room architecture limits projection screen size, coordinate with PSU OIT-ITS, architect or engineer for direction.
3. Bottom of projected image shall be no lower than 42” above finished floor

2.4 WIRING AND CABLE

A. Provide wiring and cable from the following manufacturers, as appropriate for the installation

ID	CABLE TYPE	MANUFACTURER	MODEL
70V	70V Speaker Wire	LIBERTY	20-2C-TTPSH
8Ω	8Ω	LIBERTY	1x-2C
COMP	Composite Video	LIBERTY	RG59-CCTV
DP	Display Port	LIBERTY	E-DPM
HDBT	HD BaseT	COVIDE	P-C6F-BLU
HDMI	High Definition Multimedia Inter-	LIBERTY	HDPMM
LA	Line Level Audio	LIBERTY	20-2C-SH
MIC	Microphone Level Audio	LIBERTY / GEPCO	MP1201
NET	Network Cable	LIBERTY	24-4P-L6
POE	Power Over Ethernet Network	LIBERTY	24-4P-L6
RGBHV	Red/Green/Blue/Horiz/Vert	LIBERTY	RGB5C-25-CMP
RS	RS232	LIBERTY	24-2P-485
SA	Stereo Line Level Audio	LIBERTY	22-2P-INDSH
USB	Universal Serial Bus	LIBERTY	E-USB3x

PART 3 - EXECUTION

3.1 COORDINATION

A. Interface and coordinate the work of this section with that of other trades and examine drawings and specifications of other trades including mechanical, electrical, telecommunications, architectural, and structural for construction details and coordination.

B. Confirm exact installation location of all devices with Owner / Architect / interior designer prior to rough-in, including, but not limited to equipment installed in front of house spaces, equipment installed in custom assemblies, and equipment installed or routed through millwork / casework.

C. Coordinate layout and installation of system components and suspension system with other construction that penetrates ceilings or is supported by them, including, but not limited to, light fixtures, HVAC equipment, fire-suppression system, and partition assemblies. This includes coordination to confirm moving objects have a clear path of travel and confirmation that projected image paths are clear from obstruction.

D. Coordinate with architectural and structural to reinforce walls where audiovisual equipment is scheduled for mounting. Design for actual equipment weight with a 2x safety factor, minimum 100 lbs. Coordinate these reinforcements with division 26 and 27 and PSU OIT-ITS and facilities to ensure power and data services are accounted for.

3.2 NETWORKING

A. Where Owner provided active and passive networking equipment is used as a part of the audiovisual installation, coordinate with Owner's representatives to ensure said networking equipment meets or exceeds specifications and is configured as required by the manufacturers of the audiovisual equipment that will reside on the network.

B. Coordinate with data/telecom Contractor to combine pathways for networking and low-voltage category cabling where allowable.

3.3 CUSTOM SOFTWARE / USER INTERFACE

A. Where indicated in the RFP, ITB, or elsewhere in the project documents, that the Contractor's scope will include system programming, adhere to the following requirements:

1. Provide a unified User Interface (UI) throughout the project with consistent design language throughout.

2. The UI should be consistent for all systems, even where different touch panel models are used.

3. Provide color printouts of all UI pages and popups for review. Coordinate with owner for audiovisual control system user interfaces, including owner's branding as required, and obtaining final approval from owner for control system UI screens. Approval shall be by signed affidavit.

3.4 INSTALLATION OF RACEWAYS

A. Coordinate raceways with Electrical Contractor (EC) prior to rough-in. This includes providing detailed conduit, box, and raceways requirements to EC with sufficient time for procurement of materials, coordination with other trades, etc. with no delay in the overall construction schedule.

B. Power, signal and control wiring for audiovisual systems shall each be routed in dedicated conduits, unless otherwise noted.

C. Where conduit pathways are installed with spare capacity, provide pullstring to aid in future cable installation.

D. Where spare conduit pathways are provided, provide pullstring or mule tape to aid in future cable installation.

E. Label each end of conduit to indicate location of other end.

F. Classrooms

1. Provide wallbox at front corner of room near teaching station, maximum 3'-0" from corner. Provide pathways to wallbox:
   a. (1) 1" conduit for audio and video cables to flat panel display / projector location
   b. (1) ¾" conduit stub to ceiling space for speaker level audio cabling. Where ceilings are open to structure, or in other cases where speaker cable runs are visible, provide ¾" conduit pathways for entirety of cable run.
   c. (1) ¾" conduit from branch panel for line voltage
   d. (1) 1" conduit from IDF for network cabling

2. Provide wall boxes for flat panel displays. Provide pathways to wall box:
   a. (1) 2" conduit to teaching station wallbox
   b. (1) ¾" conduit for line voltage
   c. (1) 1" conduit for network cabling

3. Provide ceiling boxes for projectors. Provide pathways to ceiling box:
    a. (1) 2” conduit to teaching station wallbox
    b. (1) ¾” conduit for line voltage
    c. (1) 1” conduit for network cabling

3.5 WIRING METHODS

A. Wiring Method: Unless otherwise noted, in “front of house” spaces, wire and cable pathways shall be concealed in accessible ceilings, walls, and floor. Reference drawing details, if provided in the project documents, and coordinate with Architect to ensure desired aesthetic is maintained. Wire and cable to be supported independently of other systems or work by other trades, in a means acceptable to NEC requirements.

B. Wiring within Enclosures: Bundle, lace, and train cables to terminal points with only the necessary excess and without exceeding manufacturer's limitations on bending radii. Provide proper cable slack and management within slide-out and rotating racks to allow for maintenance access while system is still operational, without damaging cables. Where possible, use hook-and-loop type cable ties, not zip-ties.

C. Use hard plastic spiral wrap for cable bundles from wall or floor outlets to podium/lecterns, conference room table pop-up boxes, etc. or anywhere cabling is exposed to potential damage by end-users. Cloth mesh type cable wrap is not accessible.

3.6 INSTALLATION OF CABLES

A. General Cable Installation Requirements:

1. Terminate conductors; no cable shall contain un-terminated elements. Make terminations only at outlets and terminals.

2. Secure and support cables at intervals not exceeding 30 inches and not more than 6 inches from cabinets, boxes, fittings, outlets, racks, and terminals. Wire and cable to be supported independently of other systems or work by other trades, in a means acceptable to NEC requirements.

3. Do not install bruised, kinked, scored, deformed, or abraded cable. Do not splice cable between termination, tap, or junction points. Remove and discard cable if damaged during installation and replace it with new cable.

4. Maintain maximum separation from line voltage conductors. Where line voltage conductors must cross signal cabling, cross at right angles.

B. Cable Labeling: Affix permanent machine printed labels to all cables in the audiovisual system, including power cables. Barcode labels are acceptable, but must also be accompanied by a text label readable without machine assistance. Text height shall be minimum 2.5mm, and label shall be within 1-12 inches of termination, the end of unterminated cable, or the exit of cable jacketing or strain-relief. Cable labeling shall correspond with cable schedule and shop drawings. Label cabling in accordance with Infocomm F501.01:2015

3.7 WIRELESS SYSTEMS

A. Confirm frequency range of specified wireless systems and equipment is appropriate for local regulations and is free from interference. Coordinate licensing for wireless systems as required.

B. Where multiple wireless systems are present, coordinate frequency ranges to prevent interference between systems.

C. Provide remote antenna(s), mounting, cabling and appurtenances as required for wireless transmitters/receivers as needed to ensure wireless system performance is free from dropouts, bad reception, static, and interference.

3.8 INSTALLATION

A. Equipment shall be mounted firmly in place with permanent hardware adequate to support the equipment with a 3x weight multiplier safety factor. Fixed equipment shall be braced for seismic activity as required by the local jurisdiction.

B. Wall-Mounted Outlets: Flush mounted unless otherwise noted in project documents. Where installing flush-mounted outlets is not possible, seek approval for surface-mounted devices from Architect, Engineer, or PSU OIT personnel.

C. Finishes: Coordinate finishes with Architect for exposed equipment, including speakers, wallplates, etc.

D. Provide accessories, backboxes, pathways, mounting hardware, decorative trim, escutcheons cabling, and ancillary equipment to provide a complete and functioning system as outlined in these specifications and project drawings.

3.9 SYSTEM PERFORMANCE CRITERIA

A. Perform tests and measurements in accordance with AV9000:2011 Quality Management System for the Audio Visual Technology Industry and ANSI/Infocomm 10:2013, AV Systems Performance Verification to ensure adequate system performance.

B. Measure and document system performance against the following minimum criteria. Where system performance criteria are not met, take corrective action as required to bring system performance into compliance with criteria listed here and in the referenced performance documents. Where criteria listed below and those in the referenced performance documents are in disagreement, the more stringent are in effect. Where criteria listed below and those in the reference performance documents cannot be met by no fault of the Contractor, Contractor to indicate this along with shop drawing submittals.

1. Audio

   a. Head room level: 10 dB
   b. Audio electrical SNR: ≥60 dB
   c. Audio system output level variance: ≤±1 dB
   d. Program audio signal sources should be balanced at the input stage to generate a level variance not to exceed ±1 dB
   e. The system under test shall produce a flat frequency response (+/-0.5dB) from 20 Hz to 20 kHz.
   f. Speech Transmission Index: ≥0.66
   g. Audio power amplifier channels shall not be loaded beyond their rated capacity
   h. Voice reinforcement shall be stable. No audible feedback is acceptable.
   i. Balance/adjust audio and videoconferencing microphone gains and lobes such that standard voices (60dB, 1m) at each seated conferencing position produce a signal level variance of ≤±3 dB.
   j. Audio only system latency: ≤2 ms.
   k. Total Harmonic Distortion: <1%
   l. Acoustic echo cancellation: no perceptible echo (>55dB cancellation)

2. Video

   a. Display resolution: minimum 1080p compatible
   b. Camera resolution: 1080p compatible
   c. Digital displays shall be free from artifacts and faithfully display program content.
   d. Confirm optimal brightness, contrast and color in displays using SMPTE source
   e. Where multiple displays are visible in the same area, demonstrate color consistency throughout, where applicable.
   f. Verify that displayed images are free from visible distortion
   g. 0 pixel failures per display
   h. Confirm even illumination across displays. No location shall be measured to be greater than +10% or -5% the average illumination.
   i. Test all digital video signal chains to ensure HDCP is carried through, enabling display of protected content at all locations, U.O.N.

j. Audio/video system latency (lip sync) shall not exceed +20 ms/-40ms

3. Control, Power, Compatibility, Other

a. Ensure system components are powered up and down in sequence. Audio power amplifiers shall power up last and power down first. Control processors should never power down.
b. Ensure manufacturer's recommended cable bend radii are not exceeded.
c. Demonstrate audio and video teleconferencing compatibility with all anticipated far-end soft codecs, including, at a minimum, Google Hangouts, Skype, and Zoom.
d. Ensure control system performs listed functions as indicated and described in the contract documents while remaining synced with audiovisual system components and external system hardware and software

3.10 STARTUP SERVICE

A. Schedule: Inform PSU OIT personnel a minimum of two weeks prior to anticipated completion of system installation, so that Owner has sufficient time to schedule programming effort. This schedule shall also include a minimum three-week period for system adjustments, troubleshooting, etc. before the project's scheduled completion.

B. Perform startup service:

1. Verify that electrical wiring installation complies with manufacturer's submittal and installation requirements.

2. Complete installation and startup checks according to manufacturer's written instructions.

3. Conduct system verification tests to ensure system performs as intended. Reference "Infocomm Audiovisual Systems Performance Verification Checklist," available at http://www.infocomm.org/cps/rde/xbcr/infocomm/CAVSP_Checklist.pdf. Indicate PASS/FAIL/NOT APPLICABLE for listed criteria and include as System Verification Test Report in Operation and Maintenance submittal. Reference section 1.

3.11 ACCEPTANCE TESTING

A. At completion of startup service and acceptance of system verification test report, schedule site visit with Engineer.

1. Make available to the Engineer the following during acceptance testing

a. Final 'as-built' drawings, shop drawings, floor plans, block diagrams, and equipment manufacturer's operation/setup manuals
b. Source and measurement media/equipment to demonstrate all functions of audiovisual systems
c. Contractor to make adjustments as determined necessary by the Engineer, including physically re-mounting/re-aligning equipment, adjusting gain, equalization, control system GUI, etc.

2. Acceptance testing can be combined with punchlist site visit.

3. Failed acceptance tests requiring rework which cannot be completed during the scheduled acceptance test visit will be grounds for non-acceptance and will require additional acceptance testing at a future date to demonstrate compliance with the project documents.

4. Additional site visits due to acceptance test failures will be the financial responsibility of the Contractor, including hourly billable rate for Engineer, actual travel costs and related expenses.

3.12 WARRANTY

A. Include all provisions of the standard manufacturer-backed warranty for each piece of equipment. Provisions shall remain in effect for a period as stated by the manufacturer. Contractor shall be an authorized service representative for all equipment supplied as part of this project unless appropriate written approval from owner has been granted prior to equipment procurement or installation. The warranty shall also cover the accuracy of technical documentation, and signal quality as specified and documented during the testing process of this project.

B. Contractor to guarantee all work installed under this specification. Make good, repair or replace, at the Contractor's own expense, any defective work, materials or parts which may show themselves within three years after final acceptance, if in the opinion of the Architect or Engineer said defect is due to imperfection in material, design, or workmanship.

C. Provide, as an itemized option, the ability to extend the terms of the warranty described above for one additional year.

3.13 ADJUSTING

A. On-Site Assistance: Engage a factory-authorized service representative to provide on-site assistance in adjusting sound levels, resetting transformer taps, and adjusting controls to meet occupancy conditions.

B. Occupancy Adjustments: When requested within 6 months of date of Substantial Completion, provide on-site assistance in adjusting system to suit actual occupied conditions. Provide up to two visits to Project during other-than-normal occupancy hours for this purpose.

3.14 DEMONSTRATION

A. Train Owner's maintenance personnel to adjust, operate, and maintain the Integrated Audio-Video Systems and Equipment. Provide video recording of this training and include in Operations and Maintenance manual on USB flash drive format.

END OF SECTION

KEYED NOTES (#)

1. PROVIDE 8 OHM OR 70V SPEAKERS AND CABLING AS REQUIRED BY SYSTEM.

DWG. TITLE: AUDIOVISUAL SYSTEM BLOCK DIAGRAM
CONFERENCE ROOM – PROJECTOR
REVISION: 003
PROJECT: PORTLAND STATE UNIV. AV STANDARDS UPDATES

DATE: 2018–06–22
REF:
SCALE: N.T.S.
DWG. NO: **AV202**

Portland State UNIVERSITY

\\PDXDATA1\Jobs\2018\02.18.00825 PSU Campus Audiovisual Standards\Drawings\AutoCAD\AV202 - Conference Room - Projector, Wall Panel.dwg, 6/22/2018 1:48:44 PM, Bluebeam PDF

INTEGRATED AUDIOVISUAL SYSTEMS AND EQUIPMENT FOR CLASSROOMS

(DUAL PROJECTOR)

PART 1 - GENERAL

1.1 RELATED DOCUMENTS

A. Drawings and general provisions of the Contract, including General and Supplementary Conditions and Division 01 Specification Sections, apply to this Section.

B. ANSI/Infocomm 1M-2009, Audio Coverage Uniformity in Enclosed Listener Areas

C. ANSI/Infocomm 10: 2013, AV Systems Performance Verification 89

D. ANSI/Infocomm 3M-2011, Projected Image Contrast Ratio

E. Infocomm F501-01:2015, Cable Labeling for Audiovisual Systems

F. NFPA 70, National Electrical Code, as adopted and amended by the local jurisdiction

G. IBC, International Building Code as adopted and amended by the local jurisdiction

1.2 SUMMARY

A. Section Includes:

1. Integrated audio and visual equipment and systems, including control equipment and systems, cabling, mounting, furniture and appurtenances.

1.3 EQUIPMENT PROVISION

A. Audiovisual system equipment shall be assumed to be furnished by Owner and installed by Contractor unless noted otherwise in project documents.

B. Audiovisual system cabling and appurtenances shall be assumed to be furnished and installed by Contractor unless noted otherwise in project documents.

C. Workmanship and equipment shall adhere to the latest referenced codes and standards of the following organizations:

1. American National Standards Institute
2. National Electrical Manufacturer’s Association
3. National Fire Protection Association
4. Underwriter’s Laboratories

1.4 QUALIFICATIONS

A. The Contractor responsible for the work of this section shall be a factory-authorized dealer, where applicable, for the major components specified. Explicit exceptions may be granted by the Engineer or by PSU OIT personnel; provide written request with the bid for services.

B. The Contractor responsible for the work of this section shall have at least one systems technician certified by Infocomm International as a Certified Technology Specialist – Installation OR a lead installer with at least 5 years verifiable field installation experience.

C. The Contractor responsible for the work of this section shall be licensed, bonded and insured to perform this work in the project location.

D. The Contractor responsible for the work of this section shall be factory certified for the programming of installed equipment, including control systems, DSPs, encoders, decoders, etc. The Owner will be responsible for system programming unless otherwise noted in the project documents.

1.5 ACTION SUBMITTALS

A. Contractor Qualifications:

1. For projects following a design-build format, where the Contractor is submitting a bid directly to the Owner, and not bidding based on an Architect/Engineer designed bid package, provide the following qualifications with bid package:

   a. Personnel: Submit project team resumes project manager, foreman, and lead on-site technician. List Infocomm or other applicable certifications for each.
   b. Project Experience: Submit a description of a minimum of three (3) project references of similar size and scope.

2. For projects following a design-bid-build format, where the Contractor is submitting a bid based on an Architect/Engineer designed bid package, provide the following qualifications with product data submittals if awarded the bid:

   a. Project Experience: Submit a description of a minimum of three (3) project references of similar size and scope.

B. Product datasheets of specific equipment that will be installed in the system. Where product datasheets show multiple items, options, or accessories, indicate on the datasheet the particular item/options/accessories that will be provided, and if the products are Owner-Furnished Owner Installed (OFOI), Owner-Furnished Contractor Installed (OFCI), or Contractor-Furnished Contractor Installed (CFCI). The intent of the requirement for Contractor to submit product data for

items furnished by Owner are to allow for review that Contractor clearly understands the delineation of scope for procurement.

C. Shop Drawings:

1. Provide audiovisual system block diagrams showing all equipment and detailed connections between components. Include designators/proposed labeling for equipment and cabling runs to correspond with those in floorplans.
2. Provide floorplans with equipment, cabling, and pathways. Indicate cabling quantities and types and pathway quantities and sizes.
3. Provide layouts/elevations of audiovisual equipment racks
4. Where indicated in a request-for-proposal (RFP), invitation-to-bid (ITB), or elsewhere in the project documents, that the Contractor's scope will include system programming, provide drawings of all touchscreen/user interface pages and popups, indicating functionality of all buttons and logical links between pages/popups.
    a. Provide overview/flowchart for the proposed layout and architecture of the control interface.
    b. Provide annotated screenshots of all proposed pages, indicating functions for each button.
    c. Indicate which pages are accessible to general users and which are accessible only to technicians/authorized users. Provide a description of system behavior during standby, startup, and shutdown.
5. Refer to System Performance Criteria in Part 3 of this specification for additional requirements.

1.6 CLOSEOUT SUBMITTALS

A. Operation and Maintenance Data - Provide operation and maintenance manual. Manual shall include job name, completion date, and names and contact information of Owner, Architect, Engineer, and Contractor. Operation and Maintenance manual shall include

1. System operation instructions for the installed system
2. Product datasheet submittal material
3. Manufacturer's operation manuals for installed equipment
4. System block diagrams
5. Schedule of manufacturer, model and serial numbers for audiovisual system equipment
6. List of consumable parts and contact information for ordering spares

7. System verification test reports
8. Video recording of Owner training session(s) – for specialty systems only.
9. Custom code created for the project, in uncompiled and editable format if programming is provided under the Contractor's scope, and not by Owner.
10. Warranty information, including warranty contract and contact information for engaging warranty service from the Contractor responsible for the work of this section, and manufacturer warranty information for installed equipment.

B. Provide PDF set of As-Built drawings showing final locations of equipment, cabling, and cable pathways. Include 1 set with the operation and maintenance data submittal for handover to Owner. 1 set shall become project record drawings for the work of this section.

1.7 SYSTEM DESCRIPTION

A. Responsibilities of this section include

1. Provision of complete and working systems as described in the project documents and drawings.
2. Complete integration with systems, architectural features and equipment provided by others.
3. Complete integration with Owner's existing AV systems and facility management software.
4. Generation of submittals and documentation as described in the project documents and drawings.
5. Provision and on-site installation of subject systems, including equipment, cabling, furniture, interfaces, infrastructure and appurtenances as required to deliver a complete system.
6. Coordination with Owner for staging, cleaning, refurbishment and delivery of Owner furnished equipment.
7. Coordination with general Contractor, Owner, audiovisual systems consultant and other disciplines.
8. Initial adjustment of the systems and provision of test equipment for system checkout and acceptance tests.
9. Training in the operation and maintenance of the systems for personnel designated by the Owner.

10. System programming where indicated in the RFP, ITB, or project documents; otherwise, programming is provided by Owner.

B. Description

1. USE: Dual Projector Classrooms will be used for standard lecture-style audio and visual presentations. A custom-made podium (with minimum 5’-6” clearance surrounding for ADA clearance) will be the primary presentation location.

2. Equipment:

a. Podium
b. Fixed PC
c. Wired auxiliary input
d. Document Camera
e. Optical Disc Player
f. Confidence Monitor
g. Audio and video processing, routing and amplification equipment
h. Control System Processor
i. Digital projectors
j. Loudspeakers

1.8 COORDINATION WITH OTHER TRADES

A. Electrical, Lighting, Telecommunication

1. Where audiovisual displays (projection screens, flat panel displays, etc) are present, coordinate with lighting designer to provide additional switch zone for lights near display to minimize ambient light at display surface

2. Coordinate with division 26 to provide dedicated 20A circuits at flat panel display, projector, and podium locations.

3. Coordinate with division 27 to provide necessary data and POE drops at audiovisual equipment locations. Refer to audiovisual system block diagrams for quantity, and provide at a minimum:

a. Podium location: 6 jacks
b. Flat panel display locations: 2 jacks

B. Multiple Disciplines

1. Where audiovisual displays (projection screens, flat panel displays, etc) are present, coordinate with other trades to ensure sightlines and projection path(s) are free from ob-

struction, including architectural features, pendant light fixtures, fire sprinklers, wireless access points, etc.

2. Where projection screens and microphones are present, coordinate locations with HVAC diffusers to minimize acoustic interference and physical movement.

PART 2 - PRODUCTS

2.1 MANUFACTURERS AND EQUIPMENT

A. Provide equipment as listed in the audiovisual equipment schedules.

B. Materials and equipment installed under the work of this section must be produced by manufacturers with a minimum of 5 years' experience, and whose product literature demonstrates compliance with this section and the referenced codes and standards.

C. Manufacturers and model numbers indicated in this specification, the audiovisual equipment schedules, diagrams or elsewhere in the project documents represent PSU standard equipment. Substitutions will not be accepted without written documentation from PSU OIT personnel.

D. Materials and equipment provided shall be new and meet or exceed performance requirements of those listed in the audiovisual equipment schedules.

E. In the event that specified material or equipment has reached end of life at the time of procurement, Contractor shall seek direction from PSU OIT, Engineer, or Architect.

F. Equipment must be UL listed.

G. Unless otherwise noted, equipment accessories shall be manufactured by the manufacturer of the equipment that they accessorize.

H. Equipment substitutions must be requested in accordance with Division 01 and will be evaluated against Owner standards, performance, reliability, functionality, and in some cases, aesthetics. Substitution requests shall include justification for the proposed substitution.

I. Where Owner furnished and/or existing equipment is being used in the installation, Contractor is responsible for cleaning, accessorizing, replacing consumable parts with new, and testing said equipment prior to installation.

2.2 MOUNTING EQUIPMENT

A. Install mounting hardware as required for a finished installation of all equipment, including speakers, projectors, flat panel displays, rack-mounted equipment, control panels, and others.

Where mounting hardware is not scheduled, it is nonetheless assumed to be included in the bid documents. Install accessories for equipment racks as required for a complete installation, including power distribution and covers.

B. Provide physical security measures for all audiovisual equipment in classrooms, including security mounts, screws, locking clamps, podiums, and drawers, retractable cables for wireless remote controls and audible alarms.

2.3 PROJECTION SCREENS

A. Projection screens shall:

1. Have 16:10 aspect ratio
2. Have controlled screen return for image width <120”
3. Be electrically raised/lowered for image width ≥120”

B. Sizing

1. Minimum projection screen image width shall be 96”
2. Projection screen images shall be sized such that the image height is greater than or equal to the distance to the least favored viewer divided by 5, except where limited by room architecture. If room architecture limits projection screen size, coordinate with PSU OIT-ITS, architect or engineer for direction.
3. Bottom of projected image shall be no lower than 42” above finished floor

2.4 WIRING AND CABLE

A. Provide wiring and cable from the following manufacturers, as appropriate for the installation

ID	CABLE TYPE	MANUFACTURER	MODEL
70V	70V Speaker Wire	LIBERTY	20-2C-TTPSH
8Ω	8Ω	LIBERTY	1x-2C
COMP	Composite Video	LIBERTY	RG59-CCTV
DP	Display Port	LIBERTY	E-DPM
HDBT	HD BaseT	COVIDE	P-C6F-BLU
HDMI	High Definition Multimedia Inter-	LIBERTY	HDPMM
LA	Line Level Audio	LIBERTY	20-2C-SH
MIC	Microphone Level Audio	LIBERTY / GEPCO	MP1201
NET	Network Cable	LIBERTY	24-4P-L6
POE	Power Over Ethernet Network	LIBERTY	24-4P-L6
RGBHV	Red/Green/Blue/Horiz/Vert	LIBERTY	RGB5C-25-CMP

INTEGRATED AUDIOVISUAL SYSTEMS AND EQUIPMENT FOR CLASSROOMS

(DUAL PROJECTOR)

ID	CABLE TYPE	MANUFACTURER	MODEL
RS	RS232	LIBERTY	24-2P-485
SA	Stereo Line Level Audio	LIBERTY	22-2P-INDSH
USB	Universal Serial Bus	LIBERTY	E-USB3x

PART 3 - EXECUTION

3.1 COORDINATION

A. Interface and coordinate the work of this section with that of other trades and examine drawings and specifications of other trades including mechanical, electrical, telecommunications, architectural, and structural for construction details and coordination.

B. Confirm exact installation location of all devices with Owner / Architect / interior designer prior to rough-in, including, but not limited to equipment installed in front of house spaces, equipment installed in custom assemblies, and equipment installed or routed through millwork / casework.

C. Coordinate layout and installation of system components and suspension system with other construction that penetrates ceilings or is supported by them, including, but not limited to, light fixtures, HVAC equipment, fire-suppression system, and partition assemblies. This includes coordination to confirm moving objects have a clear path of travel and confirmation that projected image paths are clear from obstruction.

D. Coordinate with architectural and structural to reinforce walls where audiovisual equipment is scheduled for mounting. Design for actual equipment weight with a 2x safety factor, minimum 100 lbs. Coordinate these reinforcements with division 26 and 27 and PSU OIT-ITS and facilities to ensure power and data services are accounted for.

3.2 NETWORKING

A. Where Owner provided active and passive networking equipment is used as a part of the audiovisual installation, coordinate with Owner's representatives to ensure said networking equipment meets or exceeds specifications and is configured as required by the manufacturers of the audiovisual equipment that will reside on the network.

B. Coordinate with data/telecom Contractor to combine pathways for networking and low-voltage category cabling where allowable.

3.3 CUSTOM SOFTWARE / USER INTERFACE

A. Where indicated in the RFP, ITB, or elsewhere in the project documents, that the Contractor's scope will include system programming, adhere to the following requirements:

1. Provide a unified User Interface (UI) throughout the project with consistent design language throughout.
2. The UI should be consistent for all systems, even where different touch panel models are used.
3. Provide color printouts of all UI pages and popups for review. Coordinate with owner for audiovisual control system user interfaces, including owner's branding as required, and obtaining final approval from owner for control system UI screens. Approval shall be by signed affidavit.

3.4 INSTALLATION OF RACEWAYS

A. Coordinate raceways with Electrical Contractor (EC) prior to rough-in. This includes providing detailed conduit, box, and raceways requirements to EC with sufficient time for procurement of materials, coordination with other trades, etc. with no delay in the overall construction schedule.

B. Power, signal and control wiring for audiovisual systems shall each be routed in dedicated conduits, unless otherwise noted.

C. Where conduit pathways are installed with spare capacity, provide pullstring to aid in future cable installation.

D. Where spare conduit pathways are provided, provide pullstring or mule tape to aid in future cable installation.

E. Label each end of conduit to indicate location of other end.

F. Classrooms

1. Provide wallbox at front corner of room near teaching station, maximum 3'-0" from corner. Provide pathways to wallbox:
   a. (1) 1" conduit for audio and video cables to flat panel display / projector location
   b. (1) ¾" conduit stub to ceiling space for speaker level audio cabling. Where ceilings are open to structure, or in other cases where speaker cable runs are visible, provide ¾" conduit pathways for entirety of cable run.

c. (1) ¾" conduit from branch panel for line voltage
d. (1) 1" conduit from IDF for network cabling

2. Provide wall boxes for flat panel displays. Provide pathways to wall box:

a. (1) 2" conduit to teaching station wallbox
b. (1) ¾" conduit for line voltage
c. (1) 1" conduit for network cabling

3. Provide ceiling boxes for projectors. Provide pathways to ceiling box:

a. (1) 2" conduit to teaching station wallbox
b. (1) ¾" conduit for line voltage
c. (1) 1" conduit for network cabling

3.5 WIRING METHODS

A. Wiring Method: Unless otherwise noted, in "front of house" spaces, wire and cable pathways shall be concealed in accessible ceilings, walls, and floor. Reference drawing details, if provided in the project documents, and coordinate with Architect to ensure desired aesthetic is maintained. Wire and cable to be supported independently of other systems or work by other trades, in a means acceptable to NEC requirements.

B. Wiring within Enclosures: Bundle, lace, and train cables to terminal points with only the necessary excess and without exceeding manufacturer's limitations on bending radii. Provide proper cable slack and management within slide-out and rotating racks to allow for maintenance access while system is still operational, without damaging cables. Where possible, use hook-and-loop type cable ties, not zip-ties.

C. Use hard plastic spiral wrap for cable bundles from wall or floor outlets to podium/lecterns, conference room table pop-up boxes, etc. or anywhere cabling is exposed to potential damage by end-users. Cloth mesh type cable wrap is not accessible.

3.6 INSTALLATION OF CABLES

A. General Cable Installation Requirements:

1. Terminate conductors; no cable shall contain un-terminated elements. Make terminations only at outlets and terminals.

2. Secure and support cables at intervals not exceeding 30 inches and not more than 6 inches from cabinets, boxes, fittings, outlets, racks, and terminals. Wire and cable to be

supported independently of other systems or work by other trades, in a means acceptable to NEC requirements.

3. Do not install bruised, kinked, scored, deformed, or abraded cable. Do not splice cable between termination, tap, or junction points. Remove and discard cable if damaged during installation and replace it with new cable.

4. Maintain maximum separation from line voltage conductors. Where line voltage conductors must cross signal cabling, cross at right angles.

B. Cable Labeling: Affix permanent machine printed labels to all cables in the audiovisual system, including power cables. Barcode labels are acceptable, but must also be accompanied by a text label readable without machine assistance. Text height shall be minimum 2.5mm, and label shall be within 1-12 inches of termination, the end of unterminated cable, or the exit of cable jacketing or strain-relief. Cable labeling shall correspond with cable schedule and shop drawings. Label cabling in accordance with Infocomm F501.01:2015

3.7 WIRELESS SYSTEMS

A. Confirm frequency range of specified wireless systems and equipment is appropriate for local regulations and is free from interference. Coordinate licensing for wireless systems as required.

B. Where multiple wireless systems are present, coordinate frequency ranges to prevent interference between systems.

C. Provide remote antenna(s), mounting, cabling and appurtenances as required for wireless transmitters/receivers as needed to ensure wireless system performance is free from dropouts, bad reception, static, and interference.

3.8 INSTALLATION

A. Equipment shall be mounted firmly in place with permanent hardware adequate to support the equipment with a 3x weight multiplier safety factor. Fixed equipment shall be braced for seismic activity as required by the local jurisdiction.

B. Wall-Mounted Outlets: Flush mounted unless otherwise noted in project documents. Where installing flush-mounted outlets is not possible, seek approval for surface-mounted devices from Architect, Engineer, or PSU OIT personnel.

C. Finishes: Coordinate finishes with Architect for exposed equipment, including speakers, wallplates, etc.

D. Provide accessories, backboxes, pathways, mounting hardware, decorative trim, escutcheons cabling, and ancillary equipment to provide a complete and functioning system as outlined in these specifications and project drawings.

3.9 SYSTEM PERFORMANCE CRITERIA

A. Perform tests and measurements in accordance with AV9000:2011 Quality Management System for the Audio Visual Technology Industry and ANSI/Infocomm 10:2013, AV Systems Performance Verification to ensure adequate system performance.

B. Measure and document system performance against the following minimum criteria. Where system performance criteria are not met, take corrective action as required to bring system performance into compliance with criteria listed here and in the referenced performance documents. Where criteria listed below and those in the referenced performance documents are in disagreement, the more stringent are in effect. Where criteria listed below and those in the reference performance documents cannot be met by no fault of the Contractor, Contractor to indicate this along with shop drawing submittals.

1. Audio

   a. Head room level: 10 dB
   b. Audio electrical SNR: ≥60 dB
   c. Audio system output level variance: ≤±1 dB
   d. Program audio signal sources should be balanced at the input stage to generate a level variance not to exceed ±1 dB
   e. The system under test shall produce a flat frequency response (+/-0.5dB) from 20 Hz to 20 kHz.
   f. Speech Transmission Index: ≥0.66
   g. Audio power amplifier channels shall not be loaded beyond their rated capacity
   h. Voice reinforcement shall be stable. No audible feedback is acceptable.
   i. Balance/adjust audio and videoconferencing microphone gains and lobes such that standard voices (60dB, 1m) at each seated conferencing position produce a signal level variance of ≤±3 dB.
   j. Audio only system latency: ≤2 ms.
   k. Total Harmonic Distortion: <1%
   l. Acoustic echo cancellation: no perceptible echo (>55dB cancellation)

2. Video

   a. Display resolution: minimum 1080p compatible
   b. Camera resolution: 1080p compatible

c. Digital displays shall be free from artifacts and faithfully display program content.
d. Confirm optimal brightness, contrast and color in displays using SMPTE source
e. Where multiple displays are visible in the same area, demonstrate color consistency throughout, where applicable.
f. Verify that displayed images are free from visible distortion
g. 0 pixel failures per display
h. Confirm even illumination across displays. No location shall be measured to be greater than +10% or -5% the average illumination.
i. Test all digital video signal chains to ensure HDCP is carried through, enabling display of protected content at all locations, U.O.N.
j. Audio/video system latency (lip sync) shall not exceed +20 ms/-40ms

3. Control, Power, Compatibility, Other

a. Ensure system components are powered up and down in sequence. Audio power amplifiers shall power up last and power down first. Control processors should never power down.
b. Ensure manufacturer's recommended cable bend radii are not exceeded.
c. Demonstrate audio and video teleconferencing compatibility with all anticipated far-end soft codecs, including, at a minimum, Google Hangouts, Skype, and Zoom.
d. Ensure control system performs listed functions as indicated and described in the contract documents while remaining synced with audiovisual system components and external system hardware and software

3.10 STARTUP SERVICE

A. Schedule: Inform PSU OIT personnel a minimum of two weeks prior to anticipated completion of system installation, so that Owner has sufficient time to schedule programming effort. This schedule shall also include a minimum three-week period for system adjustments, troubleshooting, etc. before the project's scheduled completion.

B. Perform startup service:

1. Verify that electrical wiring installation complies with manufacturer's submittal and installation requirements.

2. Complete installation and startup checks according to manufacturer's written instructions.

3. Conduct system verification tests to ensure system performs as intended. Reference "Infocomm Audiovisual Systems Performance Verification Checklist," available at

http://www.infocomm.org/cps/rde/xbcr/infocomm/CAVSP_Checklist.pdf. Indicate PASS/FAIL/NOT APPLICABLE for listed criteria and include as System Verification Test Report in Operation and Maintenance submittal. Reference section 1.

3.11 ACCEPTANCE TESTING

A. At completion of startup service and acceptance of system verification test report, schedule site visit with Engineer.

1. Make available to the Engineer the following during acceptance testing

a. Final 'as-built' drawings, shop drawings, floor plans, block diagrams, and equipment manufacturer's operation/setup manuals
b. Source and measurement media/equipment to demonstrate all functions of audiovisual systems
c. Contractor to make adjustments as determined necessary by the Engineer, including physically re-mounting/re-aligning equipment, adjusting gain, equalization, control system GUI, etc.

2. Acceptance testing can be combined with punchlist site visit.

3. Failed acceptance tests requiring rework which cannot be completed during the scheduled acceptance test visit will be grounds for non-acceptance and will require additional acceptance testing at a future date to demonstrate compliance with the project documents.

4. Additional site visits due to acceptance test failures will be the financial responsibility of the Contractor, including hourly billable rate for Engineer, actual travel costs and related expenses.

3.12 WARRANTY

A. Include all provisions of the standard manufacturer-backed warranty for each piece of equipment. Provisions shall remain in effect for a period as stated by the manufacturer. Contractor shall be an authorized service representative for all equipment supplied as part of this project unless appropriate written approval from owner has been granted prior to equipment procurement or installation. The warranty shall also cover the accuracy of technical documentation, and signal quality as specified and documented during the testing process of this project.

B. Contractor to guarantee all work installed under this specification. Make good, repair or replace, at the Contractor's own expense, any defective work, materials or parts which may show themselves within three years after final acceptance, if in the opinion of the Architect or Engineer said defect is due to imperfection in material, design, or workmanship.

C. Provide, as an itemized option, the ability to extend the terms of the warranty described above for one additional year.

3.13 ADJUSTING

A. On-Site Assistance: Engage a factory-authorized service representative to provide on-site assistance in adjusting sound levels, resetting transformer taps, and adjusting controls to meet occupancy conditions.

B. Occupancy Adjustments: When requested within 6 months of date of Substantial Completion, provide on-site assistance in adjusting system to suit actual occupied conditions. Provide up to two visits to Project during other-than-normal occupancy hours for this purpose.

3.14 DEMONSTRATION

A. Train Owner's maintenance personnel to adjust, operate, and maintain the Integrated Audio-Video Systems and Equipment. Provide video recording of this training and include in Operations and Maintenance manual on USB flash drive format.

END OF SECTION

\\PDXDATA1\Jobs\2018\02.18.00825 PSU Campus Audiovisual Standards\Drawings\AutoCAD\AV300 - Digital Signage.dwg, 6/22/2018 1:43:21 PM, Bluebeam PDF

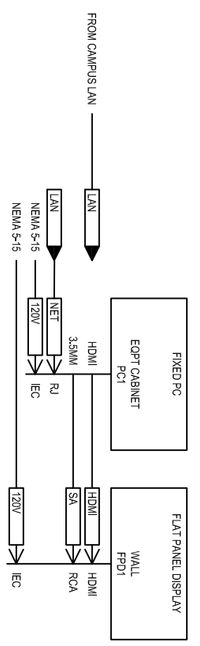

Portland State UNIVERSITY

DWG. TITLE:	AUDIOVISUAL SYSTEM BLOCK DIAGRAM	DATE:	2018–06–22
	DIGITAL SIGNAGE DISPLAYS	REF:	
REVISION:	003	SCALE:	N.T.S.
PROJECT:	PORTLAND STATE UNIV. AV STANDARDS UPDATES	DWG. NO:	**AV300**

INTEGRATED AUDIOVISUAL SYSTEMS AND EQUIPMENT FOR CLASSROOMS

(LECTURE CAPTURE)

PART 1 - GENERAL

1.1 RELATED DOCUMENTS

A. Drawings and general provisions of the Contract, including General and Supplementary Conditions and Division 01 Specification Sections, apply to this Section.

B. ANSI/Infocomm 1M-2009, Audio Coverage Uniformity in Enclosed Listener Areas

C. ANSI/Infocomm 10: 2013, AV Systems Performance Verification 89

D. ANSI/Infocomm 3M-2011, Projected Image Contrast Ratio

E. Infocomm F501-01:2015, Cable Labeling for Audiovisual Systems

F. NFPA 70, National Electrical Code, as adopted and amended by the local jurisdiction

G. IBC, International Building Code as adopted and amended by the local jurisdiction

1.2 SUMMARY

A. Section Includes:

1. Integrated audio and visual equipment and systems, including control equipment and systems, cabling, mounting, furniture and appurtenances.

1.3 EQUIPMENT PROVISION

A. Audiovisual system equipment shall be assumed to be furnished by Owner and installed by Contractor unless noted otherwise in project documents.

B. Audiovisual system cabling and appurtenances shall be assumed to be furnished and installed by Contractor unless noted otherwise in project documents.

C. Workmanship and equipment shall adhere to the latest referenced codes and standards of the following organizations:

1. American National Standards Institute
2. National Electrical Manufacturer’s Association
3. National Fire Protection Association
4. Underwriter’s Laboratories

1.4 QUALIFICATIONS

A. The Contractor responsible for the work of this section shall be a factory-authorized dealer, where applicable, for the major components specified. Explicit exceptions may be granted by the Engineer or by PSU OIT personnel; provide written request with the bid for services.

B. The Contractor responsible for the work of this section shall have at least one systems technician certified by Infocomm International as a Certified Technology Specialist – Installation OR a lead installer with at least 5 years verifiable field installation experience.

C. The Contractor responsible for the work of this section shall be licensed, bonded and insured to perform this work in the project location.

D. The Contractor responsible for the work of this section shall be factory certified for the programming of installed equipment, including control systems, DSPs, encoders, decoders, etc. The Owner will be responsible for system programming unless otherwise noted in the project documents.

1.5 ACTION SUBMITTALS

A. Contractor Qualifications:

1. For projects following a design-build format, where the Contractor is submitting a bid directly to the Owner, and not bidding based on an Architect/Engineer designed bid package, provide the following qualifications with bid package:

   a. Personnel: Submit project team resumes project manager, foreman, and lead on-site technician. List Infocomm or other applicable certifications for each.
   b. Project Experience: Submit a description of a minimum of three (3) project references of similar size and scope.

2. For projects following a design-bid-build format, where the Contractor is submitting a bid based on an Architect/Engineer designed bid package, provide the following qualifications with product data submittals if awarded the bid:

   a. Project Experience: Submit a description of a minimum of three (3) project references of similar size and scope.

B. Product datasheets of specific equipment that will be installed in the system. Where product datasheets show multiple items, options, or accessories, indicate on the datasheet the particular item/options/accessories that will be provided, and if the products are Owner-Furnished Owner Installed (OFOI), Owner-Furnished Contractor Installed (OFCI), or Contractor-Furnished Contractor Installed (CFCI). The intent of the requirement for Contractor to submit product data for

items furnished by Owner are to allow for review that Contractor clearly understands the delineation of scope for procurement.

C. Shop Drawings:

1. Provide audiovisual system block diagrams showing all equipment and detailed connections between components. Include designators/proposed labeling for equipment and cabling runs to correspond with those in floorplans.
2. Provide floorplans with equipment, cabling, and pathways. Indicate cabling quantities and types and pathway quantities and sizes.
3. Provide layouts/elevations of audiovisual equipment racks
4. Where indicated in a request-for-proposal (RFP), invitation-to-bid (ITB), or elsewhere in the project documents, that the Contractor's scope will include system programming, provide drawings of all touchscreen/user interface pages and popups, indicating functionality of all buttons and logical links between pages/popups.
    a. Provide overview/flowchart for the proposed layout and architecture of the control interface.
    b. Provide annotated screenshots of all proposed pages, indicating functions for each button.
    c. Indicate which pages are accessible to general users and which are accessible only to technicians/authorized users. Provide a description of system behavior during standby, startup, and shutdown.
5. Refer to System Performance Criteria in Part 3 of this specification for additional requirements.

1.6 CLOSEOUT SUBMITTALS

A. Operation and Maintenance Data - Provide operation and maintenance manual. Manual shall include job name, completion date, and names and contact information of Owner, Architect, Engineer, and Contractor. Operation and Maintenance manual shall include

1. System operation instructions for the installed system
2. Product datasheet submittal material
3. Manufacturer's operation manuals for installed equipment
4. System block diagrams
5. Schedule of manufacturer, model and serial numbers for audiovisual system equipment
6. List of consumable parts and contact information for ordering spares

7. System verification test reports
8. Video recording of Owner training session(s) – for specialty systems only.
9. Custom code created for the project, in uncompiled and editable format if programming is provided under the Contractor's scope, and not by Owner.
10. Warranty information, including warranty contract and contact information for engaging warranty service from the Contractor responsible for the work of this section, and manufacturer warranty information for installed equipment.

B. Provide PDF set of As-Built drawings showing final locations of equipment, cabling, and cable pathways. Include 1 set with the operation and maintenance data submittal for handover to Owner. 1 set shall become project record drawings for the work of this section.

1.7 SYSTEM DESCRIPTION

A. Responsibilities of this section include

1. Provision of complete and working systems as described in the project documents and drawings.
2. Complete integration with systems, architectural features and equipment provided by others.
3. Complete integration with Owner's existing AV systems and facility management software.
4. Generation of submittals and documentation as described in the project documents and drawings.
5. Provision and on-site installation of subject systems, including equipment, cabling, furniture, interfaces, infrastructure and appurtenances as required to deliver a complete system.
6. Coordination with Owner for staging, cleaning, refurbishment and delivery of Owner furnished equipment.
7. Coordination with general Contractor, Owner, audiovisual systems consultant and other disciplines.
8. Initial adjustment of the systems and provision of test equipment for system checkout and acceptance tests.
9. Training in the operation and maintenance of the systems for personnel designated by the Owner.

10. System programming where indicated in the RFP, ITB, or project documents; otherwise, programming is provided by Owner.

B. Functional Description

1. USE: Lecture Capture Classrooms will be used for lecture-style audio and visual presentations. A custom-made podium (with minimum 5'-6" clearance surrounding for ADA clearance) will be the primary presentation location. Audio, video and digital content from the presentations will be captured and made available for real-time and archival viewing. Lecture capture classrooms will contain a control room with production camera controller and monitors.

2. Equipment:

a. Podium
b. Fixed PC
c. Wired auxiliary input
d. Document Camera
e. Optical Disc Player
f. Confidence Monitors
g. Wireless and ceiling mounted microphones
h. PTZ cameras
i. Production camera controller
j. Audio and video processing, routing, amplification and streaming equipment
k. Control System Processor
l. Digital projector
m. Loudspeakers

3.

1.8 COORDINATION WITH OTHER TRADES

A. Electrical, Lighting, Telecommunication

1. Where audiovisual displays (projection screens, flat panel displays, etc) are present, coordinate with lighting designer to provide additional switch zone for lights near display to minimize ambient light at display surface

2. Coordinate with division 26 to provide dedicated 20A circuits at flat panel display, projector, and podium locations.

3. Coordinate with division 27 to provide necessary data and POE drops at audiovisual equipment locations. Refer to audiovisual system block diagrams for quantity, and provide at a minimum:

a. Podium location: 6 jacks
b. Flat panel display locations: 2 jacks

B. Multiple Disciplines

1. Where audiovisual displays (projection screens, flat panel displays, etc) are present, coordinate with other trades to ensure sightlines and projection path(s) are free from obstruction, including architectural features, pendant light fixtures, fire sprinklers, wireless access points, etc.

2. Where projection screens and microphones are present, coordinate locations with HVAC diffusers to minimize acoustic interference and physical movement.

PART 2 - PRODUCTS

2.1 MANUFACTURERS AND EQUIPMENT

A. Provide equipment as listed in the audiovisual equipment schedules.

B. Materials and equipment installed under the work of this section must be produced by manufacturers with a minimum of 5 years' experience, and whose product literature demonstrates compliance with this section and the referenced codes and standards.

C. Manufacturers and model numbers indicated in this specification, the audiovisual equipment schedules, diagrams or elsewhere in the project documents represent PSU standard equipment. Substitutions will not be accepted without written documentation from PSU OIT personnel.

D. Materials and equipment provided shall be new and meet or exceed performance requirements of those listed in the audiovisual equipment schedules.

E. In the event that specified material or equipment has reached end of life at the time of procurement, Contractor shall seek direction from PSU OIT, Engineer, or Architect.

F. Equipment must be UL listed.

G. Unless otherwise noted, equipment accessories shall be manufactured by the manufacturer of the equipment that they accessorize.

H. Equipment substitutions must be requested in accordance with Division 01 and will be evaluated against Owner standards, performance, reliability, functionality, and in some cases, aesthetics. Substitution requests shall include justification for the proposed substitution.

I. Where Owner furnished and/or existing equipment is being used in the installation, Contractor is responsible for cleaning, accessorizing, replacing consumable parts with new, and testing said equipment prior to installation.

2.2 MOUNTING EQUIPMENT

A. Install mounting hardware as required for a finished installation of all equipment, including speakers, projectors, flat panel displays, rack-mounted equipment, control panels, and others. Where mounting hardware is not scheduled, it is nonetheless assumed to be included in the bid documents. Install accessories for equipment racks as required for a complete installation, including power distribution and covers.

B. Provide physical security measures for all audiovisual equipment in classrooms, including security mounts, screws, locking clamps, podiums, and drawers, retractable cables for wireless remote controls and audible alarms.

2.3 PROJECTION SCREENS

A. Projection screens shall:

1. Have 16:10 aspect ratio
2. Have controlled screen return for image width <120”
3. Be electrically raised/lowered for image width ≥120”

B. Sizing

1. Minimum projection screen image width shall be 96”
2. Projection screen images shall be sized such that the image height is greater than or equal to the distance to the least favored viewer divided by 5, except where limited by room architecture. If room architecture limits projection screen size, coordinate with PSU OIT-ITS, architect or engineer for direction.
3. Bottom of projected image shall be no lower than 42” above finished floor

2.4 WIRING AND CABLE

A. Provide wiring and cable from the following manufacturers, as appropriate for the installation

ID	CABLE TYPE	MANUFACTURER	MODEL
70V	70V Speaker Wire	LIBERTY	20-2C-TTPSH
8Ω	8Ω	LIBERTY	1x-2C
COMP	Composite Video	LIBERTY	RG59-CCTV

ID	CABLE TYPE	MANUFACTURER	MODEL
DP	Display Port	LIBERTY	E-DPM
HDBT	HD BaseT	COVIDE	P-C6F-BLU
HDMI	High Definition Multimedia Inter-	LIBERTY	HDPMM
LA	Line Level Audio	LIBERTY	20-2C-SH
MIC	Microphone Level Audio	LIBERTY / GEPCO	MP1201
NET	Network Cable	LIBERTY	24-4P-L6
POE	Power Over Ethernet Network	LIBERTY	24-4P-L6
RGBHV	Red/Green/Blue/Horiz/Vert	LIBERTY	RGB5C-25-CMP
RS	RS232	LIBERTY	24-2P-485
SA	Stereo Line Level Audio	LIBERTY	22-2P-INDSH
USB	Universal Serial Bus	LIBERTY	E-USB3x

PART 3 - EXECUTION

3.1 COORDINATION

A. Interface and coordinate the work of this section with that of other trades and examine drawings and specifications of other trades including mechanical, electrical, telecommunications, architectural, and structural for construction details and coordination.

B. Confirm exact installation location of all devices with Owner / Architect / interior designer prior to rough-in, including, but not limited to equipment installed in front of house spaces, equipment installed in custom assemblies, and equipment installed or routed through millwork / casework.

C. Coordinate layout and installation of system components and suspension system with other construction that penetrates ceilings or is supported by them, including, but not limited to, light fixtures, HVAC equipment, fire-suppression system, and partition assemblies. This includes coordination to confirm moving objects have a clear path of travel and confirmation that projected image paths are clear from obstruction.

D. Coordinate with architectural and structural to reinforce walls where audiovisual equipment is scheduled for mounting. Design for actual equipment weight with a 2x safety factor, minimum 100 lbs. Coordinate these reinforcements with division 26 and 27 and PSU OIT-ITS and facilities to ensure power and data services are accounted for.

3.2 NETWORKING

A. Where Owner provided active and passive networking equipment is used as a part of the audiovisual installation, coordinate with Owner’s representatives to ensure said networking equip-

ment meets or exceeds specifications and is configured as required by the manufacturers of the audiovisual equipment that will reside on the network.

B. Coordinate with data/telecom Contractor to combine pathways for networking and low-voltage category cabling where allowable.

3.3 CUSTOM SOFTWARE / USER INTERFACE

A. Where indicated in the RFP, ITB, or elsewhere in the project documents, that the Contractor's scope will include system programming, adhere to the following requirements:

1. Provide a unified User Interface (UI) throughout the project with consistent design language throughout.
2. The UI should be consistent for all systems, even where different touch panel models are used.
3. Provide color printouts of all UI pages and popups for review. Coordinate with owner for audiovisual control system user interfaces, including owner's branding as required, and obtaining final approval from owner for control system UI screens. Approval shall be by signed affidavit.

3.4 INSTALLATION OF RACEWAYS

A. Coordinate raceways with Electrical Contractor (EC) prior to rough-in. This includes providing detailed conduit, box, and raceways requirements to EC with sufficient time for procurement of materials, coordination with other trades, etc. with no delay in the overall construction schedule.

B. Power, signal and control wiring for audiovisual systems shall each be routed in dedicated conduits, unless otherwise noted.

C. Where conduit pathways are installed with spare capacity, provide pullstring to aid in future cable installation.

D. Where spare conduit pathways are provided, provide pullstring or mule tape to aid in future cable installation.

E. Label each end of conduit to indicate location of other end.

F. Classrooms

1. Provide wallbox at front corner of room near teaching station, maximum 3'-0" from corner. Provide pathways to wallbox:

a. (1) 1” conduit for audio and video cables to flat panel display / projector location
b. (1) ¾” conduit stub to ceiling space for speaker level audio cabling. Where ceilings are open to structure, or in other cases where speaker cable runs are visible, provide ¾” conduit pathways for entirety of cable run.
c. (1) ¾” conduit from branch panel for line voltage
d. (1) 1” conduit from IDF for network cabling

2. Provide wall boxes for flat panel displays. Provide pathways to wall box:

a. (1) 2” conduit to teaching station wallbox
b. (1) ¾” conduit for line voltage
c. (1) 1” conduit for network cabling

3. Provide ceiling boxes for projectors. Provide pathways to ceiling box:

a. (1) 2” conduit to teaching station wallbox
b. (1) ¾” conduit for line voltage
c. (1) 1” conduit for network cabling

3.5 WIRING METHODS

A. Wiring Method: Unless otherwise noted, in “front of house” spaces, wire and cable pathways shall be concealed in accessible ceilings, walls, and floor. Reference drawing details, if provided in the project documents, and coordinate with Architect to ensure desired aesthetic is maintained. Wire and cable to be supported independently of other systems or work by other trades, in a means acceptable to NEC requirements.

B. Wiring within Enclosures: Bundle, lace, and train cables to terminal points with only the necessary excess and without exceeding manufacturer's limitations on bending radii. Provide proper cable slack and management within slide-out and rotating racks to allow for maintenance access while system is still operational, without damaging cables. Where possible, use hook-and-loop type cable ties, not zip-ties.

C. Use hard plastic spiral wrap for cable bundles from wall or floor outlets to podium/lecterns, conference room table pop-up boxes, etc. or anywhere cabling is exposed to potential damage by end-users. Cloth mesh type cable wrap is not accessible.

3.6 INSTALLATION OF CABLES

A. General Cable Installation Requirements:

1. Terminate conductors; no cable shall contain un-terminated elements. Make terminations only at outlets and terminals.
2. Secure and support cables at intervals not exceeding 30 inches and not more than 6 inches from cabinets, boxes, fittings, outlets, racks, and terminals. Wire and cable to be supported independently of other systems or work by other trades, in a means acceptable to NEC requirements.
3. Do not install bruised, kinked, scored, deformed, or abraded cable. Do not splice cable between termination, tap, or junction points. Remove and discard cable if damaged during installation and replace it with new cable.
4. Maintain maximum separation from line voltage conductors. Where line voltage conductors must cross signal cabling, cross at right angles.

B. Cable Labeling: Affix permanent machine printed labels to all cables in the audiovisual system, including power cables. Barcode labels are acceptable, but must also be accompanied by a text label readable without machine assistance. Text height shall be minimum 2.5mm, and label shall be within 1-12 inches of termination, the end of unterminated cable, or the exit of cable jacketing or strain-relief. Cable labeling shall correspond with cable schedule and shop drawings. Label cabling in accordance with Infocomm F501.01:2015

3.7 WIRELESS SYSTEMS

A. Confirm frequency range of specified wireless systems and equipment is appropriate for local regulations and is free from interference. Coordinate licensing for wireless systems as required.

B. Where multiple wireless systems are present, coordinate frequency ranges to prevent interference between systems.

C. Provide remote antenna(s), mounting, cabling and appurtenances as required for wireless transmitters/receivers as needed to ensure wireless system performance is free from dropouts, bad reception, static, and interference.

3.8 INSTALLATION

A. Equipment shall be mounted firmly in place with permanent hardware adequate to support the equipment with a 3x weight multiplier safety factor. Fixed equipment shall be braced for seismic activity as required by the local jurisdiction.

B. Wall-Mounted Outlets: Flush mounted unless otherwise noted in project documents. Where installing flush-mounted outlets is not possible, seek approval for surface-mounted devices from Architect, Engineer, or PSU OIT personnel.

C. Finishes: Coordinate finishes with Architect for exposed equipment, including speakers, wall-plates, etc.

D. Provide accessories, backboxes, pathways, mounting hardware, decorative trim, escutcheons cabling, and ancillary equipment to provide a complete and functioning system as outlined in these specifications and project drawings.

3.9 SYSTEM PERFORMANCE CRITERIA

A. Perform tests and measurements in accordance with AV9000:2011 Quality Management System for the Audio Visual Technology Industry and ANSI/Infocomm 10:2013, AV Systems Performance Verification to ensure adequate system performance.

B. Measure and document system performance against the following minimum criteria. Where system performance criteria are not met, take corrective action as required to bring system performance into compliance with criteria listed here and in the referenced performance documents. Where criteria listed below and those in the referenced performance documents are in disagreement, the more stringent are in effect. Where criteria listed below and those in the reference performance documents cannot be met by no fault of the Contractor, Contractor to indicate this along with shop drawing submittals.

1. Audio

a. Head room level: 10 dB
b. Audio electrical SNR: ≥60 dB
c. Audio system output level variance: ≤±1 dB
d. Program audio signal sources should be balanced at the input stage to generate a level variance not to exceed ±1 dB
e. The system under test shall produce a flat frequency response (+/-0.5dB) from 20 Hz to 20 kHz.
f. Speech Transmission Index: ≥0.66
g. Audio power amplifier channels shall not be loaded beyond their rated capacity
h. Voice reinforcement shall be stable. No audible feedback is acceptable.
i. Balance/adjust audio and videoconferencing microphone gains and lobes such that standard voices (60dB, 1m) at each seated conferencing position produce a signal level variance of ≤±3 dB.
j. Audio only system latency: ≤2 ms.
k. Total Harmonic Distortion: <1%
l. Acoustic echo cancellation: no perceptible echo (>55dB cancellation)

2. Video

a. Display resolution: minimum 1080p compatible
b. Camera resolution: 1080p compatible
c. Digital displays shall be free from artifacts and faithfully display program content.
d. Confirm optimal brightness, contrast and color in displays using SMPTE source
e. Where multiple displays are visible in the same area, demonstrate color consistency throughout, where applicable.
f. Verify that displayed images are free from visible distortion
g. 0 pixel failures per display
h. Confirm even illumination across displays. No location shall be measured to be greater than +10% or -5% the average illumination.
i. Test all digital video signal chains to ensure HDCP is carried through, enabling display of protected content at all locations, U.O.N.
j. Audio/video system latency (lip sync) shall not exceed +20 ms/-40ms

3. Control, Power, Compatibility, Other

a. Ensure system components are powered up and down in sequence. Audio power amplifiers shall power up last and power down first. Control processors should never power down.
b. Ensure manufacturer's recommended cable bend radii are not exceeded.
c. Demonstrate audio and video teleconferencing compatibility with all anticipated far-end soft codecs, including, at a minimum, Google Hangouts, Skype, and Zoom.
d. Ensure control system performs listed functions as indicated and described in the contract documents while remaining synced with audiovisual system components and external system hardware and software

3.10 STARTUP SERVICE

A. Schedule: Inform PSU OIT personnel a minimum of two weeks prior to anticipated completion of system installation, so that Owner has sufficient time to schedule programming effort. This schedule shall also include a minimum three-week period for system adjustments, troubleshooting, etc. before the project's scheduled completion.

B. Perform startup service:

1. Verify that electrical wiring installation complies with manufacturer's submittal and installation requirements.

2. Complete installation and startup checks according to manufacturer's written instructions.

3. Conduct system verification tests to ensure system performs as intended. Reference "Infocomm Audiovisual Systems Performance Verification Checklist," available at http://www.infocomm.org/cps/rde/xbcr/infocomm/CAVSP_Checklist.pdf. Indicate PASS/FAIL/NOT APPLICABLE for listed criteria and include as System Verification Test Report in Operation and Maintenance submittal. Reference section 1.

3.11 ACCEPTANCE TESTING

A. At completion of startup service and acceptance of system verification test report, schedule site visit with Engineer.

1. Make available to the Engineer the following during acceptance testing

a. Final 'as-built' drawings, shop drawings, floor plans, block diagrams, and equipment manufacturer's operation/setup manuals
b. Source and measurement media/equipment to demonstrate all functions of audiovisual systems
c. Contractor to make adjustments as determined necessary by the Engineer, including physically re-mounting/re-aligning equipment, adjusting gain, equalization, control system GUI, etc.

2. Acceptance testing can be combined with punchlist site visit.

3. Failed acceptance tests requiring rework which cannot be completed during the scheduled acceptance test visit will be grounds for non-acceptance and will require additional acceptance testing at a future date to demonstrate compliance with the project documents.

4. Additional site visits due to acceptance test failures will be the financial responsibility of the Contractor, including hourly billable rate for Engineer, actual travel costs and related expenses.

3.12 WARRANTY

A. Include all provisions of the standard manufacturer-backed warranty for each piece of equipment. Provisions shall remain in effect for a period as stated by the manufacturer. Contractor shall be an authorized service representative for all equipment supplied as part of this project unless appropriate written approval from owner has been granted prior to equipment procurement or installation. The warranty shall also cover the accuracy of technical documentation, and signal quality as specified and documented during the testing process of this project.

B. Contractor to guarantee all work installed under this specification. Make good, repair or replace, at the Contractor's own expense, any defective work, materials or parts which may show

themselves within three years after final acceptance, if in the opinion of the Architect or Engineer said defect is due to imperfection in material, design, or workmanship.

C. Provide, as an itemized option, the ability to extend the terms of the warranty described above for one additional year.

3.13 ADJUSTING

A. On-Site Assistance: Engage a factory-authorized service representative to provide on-site assistance in adjusting sound levels, resetting transformer taps, and adjusting controls to meet occupancy conditions.

B. Occupancy Adjustments: When requested within 6 months of date of Substantial Completion, provide on-site assistance in adjusting system to suit actual occupied conditions. Provide up to two visits to Project during other-than-normal occupancy hours for this purpose.

3.14 DEMONSTRATION

A. Train Owner's maintenance personnel to adjust, operate, and maintain the Integrated Audio-Video Systems and Equipment. Provide video recording of this training and include in Operations and Maintenance manual on USB flash drive format.

END OF SECTION

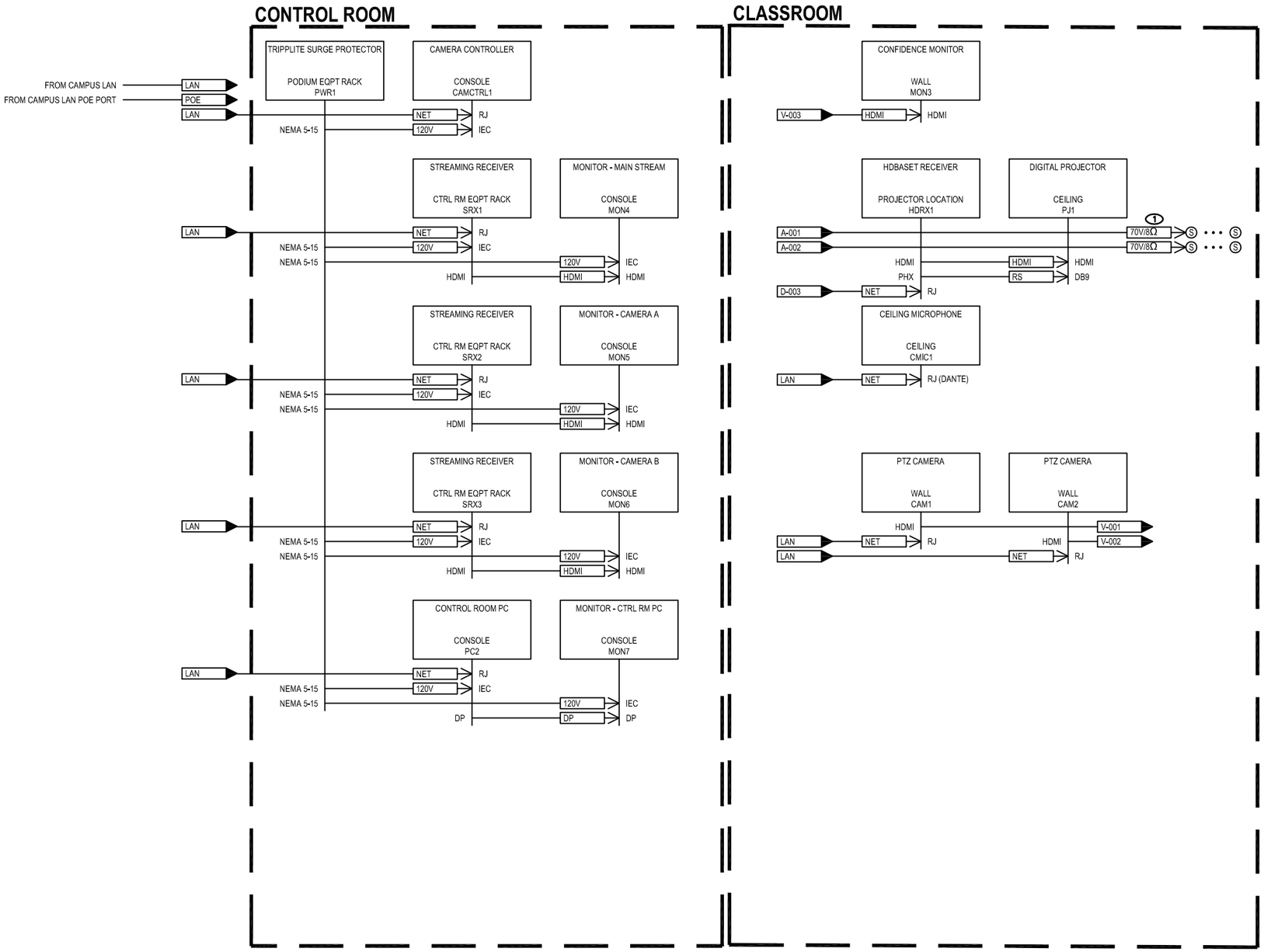

KEYED NOTES (#)

1. PROVIDE 8 OHM OR 70V SPEAKERS AND CABLING AS REQUIRED BY SYSTEM.

DWG. TITLE: AUDIOVISUAL SYSTEM BLOCK DIAGRAM
CLASSROOM – LECTURE CAPTURE (1 OF 2)
REVISION: 003
PROJECT: PORTLAND STATE UNIV. AV STANDARDS UPDATES

DATE: 2018–06–22
REF:
SCALE: N.T.S.
DWG. NO: **AV101**

Portland State UNIVERSITY

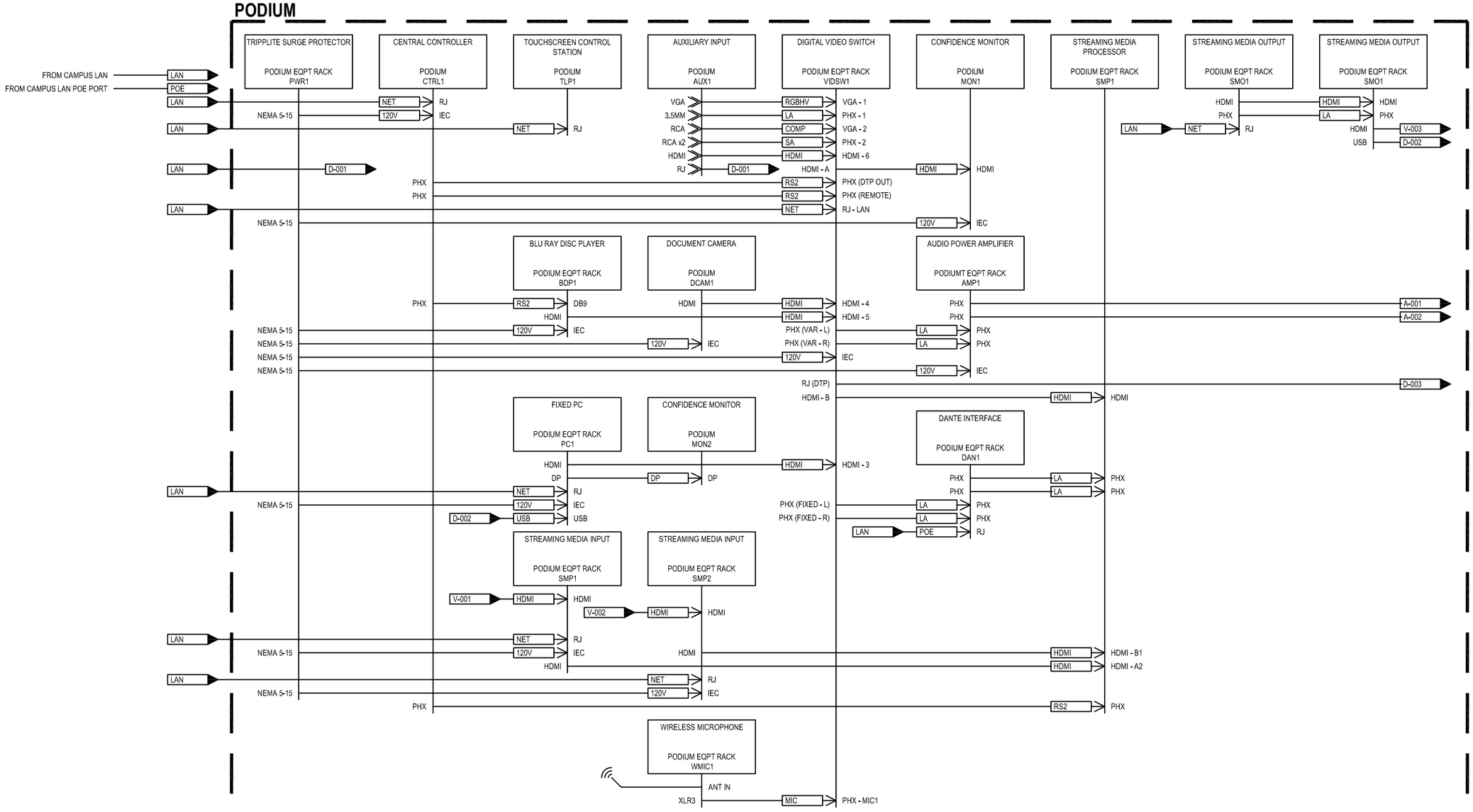

DWG. TITLE: AUDIOVISUAL SYSTEM BLOCK DIAGRAM
CLASSROOM – LECTURE CAPTURE (2 OF 2)

REVISION: 003

PROJECT: PORTLAND STATE UNIV. AV STANDARDS UPDATES

DATE: 2018-06-22

REF:

SCALE: N.T.S.

DWG. NO: **AV102**

Portland State UNIVERSITY

\\PDXDATA1\Jobs\2018\02.18.00825 PSU Campus Audiovisual Standards\Drawings\AutoCAD\AV101, AV102 - Classroom - Lecture Capture.dwg, 6/22/2018 1:31:50 PM, Bluebeam PDF

INTEGRATED AUDIOVISUAL SYSTEMS AND EQUIPMENT FOR CLASSROOMS

(OIT)

PART 1 - GENERAL

1.1 RELATED DOCUMENTS

A. Drawings and general provisions of the Contract, including General and Supplementary Conditions and Division 01 Specification Sections, apply to this Section.

B. ANSI/Infocomm 1M-2009, Audio Coverage Uniformity in Enclosed Listener Areas

C. ANSI/Infocomm 10: 2013, AV Systems Performance Verification 89

D. ANSI/Infocomm 3M-2011, Projected Image Contrast Ratio

E. Infocomm F501-01:2015, Cable Labeling for Audiovisual Systems

F. NFPA 70, National Electrical Code, as adopted and amended by the local jurisdiction

G. IBC, International Building Code as adopted and amended by the local jurisdiction

1.2 SUMMARY

A. Section Includes:

1. Integrated audio and visual equipment and systems, including control equipment and systems, cabling, mounting, furniture and appurtenances.

1.3 EQUIPMENT PROVISION

A. Audiovisual system equipment shall be assumed to be furnished by Owner and installed by Contractor unless noted otherwise in project documents.

B. Audiovisual system cabling and appurtenances shall be assumed to be furnished and installed by Contractor unless noted otherwise in project documents.

C. Workmanship and equipment shall adhere to the latest referenced codes and standards of the following organizations:

1. American National Standards Institute
2. National Electrical Manufacturer’s Association
3. National Fire Protection Association
4. Underwriter’s Laboratories

1.4 QUALIFICATIONS

A. The Contractor responsible for the work of this section shall be a factory-authorized dealer, where applicable, for the major components specified. Explicit exceptions may be granted by the Engineer or by PSU OIT personnel; provide written request with the bid for services.

B. The Contractor responsible for the work of this section shall have at least one systems technician certified by Infocomm International as a Certified Technology Specialist – Installation OR a lead installer with at least 5 years verifiable field installation experience.

C. The Contractor responsible for the work of this section shall be licensed, bonded and insured to perform this work in the project location.

D. The Contractor responsible for the work of this section shall be factory certified for the programming of installed equipment, including control systems, DSPs, encoders, decoders, etc. The Owner will be responsible for system programming unless otherwise noted in the project documents.

1.5 ACTION SUBMITTALS

A. Contractor Qualifications:

1. For projects following a design-build format, where the Contractor is submitting a bid directly to the Owner, and not bidding based on an Architect/Engineer designed bid package, provide the following qualifications with bid package:

   a. Personnel: Submit project team resumes project manager, foreman, and lead on-site technician. List Infocomm or other applicable certifications for each.
   b. Project Experience: Submit a description of a minimum of three (3) project references of similar size and scope.

2. For projects following a design-bid-build format, where the Contractor is submitting a bid based on an Architect/Engineer designed bid package, provide the following qualifications with product data submittals if awarded the bid:

   a. Project Experience: Submit a description of a minimum of three (3) project references of similar size and scope.

B. Product datasheets of specific equipment that will be installed in the system. Where product datasheets show multiple items, options, or accessories, indicate on the datasheet the particular item/options/accessories that will be provided, and if the products are Owner-Furnished Owner Installed (OFOI), Owner-Furnished Contractor Installed (OFCI), or Contractor-Furnished Contractor Installed (CFCI). The intent of the requirement for Contractor to submit product data for

items furnished by Owner are to allow for review that Contractor clearly understands the delineation of scope for procurement.

C. Shop Drawings:

1. Provide audiovisual system block diagrams showing all equipment and detailed connections between components. Include designators/proposed labeling for equipment and cabling runs to correspond with those in floorplans.
2. Provide floorplans with equipment, cabling, and pathways. Indicate cabling quantities and types and pathway quantities and sizes.
3. Provide layouts/elevations of audiovisual equipment racks
4. Where indicated in a request-for-proposal (RFP), invitation-to-bid (ITB), or elsewhere in the project documents, that the Contractor's scope will include system programming, provide drawings of all touchscreen/user interface pages and popups, indicating functionality of all buttons and logical links between pages/popups.
    a. Provide overview/flowchart for the proposed layout and architecture of the control interface.
    b. Provide annotated screenshots of all proposed pages, indicating functions for each button.
    c. Indicate which pages are accessible to general users and which are accessible only to technicians/authorized users. Provide a description of system behavior during standby, startup, and shutdown.
5. Refer to System Performance Criteria in Part 3 of this specification for additional requirements.

1.6 CLOSEOUT SUBMITTALS

A. Operation and Maintenance Data - Provide operation and maintenance manual. Manual shall include job name, completion date, and names and contact information of Owner, Architect, Engineer, and Contractor. Operation and Maintenance manual shall include

1. System operation instructions for the installed system
2. Product datasheet submittal material
3. Manufacturer's operation manuals for installed equipment
4. System block diagrams
5. Schedule of manufacturer, model and serial numbers for audiovisual system equipment
6. List of consumable parts and contact information for ordering spares

7. System verification test reports
8. Video recording of Owner training session(s) – for specialty systems only.
9. Custom code created for the project, in uncompiled and editable format if programming is provided under the Contractor's scope, and not by Owner.
10. Warranty information, including warranty contract and contact information for engaging warranty service from the Contractor responsible for the work of this section, and manufacturer warranty information for installed equipment.

B. Provide PDF set of As-Built drawings showing final locations of equipment, cabling, and cable pathways. Include 1 set with the operation and maintenance data submittal for handover to Owner. 1 set shall become project record drawings for the work of this section.

1.7 SYSTEM DESCRIPTION

A. Responsibilities of this section include

1. Provision of complete and working systems as described in the project documents and drawings.
2. Complete integration with systems, architectural features and equipment provided by others.
3. Complete integration with Owner's existing AV systems and facility management software.
4. Generation of submittals and documentation as described in the project documents and drawings.
5. Provision and on-site installation of subject systems, including equipment, cabling, furniture, interfaces, infrastructure and appurtenances as required to deliver a complete system.
6. Coordination with Owner for staging, cleaning, refurbishment and delivery of Owner furnished equipment.
7. Coordination with general Contractor, Owner, audiovisual systems consultant and other disciplines.
8. Initial adjustment of the systems and provision of test equipment for system checkout and acceptance tests.
9. Training in the operation and maintenance of the systems for personnel designated by the Owner.

10. System programming where indicated in the RFP, ITB, or project documents; otherwise, programming is provided by Owner.

B. Functional Description

1. USE: OIT Classrooms will be used for standard lecture-style audio and visual presentations. A custom-made podium (with minimum 5’-6” clearance surrounding for ADA clearance) will be the primary presentation location.

2. Equipment:

a. Podium
b. Fixed PC
c. Wired auxiliary input
d. Document Camera
e. Optical Disc Player
f. Confidence Monitor
g. Audio and video processing, routing and amplification equipment
h. Control System Processor
i. Digital projector
j. Loudspeakers

1.8 COORDINATION WITH OTHER TRADES

A. Electrical, Lighting, Telecommunication

1. Where audiovisual displays (projection screens, flat panel displays, etc) are present, coordinate with lighting designer to provide additional switch zone for lights near display to minimize ambient light at display surface

2. Coordinate with division 26 to provide dedicated 20A circuits at flat panel display, projector, and podium locations.

3. Coordinate with division 27 to provide necessary data and POE drops at audiovisual equipment locations. Refer to audiovisual system block diagrams for quantity, and provide at a minimum:

a. Podium location: 6 jacks
b. Flat panel display locations: 2 jacks

B. Multiple Disciplines

1. Where audiovisual displays (projection screens, flat panel displays, etc) are present, coordinate with other trades to ensure sightlines and projection path(s) are free from ob-

struction, including architectural features, pendant light fixtures, fire sprinklers, wireless access points, etc.

2. Where projection screens and microphones are present, coordinate locations with HVAC diffusers to minimize acoustic interference and physical movement.

PART 2 - PRODUCTS

2.1 MANUFACTURERS AND EQUIPMENT

A. Provide equipment as listed in the audiovisual equipment schedules.

B. Materials and equipment installed under the work of this section must be produced by manufacturers with a minimum of 5 years' experience, and whose product literature demonstrates compliance with this section and the referenced codes and standards.

C. Manufacturers and model numbers indicated in this specification, the audiovisual equipment schedules, diagrams or elsewhere in the project documents represent PSU standard equipment. Substitutions will not be accepted without written documentation from PSU OIT personnel.

D. Materials and equipment provided shall be new and meet or exceed performance requirements of those listed in the audiovisual equipment schedules.

E. In the event that specified material or equipment has reached end of life at the time of procurement, Contractor shall seek direction from PSU OIT, Engineer, or Architect.

F. Equipment must be UL listed.

G. Unless otherwise noted, equipment accessories shall be manufactured by the manufacturer of the equipment that they accessorize.

H. Equipment substitutions must be requested in accordance with Division 01 and will be evaluated against Owner standards, performance, reliability, functionality, and in some cases, aesthetics. Substitution requests shall include justification for the proposed substitution.

I. Where Owner furnished and/or existing equipment is being used in the installation, Contractor is responsible for cleaning, accessorizing, replacing consumable parts with new, and testing said equipment prior to installation.

2.2 MOUNTING EQUIPMENT

A. Install mounting hardware as required for a finished installation of all equipment, including speakers, projectors, flat panel displays, rack-mounted equipment, control panels, and others.

Where mounting hardware is not scheduled, it is nonetheless assumed to be included in the bid documents. Install accessories for equipment racks as required for a complete installation, including power distribution and covers.

B. Provide physical security measures for all audiovisual equipment in classrooms, including security mounts, screws, locking clamps, podiums, and drawers, retractable cables for wireless remote controls and audible alarms.

2.3 PROJECTION SCREENS

A. Projection screens shall:

1. Have 16:10 aspect ratio
2. Have controlled screen return for image width <120”
3. Be electrically raised/lowered for image width ≥120”

B. Sizing

1. Minimum projection screen image width shall be 96”
2. Projection screen images shall be sized such that the image height is greater than or equal to the distance to the least favored viewer divided by 5, except where limited by room architecture. If room architecture limits projection screen size, coordinate with PSU OIT-ITS, architect or engineer for direction.
3. Bottom of projected image shall be no lower than 42” above finished floor

2.4 WIRING AND CABLE

A. Provide wiring and cable from the following manufacturers, as appropriate for the installation

ID	CABLE TYPE	MANUFACTURER	MODEL
70V	70V Speaker Wire	LIBERTY	20-2C-TTPSH
8Ω	8Ω	LIBERTY	1x-2C
COMP	Composite Video	LIBERTY	RG59-CCTV
DP	Display Port	LIBERTY	E-DPM
HDBT	HD BaseT	COVIDE	P-C6F-BLU
HDMI	High Definition Multimedia Inter-	LIBERTY	HDPMM
LA	Line Level Audio	LIBERTY	20-2C-SH
MIC	Microphone Level Audio	LIBERTY / GEPCO	MP1201
NET	Network Cable	LIBERTY	24-4P-L6
POE	Power Over Ethernet Network	LIBERTY	24-4P-L6
RGBHV	Red/Green/Blue/Horiz/Vert	LIBERTY	RGB5C-25-CMP

ID	CABLE TYPE	MANUFACTURER	MODEL
RS	RS232	LIBERTY	24-2P-485
SA	Stereo Line Level Audio	LIBERTY	22-2P-INDSH
USB	Universal Serial Bus	LIBERTY	E-USB3x

PART 3 - EXECUTION

3.1 COORDINATION

A. Interface and coordinate the work of this section with that of other trades and examine drawings and specifications of other trades including mechanical, electrical, telecommunications, architectural, and structural for construction details and coordination.

B. Confirm exact installation location of all devices with Owner / Architect / interior designer prior to rough-in, including, but not limited to equipment installed in front of house spaces, equipment installed in custom assemblies, and equipment installed or routed through millwork / casework.

C. Coordinate layout and installation of system components and suspension system with other construction that penetrates ceilings or is supported by them, including, but not limited to, light fixtures, HVAC equipment, fire-suppression system, and partition assemblies. This includes coordination to confirm moving objects have a clear path of travel and confirmation that projected image paths are clear from obstruction.

D. Coordinate with architectural and structural to reinforce walls where audiovisual equipment is scheduled for mounting. Design for actual equipment weight with a 2x safety factor, minimum 100 lbs. Coordinate these reinforcements with division 26 and 27 and PSU OIT-ITS and facilities to ensure power and data services are accounted for.

3.2 NETWORKING

A. Where Owner provided active and passive networking equipment is used as a part of the audiovisual installation, coordinate with Owner's representatives to ensure said networking equipment meets or exceeds specifications and is configured as required by the manufacturers of the audiovisual equipment that will reside on the network.

B. Coordinate with data/telecom Contractor to combine pathways for networking and low-voltage category cabling where allowable.

3.3 CUSTOM SOFTWARE / USER INTERFACE

A. Where indicated in the RFP, ITB, or elsewhere in the project documents, that the Contractor's scope will include system programming, adhere to the following requirements:

1. Provide a unified User Interface (UI) throughout the project with consistent design language throughout.

2. The UI should be consistent for all systems, even where different touch panel models are used.

3. Provide color printouts of all UI pages and popups for review. Coordinate with owner for audiovisual control system user interfaces, including owner's branding as required, and obtaining final approval from owner for control system UI screens. Approval shall be by signed affidavit.

3.4 INSTALLATION OF RACEWAYS

A. Coordinate raceways with Electrical Contractor (EC) prior to rough-in. This includes providing detailed conduit, box, and raceways requirements to EC with sufficient time for procurement of materials, coordination with other trades, etc. with no delay in the overall construction schedule.

B. Power, signal and control wiring for audiovisual systems shall each be routed in dedicated conduits, unless otherwise noted.

C. Where conduit pathways are installed with spare capacity, provide pullstring to aid in future cable installation.

D. Where spare conduit pathways are provided, provide pullstring or mule tape to aid in future cable installation.

E. Label each end of conduit to indicate location of other end.

F. Classrooms

1. Provide wallbox at front corner of room near teaching station, maximum 3'-0" from corner. Provide pathways to wallbox:

a. (1) 1" conduit for audio and video cables to flat panel display / projector location

b. (1) ¾" conduit stub to ceiling space for speaker level audio cabling. Where ceilings are open to structure, or in other cases where speaker cable runs are visible, provide ¾" conduit pathways for entirety of cable run.

c. (1) ¾" conduit from branch panel for line voltage
d. (1) 1" conduit from IDF for network cabling

2. Provide wall boxes for flat panel displays. Provide pathways to wall box:

a. (1) 2" conduit to teaching station wallbox
b. (1) ¾" conduit for line voltage
c. (1) 1" conduit for network cabling

3. Provide ceiling boxes for projectors. Provide pathways to ceiling box:

a. (1) 2" conduit to teaching station wallbox
b. (1) ¾" conduit for line voltage
c. (1) 1" conduit for network cabling

3.5 WIRING METHODS

A. Wiring Method: Unless otherwise noted, in "front of house" spaces, wire and cable pathways shall be concealed in accessible ceilings, walls, and floor. Reference drawing details, if provided in the project documents, and coordinate with Architect to ensure desired aesthetic is maintained. Wire and cable to be supported independently of other systems or work by other trades, in a means acceptable to NEC requirements.

B. Wiring within Enclosures: Bundle, lace, and train cables to terminal points with only the necessary excess and without exceeding manufacturer's limitations on bending radii. Provide proper cable slack and management within slide-out and rotating racks to allow for maintenance access while system is still operational, without damaging cables. Where possible, use hook-and-loop type cable ties, not zip-ties.

C. Use hard plastic spiral wrap for cable bundles from wall or floor outlets to podium/lecterns, conference room table pop-up boxes, etc. or anywhere cabling is exposed to potential damage by end-users. Cloth mesh type cable wrap is not accessible.

3.6 INSTALLATION OF CABLES

A. General Cable Installation Requirements:

1. Terminate conductors; no cable shall contain un-terminated elements. Make terminations only at outlets and terminals.

2. Secure and support cables at intervals not exceeding 30 inches and not more than 6 inches from cabinets, boxes, fittings, outlets, racks, and terminals. Wire and cable to be

supported independently of other systems or work by other trades, in a means acceptable to NEC requirements.

3. Do not install bruised, kinked, scored, deformed, or abraded cable. Do not splice cable between termination, tap, or junction points. Remove and discard cable if damaged during installation and replace it with new cable.

4. Maintain maximum separation from line voltage conductors. Where line voltage conductors must cross signal cabling, cross at right angles.

B. Cable Labeling: Affix permanent machine printed labels to all cables in the audiovisual system, including power cables. Barcode labels are acceptable, but must also be accompanied by a text label readable without machine assistance. Text height shall be minimum 2.5mm, and label shall be within 1-12 inches of termination, the end of unterminated cable, or the exit of cable jacketing or strain-relief. Cable labeling shall correspond with cable schedule and shop drawings. Label cabling in accordance with Infocomm F501.01:2015

3.7 WIRELESS SYSTEMS

A. Confirm frequency range of specified wireless systems and equipment is appropriate for local regulations and is free from interference. Coordinate licensing for wireless systems as required.

B. Where multiple wireless systems are present, coordinate frequency ranges to prevent interference between systems.

C. Provide remote antenna(s), mounting, cabling and appurtenances as required for wireless transmitters/receivers as needed to ensure wireless system performance is free from dropouts, bad reception, static, and interference.

3.8 INSTALLATION

A. Equipment shall be mounted firmly in place with permanent hardware adequate to support the equipment with a 3x weight multiplier safety factor. Fixed equipment shall be braced for seismic activity as required by the local jurisdiction.

B. Wall-Mounted Outlets: Flush mounted unless otherwise noted in project documents. Where installing flush-mounted outlets is not possible, seek approval for surface-mounted devices from Architect, Engineer, or PSU OIT personnel.

C. Finishes: Coordinate finishes with Architect for exposed equipment, including speakers, wallplates, etc.

D. Provide accessories, backboxes, pathways, mounting hardware, decorative trim, escutcheons cabling, and ancillary equipment to provide a complete and functioning system as outlined in these specifications and project drawings.

3.9 SYSTEM PERFORMANCE CRITERIA

A. Perform tests and measurements in accordance with AV9000:2011 Quality Management System for the Audio Visual Technology Industry and ANSI/Infocomm 10:2013, AV Systems Performance Verification to ensure adequate system performance.

B. Measure and document system performance against the following minimum criteria. Where system performance criteria are not met, take corrective action as required to bring system performance into compliance with criteria listed here and in the referenced performance documents. Where criteria listed below and those in the referenced performance documents are in disagreement, the more stringent are in effect. Where criteria listed below and those in the reference performance documents cannot be met by no fault of the Contractor, Contractor to indicate this along with shop drawing submittals.

1. Audio

   a. Head room level: 10 dB
   b. Audio electrical SNR: ≥60 dB
   c. Audio system output level variance: ≤±1 dB
   d. Program audio signal sources should be balanced at the input stage to generate a level variance not to exceed ±1 dB
   e. The system under test shall produce a flat frequency response (+/-0.5dB) from 20 Hz to 20 kHz.
   f. Speech Transmission Index: ≥0.66
   g. Audio power amplifier channels shall not be loaded beyond their rated capacity
   h. Voice reinforcement shall be stable. No audible feedback is acceptable.
   i. Balance/adjust audio and videoconferencing microphone gains and lobes such that standard voices (60dB, 1m) at each seated conferencing position produce a signal level variance of ≤±3 dB.
   j. Audio only system latency: ≤2 ms.
   k. Total Harmonic Distortion: <1%
   l. Acoustic echo cancellation: no perceptible echo (>55dB cancellation)

2. Video

   a. Display resolution: minimum 1080p compatible
   b. Camera resolution: 1080p compatible

c. Digital displays shall be free from artifacts and faithfully display program content.
d. Confirm optimal brightness, contrast and color in displays using SMPTE source
e. Where multiple displays are visible in the same area, demonstrate color consistency throughout, where applicable.
f. Verify that displayed images are free from visible distortion
g. 0 pixel failures per display
h. Confirm even illumination across displays. No location shall be measured to be greater than +10% or -5% the average illumination.
i. Test all digital video signal chains to ensure HDCP is carried through, enabling display of protected content at all locations, U.O.N.
j. Audio/video system latency (lip sync) shall not exceed +20 ms/-40ms

3. Control, Power, Compatibility, Other

a. Ensure system components are powered up and down in sequence. Audio power amplifiers shall power up last and power down first. Control processors should never power down.
b. Ensure manufacturer's recommended cable bend radii are not exceeded.
c. Demonstrate audio and video teleconferencing compatibility with all anticipated far-end soft codecs, including, at a minimum, Google Hangouts, Skype, and Zoom.
d. Ensure control system performs listed functions as indicated and described in the contract documents while remaining synced with audiovisual system components and external system hardware and software

3.10 STARTUP SERVICE

A. Schedule: Inform PSU OIT personnel a minimum of two weeks prior to anticipated completion of system installation, so that Owner has sufficient time to schedule programming effort. This schedule shall also include a minimum three-week period for system adjustments, troubleshooting, etc. before the project's scheduled completion.

B. Perform startup service:

1. Verify that electrical wiring installation complies with manufacturer's submittal and installation requirements.

2. Complete installation and startup checks according to manufacturer's written instructions.

3. Conduct system verification tests to ensure system performs as intended. Reference "Infocomm Audiovisual Systems Performance Verification Checklist," available at

http://www.infocomm.org/cps/rde/xbcr/infocomm/CAVSP_Checklist.pdf. Indicate PASS/FAIL/NOT APPLICABLE for listed criteria and include as System Verification Test Report in Operation and Maintenance submittal. Reference section 1.

3.11 ACCEPTANCE TESTING

A. At completion of startup service and acceptance of system verification test report, schedule site visit with Engineer.

1. Make available to the Engineer the following during acceptance testing

a. Final 'as-built' drawings, shop drawings, floor plans, block diagrams, and equipment manufacturer's operation/setup manuals
b. Source and measurement media/equipment to demonstrate all functions of audiovisual systems
c. Contractor to make adjustments as determined necessary by the Engineer, including physically re-mounting/re-aligning equipment, adjusting gain, equalization, control system GUI, etc.

2. Acceptance testing can be combined with punchlist site visit.

3. Failed acceptance tests requiring rework which cannot be completed during the scheduled acceptance test visit will be grounds for non-acceptance and will require additional acceptance testing at a future date to demonstrate compliance with the project documents.

4. Additional site visits due to acceptance test failures will be the financial responsibility of the Contractor, including hourly billable rate for Engineer, actual travel costs and related expenses.

3.12 WARRANTY

A. Include all provisions of the standard manufacturer-backed warranty for each piece of equipment. Provisions shall remain in effect for a period as stated by the manufacturer. Contractor shall be an authorized service representative for all equipment supplied as part of this project unless appropriate written approval from owner has been granted prior to equipment procurement or installation. The warranty shall also cover the accuracy of technical documentation, and signal quality as specified and documented during the testing process of this project.

B. Contractor to guarantee all work installed under this specification. Make good, repair or replace, at the Contractor's own expense, any defective work, materials or parts which may show themselves within three years after final acceptance, if in the opinion of the Architect or Engineer said defect is due to imperfection in material, design, or workmanship.

C. Provide, as an itemized option, the ability to extend the terms of the warranty described above for one additional year.

3.13 ADJUSTING

A. On-Site Assistance: Engage a factory-authorized service representative to provide on-site assistance in adjusting sound levels, resetting transformer taps, and adjusting controls to meet occupancy conditions.

B. Occupancy Adjustments: When requested within 6 months of date of Substantial Completion, provide on-site assistance in adjusting system to suit actual occupied conditions. Provide up to two visits to Project during other-than-normal occupancy hours for this purpose.

3.14 DEMONSTRATION

A. Train Owner's maintenance personnel to adjust, operate, and maintain the Integrated Audio-Video Systems and Equipment. Provide video recording of this training and include in Operations and Maintenance manual on USB flash drive format.

END OF SECTION

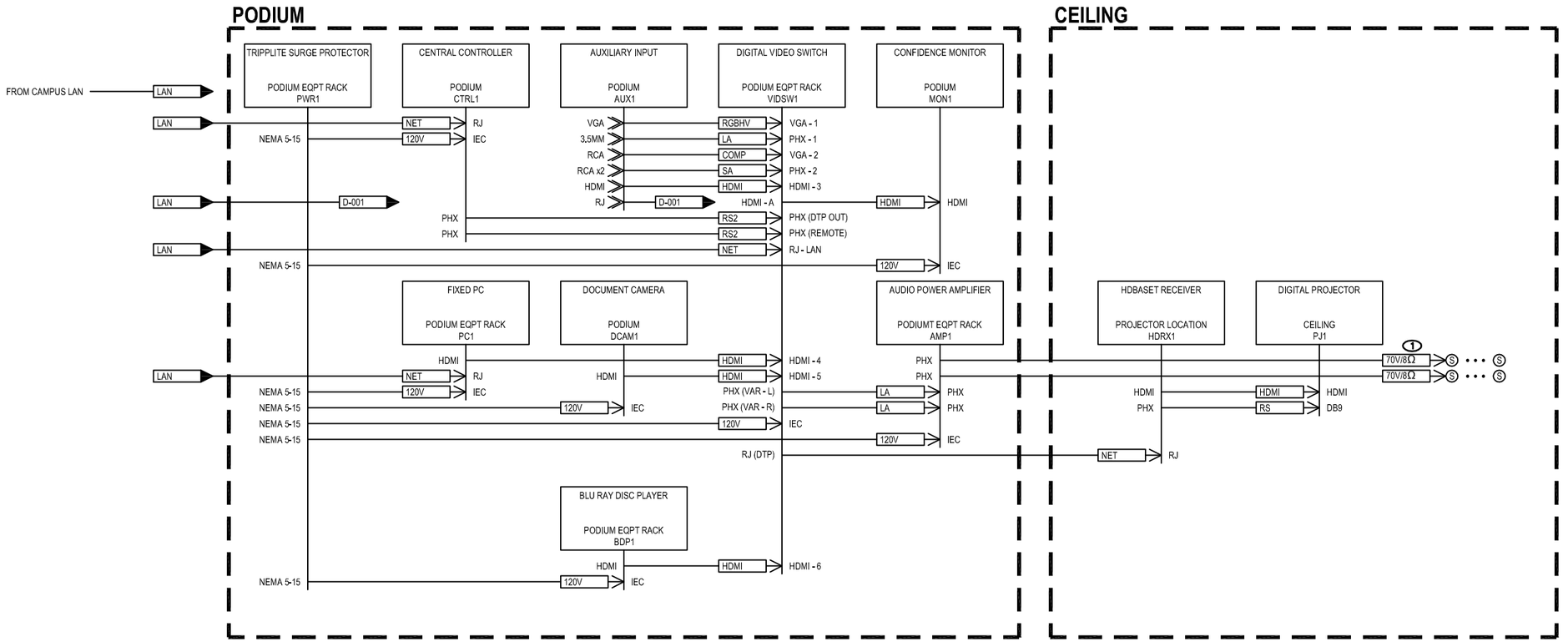

KEYED NOTES (#)

1. PROVIDE 8 OHM OR 70V SPEAKERS AND CABLING AS REQUIRED BY SYSTEM.

DWG. TITLE: AUDIOVISUAL SYSTEM BLOCK DIAGRAM
CLASSROOM – OIT
REVISION: 002
PROJECT: PORTLAND STATE UNIV. AV STANDARDS UPDATES

DATE: 2018–06–14
REF:
SCALE: N.T.S.
DWG. NO: AV103

Portland State UNIVERSITY

INTEGRATED AUDIOVISUAL SYSTEMS AND EQUIPMENT FOR CLASSROOMS

(STANDARD CLASSROOM)

PART 1 - GENERAL

1.1 RELATED DOCUMENTS

A. Drawings and general provisions of the Contract, including General and Supplementary Conditions and Division 01 Specification Sections, apply to this Section.

B. ANSI/Infocomm 1M-2009, Audio Coverage Uniformity in Enclosed Listener Areas

C. ANSI/Infocomm 10: 2013, AV Systems Performance Verification 89

D. ANSI/Infocomm 3M-2011, Projected Image Contrast Ratio

E. Infocomm F501-01:2015, Cable Labeling for Audiovisual Systems

F. NFPA 70, National Electrical Code, as adopted and amended by the local jurisdiction

G. IBC, International Building Code as adopted and amended by the local jurisdiction

1.2 SUMMARY

A. Section Includes:

1. Integrated audio and visual equipment and systems, including control equipment and systems, cabling, mounting, furniture and appurtenances.

1.3 EQUIPMENT PROVISION

A. Audiovisual system equipment shall be assumed to be furnished by Owner and installed by Contractor unless noted otherwise in project documents.

B. Audiovisual system cabling and appurtenances shall be assumed to be furnished and installed by Contractor unless noted otherwise in project documents.

C. Workmanship and equipment shall adhere to the latest referenced codes and standards of the following organizations:

1. American National Standards Institute
2. National Electrical Manufacturer’s Association
3. National Fire Protection Association
4. Underwriter’s Laboratories

1.4 QUALIFICATIONS

A. The Contractor responsible for the work of this section shall be a factory-authorized dealer, where applicable, for the major components specified. Explicit exceptions may be granted by the Engineer or by PSU OIT personnel; provide written request with the bid for services.

B. The Contractor responsible for the work of this section shall have at least one systems technician certified by Infocomm International as a Certified Technology Specialist – Installation OR a lead installer with at least 5 years verifiable field installation experience.

C. The Contractor responsible for the work of this section shall be licensed, bonded and insured to perform this work in the project location.

D. The Contractor responsible for the work of this section shall be factory certified for the programming of installed equipment, including control systems, DSPs, encoders, decoders, etc. The Owner will be responsible for system programming unless otherwise noted in the project documents.

1.5 ACTION SUBMITTALS

A. Contractor Qualifications:

1. For projects following a design-build format, where the Contractor is submitting a bid directly to the Owner, and not bidding based on an Architect/Engineer designed bid package, provide the following qualifications with bid package:

   a. Personnel: Submit project team resumes project manager, foreman, and lead on-site technician. List Infocomm or other applicable certifications for each.
   b. Project Experience: Submit a description of a minimum of three (3) project references of similar size and scope.

2. For projects following a design-bid-build format, where the Contractor is submitting a bid based on an Architect/Engineer designed bid package, provide the following qualifications with product data submittals if awarded the bid:

   a. Project Experience: Submit a description of a minimum of three (3) project references of similar size and scope.

B. Product datasheets of specific equipment that will be installed in the system. Where product datasheets show multiple items, options, or accessories, indicate on the datasheet the particular item/options/accessories that will be provided, and if the products are Owner-Furnished Owner Installed (OFOI), Owner-Furnished Contractor Installed (OFCI), or Contractor-Furnished Contractor Installed (CFCI). The intent of the requirement for Contractor to submit product data for

items furnished by Owner are to allow for review that Contractor clearly understands the delineation of scope for procurement.

C. Shop Drawings:

1. Provide audiovisual system block diagrams showing all equipment and detailed connections between components. Include designators/proposed labeling for equipment and cabling runs to correspond with those in floorplans.
2. Provide floorplans with equipment, cabling, and pathways. Indicate cabling quantities and types and pathway quantities and sizes.
3. Provide layouts/elevations of audiovisual equipment racks
4. Where indicated in a request-for-proposal (RFP), invitation-to-bid (ITB), or elsewhere in the project documents, that the Contractor's scope will include system programming, provide drawings of all touchscreen/user interface pages and popups, indicating functionality of all buttons and logical links between pages/popups.
    a. Provide overview/flowchart for the proposed layout and architecture of the control interface.
    b. Provide annotated screenshots of all proposed pages, indicating functions for each button.
    c. Indicate which pages are accessible to general users and which are accessible only to technicians/authorized users. Provide a description of system behavior during standby, startup, and shutdown.
5. Refer to System Performance Criteria in Part 3 of this specification for additional requirements.

1.6 CLOSEOUT SUBMITTALS

A. Operation and Maintenance Data - Provide operation and maintenance manual. Manual shall include job name, completion date, and names and contact information of Owner, Architect, Engineer, and Contractor. Operation and Maintenance manual shall include

1. System operation instructions for the installed system
2. Product datasheet submittal material
3. Manufacturer's operation manuals for installed equipment
4. System block diagrams
5. Schedule of manufacturer, model and serial numbers for audiovisual system equipment
6. List of consumable parts and contact information for ordering spares

7. System verification test reports
8. Video recording of Owner training session(s) – for specialty systems only.
9. Custom code created for the project, in uncompiled and editable format if programming is provided under the Contractor's scope, and not by Owner.
10. Warranty information, including warranty contract and contact information for engaging warranty service from the Contractor responsible for the work of this section, and manufacturer warranty information for installed equipment.

B. Provide PDF set of As-Built drawings showing final locations of equipment, cabling, and cable pathways. Include 1 set with the operation and maintenance data submittal for handover to Owner. 1 set shall become project record drawings for the work of this section.

1.7 SYSTEM DESCRIPTION

A. Responsibilities of this section include

1. Provision of complete and working systems as described in the project documents and drawings.
2. Complete integration with systems, architectural features and equipment provided by others.
3. Complete integration with Owner's existing AV systems and facility management software.
4. Generation of submittals and documentation as described in the project documents and drawings.
5. Provision and on-site installation of subject systems, including equipment, cabling, furniture, interfaces, infrastructure and appurtenances as required to deliver a complete system.
6. Coordination with Owner for staging, cleaning, refurbishment and delivery of Owner furnished equipment.
7. Coordination with general Contractor, Owner, audiovisual systems consultant and other disciplines.
8. Initial adjustment of the systems and provision of test equipment for system checkout and acceptance tests.
9. Training in the operation and maintenance of the systems for personnel designated by the Owner.

10. System programming where indicated in the RFP, ITB, or project documents; otherwise, programming is provided by Owner.

B. Functional Description

1. USE: Standard Classrooms will be used for standard lecture-style audio and visual presentations. A custom-made podium (with minimum 5’-6” clearance surrounding for ADA clearance) will be the primary presentation location.

2. Equipment:

a. Podium
b. Fixed PC
c. Wired auxiliary input
d. Document Camera
e. Optical Disc Player
f. Confidence Monitor
g. Audio and video processing, routing and amplification equipment
h. Control System Processor
i. Digital projector
j. Loudspeakers

1.8 COORDINATION WITH OTHER TRADES

A. Electrical, Lighting, Telecommunication

1. Where audiovisual displays (projection screens, flat panel displays, etc) are present, coordinate with lighting designer to provide additional switch zone for lights near display to minimize ambient light at display surface

2. Coordinate with division 26 to provide dedicated 20A circuits at flat panel display, projector, and podium locations.

3. Coordinate with division 27 to provide necessary data and POE drops at audiovisual equipment locations. Refer to audiovisual system block diagrams for quantity, and provide at a minimum:

a. Podium location: 6 jacks
b. Flat panel display locations: 2 jacks

B. Multiple Disciplines

1. Where audiovisual displays (projection screens, flat panel displays, etc) are present, coordinate with other trades to ensure sightlines and projection path(s) are free from ob-

struction, including architectural features, pendant light fixtures, fire sprinklers, wireless access points, etc.

2. Where projection screens and microphones are present, coordinate locations with HVAC diffusers to minimize acoustic interference and physical movement.

PART 2 - PRODUCTS

2.1 MANUFACTURERS AND EQUIPMENT

A. Provide equipment as listed in the audiovisual equipment schedules.

B. Materials and equipment installed under the work of this section must be produced by manufacturers with a minimum of 5 years' experience, and whose product literature demonstrates compliance with this section and the referenced codes and standards.

C. Manufacturers and model numbers indicated in this specification, the audiovisual equipment schedules, diagrams or elsewhere in the project documents represent PSU standard equipment. Substitutions will not be accepted without written documentation from PSU OIT personnel.

D. Materials and equipment provided shall be new and meet or exceed performance requirements of those listed in the audiovisual equipment schedules.

E. In the event that specified material or equipment has reached end of life at the time of procurement, Contractor shall seek direction from PSU OIT, Engineer, or Architect.

F. Equipment must be UL listed.

G. Unless otherwise noted, equipment accessories shall be manufactured by the manufacturer of the equipment that they accessorize.

H. Equipment substitutions must be requested in accordance with Division 01 and will be evaluated against Owner standards, performance, reliability, functionality, and in some cases, aesthetics. Substitution requests shall include justification for the proposed substitution.

I. Where Owner furnished and/or existing equipment is being used in the installation, Contractor is responsible for cleaning, accessorizing, replacing consumable parts with new, and testing said equipment prior to installation.

2.2 MOUNTING EQUIPMENT

A. Install mounting hardware as required for a finished installation of all equipment, including speakers, projectors, flat panel displays, rack-mounted equipment, control panels, and others.

Where mounting hardware is not scheduled, it is nonetheless assumed to be included in the bid documents. Install accessories for equipment racks as required for a complete installation, including power distribution and covers.

B. Provide physical security measures for all audiovisual equipment in classrooms, including security mounts, screws, locking clamps, podiums, and drawers, retractable cables for wireless remote controls and audible alarms.

2.3 PROJECTION SCREENS

A. Projection screens shall:

1. Have 16:10 aspect ratio
2. Have controlled screen return for image width <120”
3. Be electrically raised/lowered for image width ≥120”

B. Sizing

1. Minimum projection screen image width shall be 96”
2. Projection screen images shall be sized such that the image height is greater than or equal to the distance to the least favored viewer divided by 5, except where limited by room architecture. If room architecture limits projection screen size, coordinate with PSU OIT-ITS, architect or engineer for direction.
3. Bottom of projected image shall be no lower than 42” above finished floor

2.4 WIRING AND CABLE

A. Provide wiring and cable from the following manufacturers, as appropriate for the installation

ID	CABLE TYPE	MANUFACTURER	MODEL
70V	70V Speaker Wire	LIBERTY	20-2C-TTPSH
8Ω	8Ω	LIBERTY	1x-2C
COMP	Composite Video	LIBERTY	RG59-CCTV
DP	Display Port	LIBERTY	E-DPM
HDBT	HD BaseT	COVIDE	P-C6F-BLU
HDMI	High Definition Multimedia Inter-	LIBERTY	HDPMM
LA	Line Level Audio	LIBERTY	20-2C-SH
MIC	Microphone Level Audio	LIBERTY / GEPCO	MP1201
NET	Network Cable	LIBERTY	24-4P-L6
POE	Power Over Ethernet Network	LIBERTY	24-4P-L6
RGBHV	Red/Green/Blue/Horiz/Vert	LIBERTY	RGB5C-25-CMP

INTEGRATED AUDIOVISUAL SYSTEMS AND EQUIPMENT FOR CLASSROOMS

(STANDARD CLASSROOM)

ID	CABLE TYPE	MANUFACTURER	MODEL
RS	RS232	LIBERTY	24-2P-485
SA	Stereo Line Level Audio	LIBERTY	22-2P-INDSH
USB	Universal Serial Bus	LIBERTY	E-USB3x

PART 3 - EXECUTION

3.1 COORDINATION

A. Interface and coordinate the work of this section with that of other trades and examine drawings and specifications of other trades including mechanical, electrical, telecommunications, architectural, and structural for construction details and coordination.

B. Confirm exact installation location of all devices with Owner / Architect / interior designer prior to rough-in, including, but not limited to equipment installed in front of house spaces, equipment installed in custom assemblies, and equipment installed or routed through millwork / casework.

C. Coordinate layout and installation of system components and suspension system with other construction that penetrates ceilings or is supported by them, including, but not limited to, light fixtures, HVAC equipment, fire-suppression system, and partition assemblies. This includes coordination to confirm moving objects have a clear path of travel and confirmation that projected image paths are clear from obstruction.

D. Coordinate with architectural and structural to reinforce walls where audiovisual equipment is scheduled for mounting. Design for actual equipment weight with a 2x safety factor, minimum 100 lbs. Coordinate these reinforcements with division 26 and 27 and PSU OIT-ITS and facilities to ensure power and data services are accounted for.

3.2 NETWORKING

A. Where Owner provided active and passive networking equipment is used as a part of the audiovisual installation, coordinate with Owner’s representatives to ensure said networking equipment meets or exceeds specifications and is configured as required by the manufacturers of the audiovisual equipment that will reside on the network.

B. Coordinate with data/telecom Contractor to combine pathways for networking and low-voltage category cabling where allowable.

3.3 CUSTOM SOFTWARE / USER INTERFACE

A. Where indicated in the RFP, ITB, or elsewhere in the project documents, that the Contractor's scope will include system programming, adhere to the following requirements:

1. Provide a unified User Interface (UI) throughout the project with consistent design language throughout.

2. The UI should be consistent for all systems, even where different touch panel models are used.

3. Provide color printouts of all UI pages and popups for review. Coordinate with owner for audiovisual control system user interfaces, including owner's branding as required, and obtaining final approval from owner for control system UI screens. Approval shall be by signed affidavit.

3.4 INSTALLATION OF RACEWAYS

A. Coordinate raceways with Electrical Contractor (EC) prior to rough-in. This includes providing detailed conduit, box, and raceways requirements to EC with sufficient time for procurement of materials, coordination with other trades, etc. with no delay in the overall construction schedule.

B. Power, signal and control wiring for audiovisual systems shall each be routed in dedicated conduits, unless otherwise noted.

C. Where conduit pathways are installed with spare capacity, provide pullstring to aid in future cable installation.

D. Where spare conduit pathways are provided, provide pullstring or mule tape to aid in future cable installation.

E. Label each end of conduit to indicate location of other end.

F. Classrooms

1. Provide wallbox at front corner of room near teaching station, maximum 3'-0" from corner. Provide pathways to wallbox:

a. (1) 1" conduit for audio and video cables to flat panel display / projector location

b. (1) ¾" conduit stub to ceiling space for speaker level audio cabling. Where ceilings are open to structure, or in other cases where speaker cable runs are visible, provide ¾" conduit pathways for entirety of cable run.

c. (1) ¾" conduit from branch panel for line voltage
d. (1) 1" conduit from IDF for network cabling

2. Provide wall boxes for flat panel displays. Provide pathways to wall box:

a. (1) 2" conduit to teaching station wallbox
b. (1) ¾" conduit for line voltage
c. (1) 1" conduit for network cabling

3. Provide ceiling boxes for projectors. Provide pathways to ceiling box:

a. (1) 2" conduit to teaching station wallbox
b. (1) ¾" conduit for line voltage
c. (1) 1" conduit for network cabling

3.5 WIRING METHODS

A. Wiring Method: Unless otherwise noted, in "front of house" spaces, wire and cable pathways shall be concealed in accessible ceilings, walls, and floor. Reference drawing details, if provided in the project documents, and coordinate with Architect to ensure desired aesthetic is maintained. Wire and cable to be supported independently of other systems or work by other trades, in a means acceptable to NEC requirements.

B. Wiring within Enclosures: Bundle, lace, and train cables to terminal points with only the necessary excess and without exceeding manufacturer's limitations on bending radii. Provide proper cable slack and management within slide-out and rotating racks to allow for maintenance access while system is still operational, without damaging cables. Where possible, use hook-and-loop type cable ties, not zip-ties.

C. Use hard plastic spiral wrap for cable bundles from wall or floor outlets to podium/lecterns, conference room table pop-up boxes, etc. or anywhere cabling is exposed to potential damage by end-users. Cloth mesh type cable wrap is not accessible.

3.6 INSTALLATION OF CABLES

A. General Cable Installation Requirements:

1. Terminate conductors; no cable shall contain un-terminated elements. Make terminations only at outlets and terminals.

2. Secure and support cables at intervals not exceeding 30 inches and not more than 6 inches from cabinets, boxes, fittings, outlets, racks, and terminals. Wire and cable to be

supported independently of other systems or work by other trades, in a means acceptable to NEC requirements.

3. Do not install bruised, kinked, scored, deformed, or abraded cable. Do not splice cable between termination, tap, or junction points. Remove and discard cable if damaged during installation and replace it with new cable.

4. Maintain maximum separation from line voltage conductors. Where line voltage conductors must cross signal cabling, cross at right angles.

B. Cable Labeling: Affix permanent machine printed labels to all cables in the audiovisual system, including power cables. Barcode labels are acceptable, but must also be accompanied by a text label readable without machine assistance. Text height shall be minimum 2.5mm, and label shall be within 1-12 inches of termination, the end of unterminated cable, or the exit of cable jacketing or strain-relief. Cable labeling shall correspond with cable schedule and shop drawings. Label cabling in accordance with Infocomm F501.01:2015

3.7 WIRELESS SYSTEMS

A. Confirm frequency range of specified wireless systems and equipment is appropriate for local regulations and is free from interference. Coordinate licensing for wireless systems as required.

B. Where multiple wireless systems are present, coordinate frequency ranges to prevent interference between systems.

C. Provide remote antenna(s), mounting, cabling and appurtenances as required for wireless transmitters/receivers as needed to ensure wireless system performance is free from dropouts, bad reception, static, and interference.

3.8 INSTALLATION

A. Equipment shall be mounted firmly in place with permanent hardware adequate to support the equipment with a 3x weight multiplier safety factor. Fixed equipment shall be braced for seismic activity as required by the local jurisdiction.

B. Wall-Mounted Outlets: Flush mounted unless otherwise noted in project documents. Where installing flush-mounted outlets is not possible, seek approval for surface-mounted devices from Architect, Engineer, or PSU OIT personnel.

C. Finishes: Coordinate finishes with Architect for exposed equipment, including speakers, wallplates, etc.

D. Provide accessories, backboxes, pathways, mounting hardware, decorative trim, escutcheons cabling, and ancillary equipment to provide a complete and functioning system as outlined in these specifications and project drawings.

3.9 SYSTEM PERFORMANCE CRITERIA

A. Perform tests and measurements in accordance with AV9000:2011 Quality Management System for the Audio Visual Technology Industry and ANSI/Infocomm 10:2013, AV Systems Performance Verification to ensure adequate system performance.

B. Measure and document system performance against the following minimum criteria. Where system performance criteria are not met, take corrective action as required to bring system performance into compliance with criteria listed here and in the referenced performance documents. Where criteria listed below and those in the referenced performance documents are in disagreement, the more stringent are in effect. Where criteria listed below and those in the reference performance documents cannot be met by no fault of the Contractor, Contractor to indicate this along with shop drawing submittals.

1. Audio

   a. Head room level: 10 dB
   b. Audio electrical SNR: ≥60 dB
   c. Audio system output level variance: ≤±1 dB
   d. Program audio signal sources should be balanced at the input stage to generate a level variance not to exceed ±1 dB
   e. The system under test shall produce a flat frequency response (+/-0.5dB) from 20 Hz to 20 kHz.
   f. Speech Transmission Index: ≥0.66
   g. Audio power amplifier channels shall not be loaded beyond their rated capacity
   h. Voice reinforcement shall be stable. No audible feedback is acceptable.
   i. Balance/adjust audio and videoconferencing microphone gains and lobes such that standard voices (60dB, 1m) at each seated conferencing position produce a signal level variance of ≤±3 dB.
   j. Audio only system latency: ≤2 ms.
   k. Total Harmonic Distortion: <1%
   l. Acoustic echo cancellation: no perceptible echo (>55dB cancellation)

2. Video

   a. Display resolution: minimum 1080p compatible
   b. Camera resolution: 1080p compatible

c. Digital displays shall be free from artifacts and faithfully display program content.
d. Confirm optimal brightness, contrast and color in displays using SMPTE source
e. Where multiple displays are visible in the same area, demonstrate color consistency throughout, where applicable.
f. Verify that displayed images are free from visible distortion
g. 0 pixel failures per display
h. Confirm even illumination across displays. No location shall be measured to be greater than +10% or -5% the average illumination.
i. Test all digital video signal chains to ensure HDCP is carried through, enabling display of protected content at all locations, U.O.N.
j. Audio/video system latency (lip sync) shall not exceed +20 ms/-40ms

3. Control, Power, Compatibility, Other

a. Ensure system components are powered up and down in sequence. Audio power amplifiers shall power up last and power down first. Control processors should never power down.
b. Ensure manufacturer's recommended cable bend radii are not exceeded.
c. Demonstrate audio and video teleconferencing compatibility with all anticipated far-end soft codecs, including, at a minimum, Google Hangouts, Skype, and Zoom.
d. Ensure control system performs listed functions as indicated and described in the contract documents while remaining synced with audiovisual system components and external system hardware and software

3.10 STARTUP SERVICE

A. Schedule: Inform PSU OIT personnel a minimum of two weeks prior to anticipated completion of system installation, so that Owner has sufficient time to schedule programming effort. This schedule shall also include a minimum three-week period for system adjustments, troubleshooting, etc. before the project's scheduled completion.

B. Perform startup service:

1. Verify that electrical wiring installation complies with manufacturer's submittal and installation requirements.

2. Complete installation and startup checks according to manufacturer's written instructions.

3. Conduct system verification tests to ensure system performs as intended. Reference "Infocomm Audiovisual Systems Performance Verification Checklist," available at

http://www.infocomm.org/cps/rde/xbcr/infocomm/CAVSP_Checklist.pdf. Indicate PASS/FAIL/NOT APPLICABLE for listed criteria and include as System Verification Test Report in Operation and Maintenance submittal. Reference section 1.

3.11 ACCEPTANCE TESTING

A. At completion of startup service and acceptance of system verification test report, schedule site visit with Engineer.

1. Make available to the Engineer the following during acceptance testing

a. Final 'as-built' drawings, shop drawings, floor plans, block diagrams, and equipment manufacturer's operation/setup manuals
b. Source and measurement media/equipment to demonstrate all functions of audiovisual systems
c. Contractor to make adjustments as determined necessary by the Engineer, including physically re-mounting/re-aligning equipment, adjusting gain, equalization, control system GUI, etc.

2. Acceptance testing can be combined with punchlist site visit.

3. Failed acceptance tests requiring rework which cannot be completed during the scheduled acceptance test visit will be grounds for non-acceptance and will require additional acceptance testing at a future date to demonstrate compliance with the project documents.

4. Additional site visits due to acceptance test failures will be the financial responsibility of the Contractor, including hourly billable rate for Engineer, actual travel costs and related expenses.

3.12 WARRANTY

A. Include all provisions of the standard manufacturer-backed warranty for each piece of equipment. Provisions shall remain in effect for a period as stated by the manufacturer. Contractor shall be an authorized service representative for all equipment supplied as part of this project unless appropriate written approval from owner has been granted prior to equipment procurement or installation. The warranty shall also cover the accuracy of technical documentation, and signal quality as specified and documented during the testing process of this project.

B. Contractor to guarantee all work installed under this specification. Make good, repair or replace, at the Contractor's own expense, any defective work, materials or parts which may show themselves within three years after final acceptance, if in the opinion of the Architect or Engineer said defect is due to imperfection in material, design, or workmanship.

C. Provide, as an itemized option, the ability to extend the terms of the warranty described above for one additional year.

3.13 ADJUSTING

A. On-Site Assistance: Engage a factory-authorized service representative to provide on-site assistance in adjusting sound levels, resetting transformer taps, and adjusting controls to meet occupancy conditions.

B. Occupancy Adjustments: When requested within 6 months of date of Substantial Completion, provide on-site assistance in adjusting system to suit actual occupied conditions. Provide up to two visits to Project during other-than-normal occupancy hours for this purpose.

3.14 DEMONSTRATION

A. Train Owner's maintenance personnel to adjust, operate, and maintain the Integrated Audio-Video Systems and Equipment. Provide video recording of this training and include in Operations and Maintenance manual on USB flash drive format.

END OF SECTION

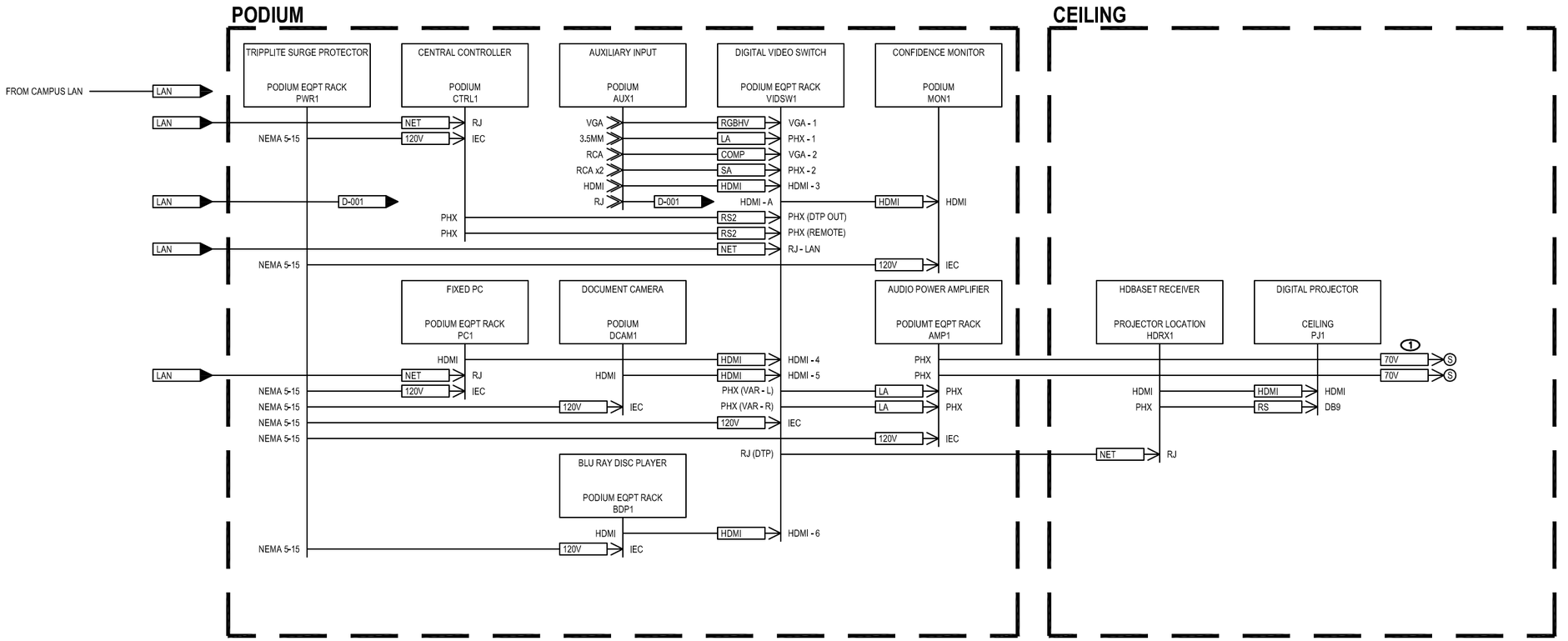

KEYED NOTES (#)

1. PROVIDE 8 OHM OR 70V SPEAKERS AND CABLING AS REQUIRED BY SYSTEM.

DWG. TITLE: AUDIOVISUAL SYSTEM BLOCK DIAGRAM
CLASSROOM – STANDARD

REVISION: 003

PROJECT: PORTLAND STATE UNIV. AV STANDARDS UPDATES

DATE: 2018–06–22

REF:

SCALE: N.T.S.

DWG. NO: **AV104**

Portland State UNIVERSITY